PART TWO

DEACTIVATION, CORRECTIVE MAINTENANCE, AND STORAGE

CHAPTER 11

NORMAL DEACTIVATION PROCEDURES

Section I. GENERAL

11-1. Introduction

This chapter contains the normal deactivation procedures for assembled missiles. Missiles must be deactivated in the appropriate areas, following the procedures prescribed in paragraphs 11-2 through 11-37. The two safety-and-arming devices, the propulsion arming lanyard, the four rocket motor igniters, and the rocket motor initiators are removed. The location for removal of batteries has options indicated in the procedures (para 11-5 through 11-7).

After the missile has been disarmed, the missile is either transported to the service area on trailer M529, or the missile body is separated from the rocket motor cluster and each component is transported to the service area. If trailer M529 is used, the missile body is separated from the cluster in a prescribed area. There, all components are deactivated and prepared for shipment, storage, or removal to repair shops. All loose hardware is placed in appropriate containers for shipment or storage.

11-2. Deactivation Sequence

To insure the maximum safety of personnel and equipment, the deactivation procedures must be performed in the exact sequence prescribed in paragraphs 11-3 through 11-37.

11-3. Handling Explosives

Personnel handling explosive components of the missile must be familiar with all applicable safety regulations. Published rules for the use and care of tools must be observed. Fire fighting equipment must be kept in good working order and readily available. Spark-proof safety tools and equipment are not required for normal missile assembly and disassembly operations. The installation or removal of the rocket motor igniter, using the authorized spanner wrench, is considered normal missile operation.

Section II. PRELIMINARY PROCEDURES

11-4. Disarming the Missile

WARNING: The missile contains explosives. All applicable safety regulations will be strictly enforced. Operations involving the handling of explosive items will be performed only in the areas specifically designated. These areas will meet quantity distance requirements based upon the type and quantity of explosives involved. Where adjacent missiles are a hazard, a barrier will be provided for protection. Do not perform handling operations during electrical storms.

WARNING: Handling operations of the missile will be supervised by qualified explosives personnel who thoroughly understand the hazards and risks involved. A minimum number of personnel will be permitted on or near the work location, and the quantities of explosive materials will be kept to a minimum. Spilled explosive materials will be immediately removed, and the area thoroughly decontaminated before work continues.

WARNING: Explosive components containing electrical wiring must be protected at all times from stray voltages or induced electrical currents. A ground strap with a maximum ground resistance of 20 ohms must be attached from the component to a grounding stake. A CO_2 fire extinguisher will be provided. Extreme care will be exercised when handling explosive components whose size or weight makes handling difficult.

WARNING: If the missile is being deactivated on a launcher, insure that the launcher control-indicator (LCI) is in the initial operating condition; the missile HEAT switch is set to OFF; the TEST-FIRE switch is in the TEST position; and the main power switch in the launcher-power distribution box is set to OFF.

a. Release the captive stud fasteners that secure the ARMING MECHANISM access cover plate (fig. 10-11) and open the cover plate.

Warning: Exercise care in handling each safety-and-arming device. Always handle with the inspection window facing the handler and the base pointing away from the body.

b. Remove each safety-and-arming device by grasping the device and pulling out.

Note. If trailer M529 is to be used, store the two safety-and-arming devices, removed in step *b* above, in the explosive storage container on the trailer as indicated in figure 9-14, and omit step *c* and *d* below.

c. Install a bail on each safety-and-arming device that is to be returned to the supply system.

d. Repack and store the two safety-and-arming devices in the area designated.

e. Close the access cover plate, and secure with the captive stud fasteners.

f. Inspect the rocket motor igniter cable assembly (fig. 10-10) to insure that the shorting connector is properly installed on P109A.

g. Disconnect connectors P1X and P72A (fig. 9-19) from connectors J1G and J72D on the launcher erecting beam.

CAUTION: Place connectors P1X and P72A in the dummy connectors, taking care not to touch the pins to the adjoining metal surfaces.

Warning. When connecting or disconnecting connectors P1X or P72A, the main power BKR, Missile Battery heat, and Booster Heat circuit breakers at the launcher power distribution box for the appropriate launcher must be set to off.

h. Remove the flathead screws (2, fig. 11-1), and remove the IGNITOR access cover plate.

i. Disconnect connectors P162 (3, fig. 5-15) and P163 (1) from the missile rocket motor initators.

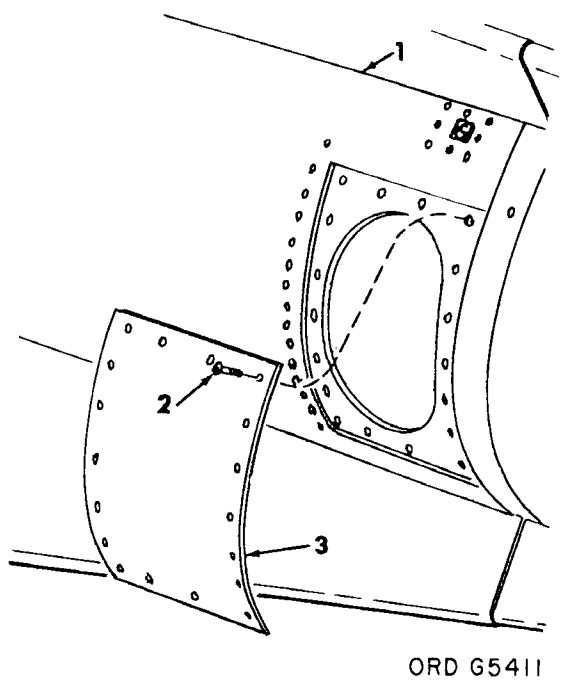

1—Rear body section
2—1 / 4 x 23 / 32 fl-hd screw (18)
3—IGNITOR access cover plate

Figure 11-1. Removal and installation of the IGNITOR access cover plate.

j. Install the shorting connectors (5) on the two missile rocket motor initiators.

k. Remove the two initiators from the forward end of the rocket motor subassembly.

l. Install the two shipping plugs (fig. 5-7) with gaskets in the receptacles from which the initiators were removed, and torque to 250 pound-inches.

m. Store the two initiators removed in step *k* above in the explosive storage container on trailer M529, as indicated in figure 9-14, or place in the designated storage area.

n. Install the flathead screws (2, fig. 11-1) to secure the IGNITOR access cover plate to the rear body section. Torque the screws to the value given in table 15-9.

o. Remove the flat washers (2, fig. 10-6) and the nut (3) securing the propulsion arming lanyard assembly (5) to the lanyard mounting bracket (4).

CAUTION: The trigger operating plug (14) is secured in position with an aluminum rivet (13). If more than finger pressure is required to disengage the threads of the eyebolt (12) from the threads in the trigger operating plug, refer the item to support unit for maintenance.

p. Remove the eyebolt from the trigger operating plug in the lanyard receptacle (15).

q. Install the shipping plug (11) into the trigger operating plug.

Note. If trailer M529 is to be used, store the lanyard assembly removed in *p* above in the explosive storage container on the trailer as indicated in figure 9-14, and omit *r* below.

r. Release elevon locks (fig. 9-12) by pulling the lock release levers and rotaing the elevon lock forks toward the rocket motor cluster.

s. Disconnect the rocket motor igniter cable assembly connector (D, fig. 10-9) from one rocket motor igniter connector. Immediately install the rocket motor igniter shorting connector.

t. Repeat *s* above for the three remaining igniters.

Note. Place igniter cable assembly connectors P1, P2, P3, and P4 between the thrust structure pedestal and base to preclude damage to the connectors.

CAUTION: Install the igniter receptacle shipping closures (A) with gaskets immediately after removing the rocket motor igniters, as the propellant grains absorb moisture if left exposed to the atmosphere.

u. Using the spanner wrench, remove one rocket motor igniter (B, fig. 10-9) and install the igniter receptacle shipping closure and gasket (A).

v. Repeat *u* above for the three remaining igniters. Store the igniters in a suitable area

Note. If trailer M529 is to be used, place the igniters removed in *u* and *v* above in shipping containers, and store in the explosive storage container on the trailer as indicated in figure 9-14.

11-5. Removal of the Guidance Set Storage Battery (Missiles 10206 through 11935 and 13001 through 13683)

CAUTION: Before disconnecting or connecting the battery, make certain that the section control-indicator controls and switches are in the initial operating condition; the MISSILE HEAT switch is set to OFF; connectors P1X and P72A are installed in the dummy connectors; and connectors P104A and P105A are properly installed in connectors J104A and J105A, respectively.

a. Remove the flathead screws (7 and 9, fig. 3-21) that secure the equipment section access cover plate on the left side of the missile body, and remove the cover plate.

b. Disconnect connector J510 on the battery wiring harness from connector P510 on the missile distribution box.

WARNING: Connector J510 should be taped to prevent damage due to accidental shorting of the connector.

c. Remove the truss-head screw, lockwasher, and flat washer that secure the loop clamp to the bracket on the missile structure.

d. Loosen the hose clamp on the battery drain hose, and remove the battery drain hose from the vent in the cover of the missile battery box.

e. Remove the truss-head screws from the two battery box straps that secure the missile battery box to the battery box support.

f. Carefully remove the missile battery box from the battery box support.

CAUTION: Exercise care to prevent damage to wires while performing *g* below.

g. Remove the battery box cover (24, fig. 10-1) from the top of the battery tray (13).

CAUTION: Care must be taken to insure that the red (positive) lead (7) and the black (negative) lead (8) terminal of the storage battery leads do not touch each other, or they will fuse together. The terminal protector tips or tape immediately after disconnecting.

h. Remove the two hexagon nuts (3 or 19), lockwasher (2 or 18), and flat washers (1 or 17) that secure the guidance set storage battery leads to the terminal board (20 or 26).

i. Remove the guidance set storage battery (11) from the battery tray.

CAUTION: Exercise care to prevent damage to wires while performing *j* below.

j. Place the battery box cover on the battery tray.

k. Place the missile battery box on the battery box support.

l. Install the two straps that secure the missile battery box to the battery box support with the truss-head screws.

m. Connect the battery drain hose to the vent in the cover of the battery box. Tighten the hose clamp.

n. Secure the loop clamp to the bracket on the missile structure with the truss-head screw, lockwasher, and flat washer.

o. Connect connector J510 on the battery wiring harness to connector P510 on the missile distribution box.

p. Install the equipment section access cover plate (8, fig. 3-21) in position on the left side of the missile body, and secure with the flathead screws. Torque and the screws to the value given in table 15-9.

11-6. Removal of the Squib Batteries (Missiles 13684 and Subsequent)

CAUTION: Before disconnecting or connecting the squib battery, make certain that the section control-indicator controls and switches are in the initial operating condition; the MISSILE HEAT switch is set to OFF; connectors P1X and P72A are installed in the dummy connectors; and connectors P104A and P105A are properly installed in connectors J104A and J105A respectively.

Note. If the missile is being deactivated for the purpose of transportation to another area, para 11-6 may be omitted.

a. Remove the flathead screws (7 and 9, fig. 3-21); remove the equipment section access cover plate on the left side of the missile body.

b. Disconnect connector P541 (2, fig. 10-3) guidance set squib battery (7). Install the connector cap.

c. Remove the hose clamp (5) and battery drain hose (3) from the battery vent (6).

d. Remove the four fillister-head screws (8) and flat washers (9) that secure the guidance set squib battery (7) to the missile battery rack (10), and remove the battery.

e. Install the equipment section access cover plate (8, fig. 3-21) on the left side of the missile body, and secure the cover plate with the flathead screws. Torque the screws to the value given in table 15-9.

11-7. Removal of the HPU Squib Battery

WARNING: If the HPU battery has been activated, the ventilator assembly will contain a caustic solution injurious to personnel and equipment and must be handled with caution. Do not remove the ventilator assembly from the battery. The ventilator assembly must not be reused.

Note. If the missile is being deactivated for the purpose of transportation to another area, para 11-7 may be omitted.

a. Remove the flathead screws (3 and 10, fig. 3-21) that secure the equipment section access cover plate on the right side of the missile body, and remove the cover plate.

b. Disconnect connector P544 (2, fig. 10-4) from connector J544. Immediately install the shorting dummy connector J544.

c. Disconnect the coupling nut (7, fig. 12-47) from the HPU squib battery (3).

Note. The coupling nut and sleeve (8) will remain on the tube (6).

d. Remove the two hexagon nuts (5), four flat washers (2), and two truss-head screws (1) securing the ventilator assembly (4) to the HPU squib battery, and remove the ventilator assembly.

e. Pull back the cable nipple (6, fig. 12-43), and remove the hexagon nut (9), lockwasher (8), and flat washer (7) securing the positive lead (10) to the positive terminal stud (11), and remove the lead.

f. Repeat *e* above to disconnect the negative lead (5).

g. Remove the hexagon nuts (11, fig. 12-47) flat washers (10) and hexagon-head bolts (9) securing the HPU squib battery (3) to the missile structure, and remove the battery.

h. Position the shipping support (3, fig. 7-17) on the missile structure, and install the panhead screw (8) and flat washers (9).

i. Position the shipping support (13) on the missile structure, and install the panhead screws (11) and flat washers (12).

j. Insert the two spacers (7) between the support brackets (4). Insert the end of the tube (10) into the grommet (14), and position the ventilator assembly (5) on the shipping supports. Install the truss-head screws (6), flat washers (2), and hexagon nuts (1).

k. Install the equipment section access cover plate (2, fig. 3-21) in position on the right side of the missile body, and secure with the flathead screws (3 and 10). Torque the screws to the value given in table 15-9.

Section III. REMOVAL OF THE MISSILE FROM THE LAUNCHING AREA, USING GUIDED MISSILE LOW-BED TRAILER M529

11-8. (Deleted)

WARNING: The missile contains explosives. All applicable safety regulations will be strictly enforced. Operations involving the handling of explosive items will be performed only in the areas specifically designated. These areas will meet quantity distance requirements based upon the type and quantity of explosives involved. Where adjacent missiles are a hazard, a barrier will be provided for protection. Do not perform handling operations during electrical storms.

WARNING: Handling operations of the missile will be supervised by qualified explosives personnel who thoroughly understand the hazards and risks involved. A minimum number of personnel will be permitted on or near the work location, and the quantities of explosvie materials will be kept to a minimum. Spilled explosive materials will be immediately removed, and the area thoroughly decontaminated before work continues.

WARNING: Explosive components containing electrical wiring must be protected at all times from stray voltages or induced electrical currents. A ground strap with a maximum ground resistance of 20 ohms must be attached from the component to a grounding stake. A CO_2 fire extinguisher will be provided. Extreme care will be exercised when handling explosive components whose size or weight makes handling difficult.

When the missile on the launching-handling rail is to be transported on guided missile low-bed trailer M529, the two safety and arming devices, the two missile rocket motor initiators, the propulsion arming lanyard assembly, and the four rocket motor igniters are removed and stored in the trailer explosive storage container (fig. 9-14).

WARNING: Before continuing with the deactivation procedures, check that the preliminary procedures in paragraphs 11-4 and 11-5 have been performed.

11-9. Removal of the Missile from the Launcher, Using Guided Missile Low-Bed Trailer M529

a. Release the stop-and-position handle (fig. 9-19) on the launching-handling rail, and position the launching-handling rail at the end of the loading rack (fig. 9-9).

b. Loosen the nut with bar (1, fig. 9-18); raise the pipe to the LOAD position; and tighten the nut with bar.

c. Refer to TM 9-2330-255-14 for missile loading procedures.

d. Move trailer M529 to the appropriate area.

e. (Deleted)

f. (Deleted)

g. Remove missile holddown arm assemblies as prescribed in TM 9-2330-255-14.

Section IV. REMOVAL OF THE MISSILE BODY FROM THE LAUNCHING-HANDLING RAIL

WARNING: Before continuing with the deactivation procedures, check that the preliminary procedures in paragraphs 11-4 through 11-7 have been performed.

WARNING: The missile body contains explosives. All applicable safety regulations will be strictly enforced. Operations involving the handling of explosive items will be performed only in the areas specifically designated. These areas will meet quantity-distance requirements based upon the type and quantity of explosives involved. Where adjacent missiles are a hazard, a barrier will be provided for protection. Do not perform handling operations during electrical storms.

WARNING: Handling operations of the missile body will be supervised by qualified explosives personnel who thoroughly understand the hazards and risks involved. A minimum number of personnel will be permitted on or near the work location, and the quantities of explosive materials will be kept to a minimum. Spilled explosive materials will be immediately removed, and the area thoroughly decontaminated before work continues.

WARNING: Explosive components containing electrical wiring must be protected at all times from stray voltages or induced electrical currents. A ground strap with a maximum ground resistance of 20 ohms must be attached from the component to a grounding stake. A CO_2 fire extinguisher will be provided. Extreme care will be exercised when handling explosive components whose size or weight makes handling difficult.

11-10. Removal of the Missile Body

Note. If guided missile low-bed trailer M529 has been used to transport the missile to the assembly area, omit step *a* below.

Note. Due to differences between site configurations, it may be necessary to remove the adjoining loading racks before performing paragraphs 11-10 and 11-12.

a. Position the launching-handling rail on any launcher (except elevator-mounted launchers) or at the end of the loading racks for separation of the missile body from the rocket motor cluster.

Note. Perform step *b* below for missiles 13001 and subsequent.

b. Disconnect the hose assembly (3, fig. 9-18) form the cooling access door.

WARNING: Exercise extreme care when releasing the spring-loaded retaining pin as injury to personnel may result when the hook latch snaps into position.

c. Pull back the spring-loaded retaining pin (B3, fig. 9-22) to release the hook latch on the shear plug.

d. Disconnect missile umbilical cable connectors P104A (6, fig. 9-21) and P105A (9) from connectors J104A (5) and J105A (10), respectively; remove the umbilical cable.

e. Position the missile umbilical cable (fig. 9-20) on the missile body; secure with the clamp and wing nut.

e.1. Release the elevon locks (fig. 9-12) by pulling the lock release levers and rotating the elevon lock forks toward the rocket motor cluster.

f. Perform the adjustments prescribed in steps (1) through (3) below on the launching-handling rail.

(1) Loosen the locknut (9, fig. 9-8) on the missile-away switch arm adjusting bolt (8), and retract the bolt until flush with the missile-away switch arm (7).

(2) Loosen the locknut (3) on the stop bolt (4) on the left side of the launching-handling rail (5). Turn the stop bolt counterclockwise until the end of the bolt is flush with the missile-away switch arm.

(3) Loosen the locknut on the stop bolt on the right side of the launching-handling rail, and turn the bolt counterclockwise until the end of the stop bolt is flush with the forward end of the stop block (2).

g. Remove the plugs (15, fig. 9-17) from holes on the top and sides of the missile body.

WARNING: Check that the threads and bolt holes in the missile body are in good condition.

h. Position the handling ring segments on the top and sides of the missile body; secure with captive bolts, and tighten to the torque value given in table 15-9.

CAUTION: Make certain a hoisting device capable of lifting 6,000 pounds is used to remove the missile body from the launching-handling rail.

i. Prepare to lift the missile body (par. 9-1*b* through *l*).

j. Assure that the APS SERVICE DOOR (11, fig. 3-21) is open for missile with an APS.

k. Raise the missile body hoist beam (fig. 9-17) slightly to apply tension to the bracket assembly and lift chain.

l. Loosen the knurled knobs (16, fig. 9-13) on the holder (17).

m. Remove the safety wire (8) from the internal wrenching bolt or thumb-screw (7) on the forward side of the yoke assembly (13). Turn the bolt or thumbscrew counter-clockwise until flush with the rear surface of the yoke assembly.

n. Remove the hexagon nut (1), lockwashers (2), and shear bolt (4) from the yoke assembly.

o. Pull the yoke assembly forward to disengage the holder (12) from the T-hook adapter (11).

p. Slowly guide the missile body (fig. 9-16) out of the rocket motor thrust ring assembly until the missile body is clear of the rocket motor cluster.

q. Lift the missile body clear of the launching handling rail.

r. Remove the plugs (view B, fig. 9-15) from the handling ring segment mounting bolt holes on the bottom of the missile body.

s. Position the handling ring segment on the missile body; secure with the captive bolts; and tighten the captive bolts to the torque value given in table 15-9.

t. Position the rear roll ring (view A) on the missile body and secure with the captive bolts.

11-11. Transporting the Missile Body to the Service Area

Note. If guided missile low-bed trailer M529 has been used to transport the missile, perform *a*(1) through (3) below and omit the remainder of the paragraph. The missile body truck (fig. 9-1) is used to transport the missile body over smooth terrain (or paved surfaces). When the terrain is rough, the missile body must be moved on the missile body or rocket motor cluster transporter adapter (fig. 9-2) mounted on the transporter trailer.

a. Transporting the Missile Body on the Missile Body Truck.

(1) Position the missile body (fig. 9-1) on the missile body truck.

CAUTION: Make certain the rear roll ring is fully seated in the groove of the wheel as shown in figure 3-13.

(2) Install the lock pin to secure the rear roll ring to the forward cradle of the missile body truck. Install the two self-locking pins to secure the lower handling ring segment to the rear cradle on the missile body truck.

(3) Remove the missile body hoist beam self-locking eyehook and bracket assembly (par. 9-1*p* through *w*).

(4) Move the missile body truck to the service area.

b. Transporting the Missile Body on the Transporter Adapter Mounted on the Transporter Trailer.

(1) Position the missile body (fig. 9-2) on the transporter adapter.

(2) Secure the missile body to the transporter adapter, and remove the missile body hoist beam (par. 9-1*o* through *w*).

(3) Move the transporter adapter to the service area.

Section V. REMOVAL OF THE ROCKET MOTOR CLUSTER FROM THE LAUNCHING-HANDLING RAIL

WARNING: Before continuing with deactivation procedures check that the preliminary procedures in paragraphs 11-1 through 11-7 have been performed.

WARNING: The rocket motor cluster contains explosives. All applicable safety regulations will be strictly enforced. Operations involving the handling of explosive items will be performed only in the areas specifically designated. These areas will meet quantity-distance requirements based upon the type and quantity of explosives involved. Where adjacent missiles are a hazard, a barrier will be provided for protection. Do not perform handling operations during electrical storms.

WARNING: Handling operations of the rocket motor cluster will be supervised by qualified explosives personnel who thoroughly understand the hazards and risks involved. A minimum number of personnel will be permitted on or near the work location, and the quantities of explosive materials will be kept to a minimum. Spilled explosive materials will be immediately removed, and the area thoroughly decontaminated before work continues.

WARNING: Explosive components containing electrical wiring must be protected at all times from stray voltages or induced electrical currents. A ground strap with a maximum ground resistance of 20 ohms must be attached from the component to a grounding stake. A CO_2 fire extinguisher will be provided. Extreme care will be exercised when handling explosive components whose size or weight make handling difficult.

11-12. Removal of the Rocket Motor Cluster

CAUTION: Make certain a hoisting device capable of lifting 6,000 pounds is used to remove the rocket motor cluster from the launching-handling rail.

a. Remove the hexagon-head bolts (2, fig. 9-23) and flat washers (1) that secure each lower fin assembly to the rocket motor cluster; remove the fin assemblies.

b. Loosen the hexagon nuts (fig. 10-10) on the snubber channel sufficiently to permit the removal of the rocket motor igniter cable assembly; remove the cable assembly from the snubber channel and clips.

c. Coil the rocket motor igniter cable assembly, and tape to place the coil on top of the thrust structure, and tie or tape it in place.

d. Prepare to lift the rocket motor cluster (par. 9-2*b* through *h*).

e. Remove the two rear and forward retaining rail bars (par. 9-2*i* and *j*).

f. Lift the rocket motor cluster clear of the launching-handling rail.

Note. If trailer M529 has been used, prepare the rocket motor cluster for shipment or storage.

11-13. Transporting the Rocket Motor Cluster to the Service Area

Note. If guided missile low-bed trailer M529 has been used to transport the missile, omit paragraph 11-13. The rocket motor cluster truck is used to transport the rocket motor cluster over smooth terrain (or paved surface). When the terrain is rough, the rocket motor cluster must be moved on the missile body or rocket motor cluster transport adapter mounted on the transporter trailer.

a. Transporting the Rocket Motor Cluster on the Rocket Motor Cluster Truck

(1) Position the rocket motor cluster (9, fig. 9-3) on the rocket motor cluster truck (22).

(2) Secure the rocket motor cluster to the rocket motor cluster truck as prescribed below:

(a) Install the internal-wrenching or hexagon-head bolts (15) and recessed washers (16) to secure the forward retaining rail bars (21) to the forward slipper assemblies (20).

(b) Install the hexagon-head capscrews (12) and flat washers (11) to secure the rear retaining rail bars (10) to the rear slippers (13).

(c) Tighten the adjusting bolts (18) and locknuts (19) to secure the rocket motor cluster to the four supports (14 and 17) on the rocket motor cluster truck.

(3) Remove the rocket motor cluster hoist beam (par. 9-2 *n* through *r*.

(4) Move the rocket motor cluster truck to the service area.

b. Transporting the Rocket Motor Cluster on the Transporter Adapter Mounted on the Transporter Trailer.

(1) Position the rocket motor cluster (2, fig. 9-4) on the missile body or rocket motor cluster transporter adapter.

(2) Secure the rocket motor cluster to the transporter adapter (par. 9-2 *m*).

(3) Remove the rocket motor cluster hoist beam (par 9-2 *n* through *r*).

(4) Move the transporter adapter mounted on the transporter trailer to the service area.

Section VI. REMOVAL OF THE FORWARD BODY SECTION

***Warning:* Before continuing with deactivation procedures, check that the preliminary procedures in paragraphs 11-4 through 11-7 have been performed.**

11-14. Preparation for Removal of the Forward Body Section

a. Remove the flathead screws (6, fig. 3-26 or 2, fig. 3-27) that secure the J1 + XMTR ACCESS DOOR to the right side of the forward body section; remove the access door.

b. Attach the forward body section hoist (1, fig. 7-14) to the top of the forward body section (4) as prescribed below.

(1) Remove the hexagon-head bolts and flat washers stowed in the forward body section hoist.

(2) Remove the flathead screws in the forward body section, and stow in the holes in the forward body section hoist.

(3) Secure the forward body section hoist to the forward body section with the hexagon-head bolts (3) and flat washers (2).

c. Reach through the right access opening, and remove the shoulder bolt (2, fig. 7-13 or 8, fig. 7-9) that secures transponder control group wiring harness connector P1 (3, fig. 7-13 or 9, fig. 7-9) to the transponder control group connector J1 (6, fig. 7-13 or 6, fig. 7-9); disconnect connector P1 form connector J1. Disconnect connector P513 (7, fig. 7-13) from connector J513 (8) (missiles 10206 through 11935).

d. Install the protective cover assembly (4, fig. 7-13 or 17, fig. 3-31) on the transponder control group connector.

Note. Perform *e* below for missiles 10206 through 11935.

e. Remove the truss-head screw (9, fig. 7-13) and flat washer (10) that secure the transponder control group wiring harness clamp (11) to the bracket (12).

Note. Perform *f* below for missiles 13001 and subsequent.

f. Remove the flathead screw (1, fig. 7-9) that secures the support bracket to the missile skin.

g. Attach the falling hook from a hoisting device capable of lifting 2,000 pounds to the forward body section hoist; take up the slack in the hoisting device cable.

h. Remove the flathead screws (10, fig. 7-8), and remove the six boltwell covers (11) from the boltwells (5).

11-15. Removal of the Forward Body Section

a. Remove the hexagon-head bolts (3, fig. 7-8) flat washers (4) that secure the forward body section (6) to the warhead body section (7).

CAUTION: When separating the forward body section from the warhead body section, be sure that the transponder control group wiring harness (8) does not become entangled in the forward body section.

b. Separate the forward body section from the warhead body section.

c. Remove the transponder control group wiring harness from the forward body section.

d. Remove the truss-head screw (9, fig. 7-13 or 4, fig. 7-9), flat washer (10, fig. 7-13 or 3, fig. 7-9), support bracket (12, fig. 7-13 or 2, fig. 7-9), and clamp (11, fig. 7-13 or 5, fig. 7-9).

e. Place the forward body section on the forward body section truck.

f. Secure the rear of the forward body section to the truck with the hand clamp.

g. Secure the front of the forward body section to the truck with the holddown strap.

h. Remove the falling hook.

Note. Perform step *i* below for missiles 13001 and subsequent.

i. Remove the rear housing cover (par. 4-15 *b*) and remove the missile-code delay line (5, fig. 12-3). Replace the cover (par. 4-11 *ae*).

j. Remove the receiving antenna horns (25, fig. 12-2) from forward fin assemblies 2 and 4. Install the dust covers.

Note. Perform step *k* below for missile 10206 thru 11935.

k. Remove the missile-code delay line (par. 12-29 *a* (2) through (4) and 12-29 *b* (3), and replace the J1 + XMTR access door.

Note. Perform *l* and *m* below for missiles 13001 and subsequent.

l. Loosen the two storage loop clamps on the lower edge of the forward body section, and remove the cable section of the hose and cable assembly.

m. Route the cable section along the top of the forward body section, and secure with three flathead screws, flat washers, loop clamps, and hexagon nuts.

n. Place the transponder control group wiring harness in the warhead body section.

Section VII. REMOVAL OF THE FORWARD MAIN FINS AND PREPARATION FOR REMOVAL OF THE WARHEAD BODY SECTION

***Warning:* Before continuing with deactivation procedures, check that the preliminary procedures in paragraphs 11-4 through 11-7 have been performed.**

11-16. Removal of the Forward Main Fins

a. Remove a forward main fin as prescribed below.

(1) Remove the hexagon nut (8, fig. 7-7) and flat washer (7) from the hexagon-head bolts (6).

(2) Slide the forward main fin toward the front of the missile until the aligning pin (4) is clear of the rear main fin (5).

(3) Remove the forward main fin from the warhead body section (1).

(4) Remove the hexagon-head bolt from the forward main fin.

b. Repeat *a* above to remove the three remaining forward main fins.

11-17. Removal of the Fail-Safe Wiring Harness

a. Remove the fail-safe wiring harness as prescribed below:

(1) Remove the roundhead screws (5 and 15, fig. 7-5), flat washers (11), and hexagon nuts (10); remove the clamps (6, and 13) that secure the fail-safe wiring harness (14) to the lower surface of the warhead body section.

(2) Remove the roundhead screws (11 and 20, fig. 7-6), flat washers (14 and 17), and hexagon nuts (15 and 16); remove the

clamps (12 and 18) that secure the fail-safe wiring harness (6) to the upper surface of the warhead body section.

(3) Disconnect fail-safe wiring harness connector P511 (7) from connector J1 (8) or J2 (9) on the sequential timer (10).

(4) Disconnect fail-safe wiring harness connector P540 (1, fig. 7-5) from the connector on the safety-and-arming device mounting plate (2).

(5) Remove the safety wire (1, fig. 7-6) from the latch (2), and disconnect fail-safe wiring harness connector P502 (3) from connector J1 (5) on the fail-safe control (6, fig. 7-4).

(6) Disconnect connector P503 (16, fig. 7-5) of the transponder control group wiring harness from connector J503 (7) on the bottom of the warhead body section.

(7) Remove the roundhead screws (3), flat washers (8), and hexagon nuts (9); remove connector J503 from the bracket (4) at the bottom of the warhead body section.

(8) Remove the fail-safe wiring harness from the warhead body section.

Note. Perform step (9) below for missiles 10206 through 11935.

(9) Secure the fail-safe wiring harness (11, fig. 3-26) in the storage strap (12) on the GUIDANCE TEST AND ADJUST ACCESS DOOR assembly (1).

Note. Perform step (10) below for missiles 13001 and subsequent.

(10) Secure the fail-safe wiring harness (8, fig. 3-27) in the storage clamps (4) in the forward body section.

b. Release the captive screws (7, fig. 7-4) that secure the fail-safe control to the top of the warhead body section; remove the fail safe control.

Note. Perform *c* below for missiles 10206 through 11935 or ***d*** below for missiles 13001 and subsequent.

c. Position the fail-safe control (6) on the fail-safe control bracket (1) in the forward body section, and secure with the captive screws.

d. Position the fail-safe control (8, fig. 7-3) on the fail-safe and timer bracket (2), and secure with the captive screws (1).

e. Remove the flathead screws (4, fig. 7-4) that secure the sequential timer (5) to the warhead body section (3); remove the sequential timer.

Note. Perform *f* below for missiles 10206 through 11935 or *g* and *h* below for missiles 13001 and subsequent.

f. Store the sequential timer in the missile shipping container accessory carton.

g. Position the sequential timer (7, fig. 7-3) on the fail-safe and timer bracket (2); secure with the flat washers (4) and hexagon-head bolts (3).

h. Position the fail-safe and timer bracket on top of the forward body section (9); secure to the forward body section with four flat washers (6) and roundhead screws (5).

11-18. Removal of the Transponder Control Group Wiring Harness

a. Remove the roundhead screws (18 and 26, fig. 7-2), flat washers (16 and 21), and hexagon nuts (15 and 20); remove the clamps (14 and 27) that secure the transponder control group wiring harness (6) to the warhead body section (1).

b. Replace the clamp (14) on the bracket (17), and secure with the roundhead screw (18), flat washer (16), and hexagon nut (15).

c. Remove the flathead screws (19), flat washers (12), and hexagon nuts (11) that secure the bracket (13) to the cover (2).

d. Remove the flathead screws (3) that secure the cover to the warhead body section.

e. Push the bracket and the connectors through the opening in the warhead body section, and remove the wiring harness. Remove the twine securing the wiring harness to the warhead body section.

Note. Perform step *f* for missiles 10206 through 11935.

f. Remove the clamp (7, fig. 7-2), and the attaching hardware.

g. Place the clamps (27) and (7 and 27, fig. 7-2) in a bag, and tie the bag to the transponder control group cable.

h. Insert the wiring harness (13, fig. 3-29) through an opening in the handling ring segment, and tape to the top of the fin.

11-19. Removal of the Warhead Wiring Harness

a. Remove the flathead screws (14, fig. 7-1), flat washers (12 and 13), and hexagon nuts (14) that secure the bracket (10) to the cover (15) and to the warhead body section (1).

b. Remove the flathead screws (16) that secure the cover to the warhead body section.

c. Push the bracket and connectors through the opening in the warhead body section, and remove the warhead wiring harness (4). Remove the twine securing the wiring harness to the warhead body section.

Note: Perform steps *c.1* and *c.2* for missiles 10206 through 11935.

c.1. Remove the clamp (6, fig. 7-1) and the attaching hardware.

c.2. Place the clamp (6) in a bag and tie the bag to the warhead wiring harness.

d. Insert the wiring harness through an opening in the handling ring segment (4, fig. 3-29), and tape to the top of the fin.

Section VIII. REMOVAL OF THE WARHEAD BODY SECTION

Warning: **Before continuing with deactivation procedures, check that the preliminary procedures in paragraphs 11-4 through 11-7 have been performed.**

Warning: **The warhead body section contains explosives. All applicable safety regulations will be strictly enforced. Operations involving the handling of explosive items will be performed only in the areas specifically designated. These areas will meet quantity-distance requirements based upon the type and quantity of explosives involved. Where adjacent missiles are a hazard, a barrier will be provided for protection. Do not perform handling operations during electrical storms.**

Warning: **Handling operations of the warhead body section will be supervised by qualified explosives personnel who thoroughly understand the hazards and risks involved. A minimum number of personnel will be permitted on or near the work location, and the quantities of explosive materials will be kept to a minimum. Spilled explosive materials will be immediately removed, and the area thoroughly decontaminated before work continues.**

Warning: **Explosive components containing electrical wiring must be protected at all times from stray voltages or induced electrical currents. A ground strap with a maximum ground resistance of 20 ohms must be attached from the component to a grounding stake. A CO_2 fire extinguisher will be provided. Extreme care will be exercised when handling explosive components whose size or weight makes handling difficult.**

11-20. Removal of the Boltwell Covers

Note. Perform *a* and *b* below for warhead body sections equipped with a three-section boltwell cover, or *c* below for warhead body sections equipped with a one-piece boltwell cover.

a. Remove the four flathead screws (5, fig. 6-4) that secure the assembled boltwell covers (4) to the warhead body section (7). Remove the boltwell covers.

b. Remove two flathead screws (9, fig. 6-4) and boltwell cover nuts (10) that secure the three boltwell covers together (8 and 12).

c. Remove the flathead screw (9) and the boltwell cover nut (10) that secure the boltwell cover (12); remove the boltwell cover.

11-21. Removal of the Warhead Body Section

a. Remove the two plugs (3, fig. 6-1) from the warhead body section hoist beam attach holes.

Warning: **Check that the threads of the captive bolts (2) in the warhead body section hoist beam (1) and the attach holes in the warhead body section (10) are in good condition.**

b. Install the captive bolts in the hoist beam attach holes, and attach the warhead body section hoist beam to the warhead body section.

Warning: **The two captive bolts on the warhead body section hoist beam must be completely engaged before installing the two safety straps (7, fig. 6-2) to insure proper installation of the safety straps.**

Caution: **Position the safety strap buckles (8) near the hoist beam so that the buckles do not touch the warhead body section (6).**

c. Position the two safety straps of the warhead body section hoist beam around the warhead body section (6), and insert the end of each strap through its respective buckle (8); pull the two safety straps tight.

d. Attach the falling hook (4) of a hoisting device capable of lifting 5,000 pounds to the rear lift point (3) of the hoist beam (5), and take up the hoist chain slack.

e. Remove the hexagon-head bolts (15, fig. 6-4) and flat washers (14) that secure the warhead body section to the rear body section, and move the warhead body section clear of the rear body section.

11-22. Preparation for Shipment or Storage

a. Remove the warhead body section container cover (par. 3-6).

b. Remove the hexagon-head screws (8, fig. 6-1) and the lockwashers (7) that secure the moveable tracks (6) to the stationary tracks.

c. Slide the moveable tracks forward as far as possible.

d. Loosen the captive bolts (5) that secure the moveable track clamps (4) to the moveable track cradle (9) at the forward end of the moveable tracks (6).

e. Loosen the captive bolts (16) that secure the thrust mount bracket (17) to the rear end of the moveable tracks.

f. Remove the hexagon-head screws (1, fig. 6-2), flat washers (2), and hexagon nuts (9) from the thrust mount bracket (10).

g. Coil the boltwell covers, and place them with the attaching hardware into the accessory carton (3, fig. 6-3). Loosen the wing nuts (1); slide back the holddown bar (2); and place the accessory carton in the warhead body section container (4).

h. Slide the holddown bar (2) to the locked position, and tighten the wing nut (1) to secure accessory carton (3).

i. Position the thrust mount bracket to the warhead body section, and secure with the hexagon-head screws (1, fig. 6-2), flat washers (2), and hexagon nuts (9).

j. Initially, in sequential order to diametrically opposite screws, apply 90 pound-inches torque.

k. Finally, in the same order as above, apply 100-pound-inches torque.

CAUTION: Guide the warhead body section to prevent contact with obstructions on the moveable tracks.

l. Slowly lower the warhead body section into the moveable tracks.

m. Secure the thrust mount bracket to the moveable tracks with the captive bolts.

n. Remove the falling hook from the warhead body section hoist beam.

o. Remove the warhead body section hoist beam.

p. Install the two plugs (3, fig. 6-1) in the hoist beam attach holes.

q. Install the moveable track clamp (4) to the moveable track cradle (9), and secure with the captive bolts (5).

r. Slide the moveable tracks and attached warhead body section into the warhead section container. Secure to the stationary tracks with the hexagon-head screws or bolts (8) and lockwashers (7). Secure the screws to the moveable tracks with safety wire (11).

s. Install the container cover (fig. 3-5), and secure with the quick-release clamps. Return the extension handle to the log tube, and secure the log tube cover plate with the wing nuts. Seal the container and log tube cover with lead seals.

t. Process the container for shipment or storage.

Section IX. REMOVAL OF THE MISSILE ROCKET MOTOR SUBASSEMBLY

WARNING: Before continuing with deactivation procedures, check that the preliminary procedures in paragraphs 11-4 through 11-7 have been performed.

WARNING: The missile rocket motor subassembly contains explosives. Operations involving handling of explosive items will be performed only in the areas specifically designated. These areas will meet quantity-distance requirements based upon the type and quantity of explosives involved. Where adjacent missiles are a hazard, a barrier will be provided for protection. Do not perform handling operations during electrical storms.

WARNING: Handling operations of the missile rocket motor subassembly will be supervised by qualified explosives personnel who thoroughly understand the hazards and risks involved. A minimum number of personnel will be permitted on or near the work location, and the quantities of explosive materials will be kept to a minimum. Spilled explosive materials will be immediately recoved and the area thoroughly decontaminatd before work continues.

WARNING: Explosive components containing electrical wiring must be protected at all times from stray voltages or induced electrical currents. A ground strap with a maximum ground resistance of 20 ohms must be attached from the component to a grounding stake. A CO_2 fire extinguisher will be provided. Extreme care will be exercised when handling explosive componnts whose size or weight make handling difficult.

CAUTION: The propellant grain and the metal parts of the missile rocket motor subassembly can be damaged unduly by rough handling or dropping. A rocket motor which has been subjected to such damage or to extreme temperature could cause a malfunction when the missile is fired. Rocket motors so exposed will not be used until a complete inspection of the grain for serviceability has been made.

11-23. Preparation for Removal of the Missile Rocket Motor Subassembly

a. Remove the two motor section access doors (par. 3-8).

b. Loosen the screw (3, fig. 5-14) that secures the container cover to the missile rocket motor initiator containers, and remove the cover (1).

c. Remove the top styrofoam packing (4) from the container.

d. Obtain the two initiators and place into the lower styrofoam packing in the container.

e. Install the top styrofoam packing.

f. Place the container cover on the container, and secure with the captive screw.

g. Store the container in the storage area.

h. Install a ground strap from the forward end of the rocket motor to the ground stake.

i. Disconnect missile rocket motor initiator wiring harness connector P177A (fig. 5-13) from safety-and-arming switch S31 connector J177, and connector P170 from connector J170.

j. Remove the hexagon nut (3, fig. 5-2), truss-head screw (10), and clamp (5) from the bracket (4), and remove the initiator wiring harness (2) from the rear body section.

k. Disconnect connector P171 (3, fig. 5-12) from connector J171 (2).

l. Remove the hexagon-head bolts (5) and nonmetallic washers (6) that secure the motor head heater (4) to the forward end of the missile rocket motor subassembly (1); remove the motor head heater. Remove the insulator (7).

CAUTION: A thermostat wiring harness is attached to each of the two motor heater thermostat access cover plates. Carefully remove these cover plates to prevent damage to the thermostat wiring harness and terminals.

m. Remove the two motor heater thermostat access cover plates (3, fig. 5-1) as prescribed below.

(1) Remove the flathead screws (2) from the cover plate.

(2) Carefully remove the cover plate and allow it to hang from the wiring harness (4).

(3) Repeat steps (1) and (2) above, and remove the cover plate from the opposite side of the rear body section.

n. Reach through the motor section access opening, and loosen the nut (5, fig. 5-11) on the captive bolt (6) on the V-band coupling.

Note. Do not remove the V-band coupling from the missile rocket motor subassembly.

11-24. Removal of the Missile Rocket Motor Subassembly

CAUTION: Use the lifting cleats (4, fig. 5-6) located at the four corners of the box cover (1) only for lifting the container cover from the container base (29). Lift the complete container with an approved lifting device.

a. Remove the container cover from the missile rocket motor subassembly container (para. 5-7*a* through *e*).

b. Remove the hexagon nuts (8) and the lockwashers (9) that secure each of the two support clamps (7) to the shipping supports (13).

c. Remove the two shipping rings (11) and hexagon-head bolts (15) from the box.

WARNING: Check that the threads of the captive bolts (fig. 5-10) in the missile rocket motor hoist beam and the bolt holes in the missile rocket motor subassembly are in good condition.

CAUTION: Handle the beam with the falling hook engaged at the HOIST POINT BEAM ONLY lifting point (4, fig. 5-9) when performing *d* below.

d. Attach the falling hook (3) of a hoisting device capable of lifting 5,000 pounds to the HOIST POINT BEAM ONLY lifting point on the missile rocket motor hoist beam (5).

Note. Guide pins on the "C" beam may be removed.

e. Position the missile rocket motor hoist beam (fig. 5-10) near the missile rocket motor subassembly; aline the captive bolts

in the hoist beam with the bolt holes in the missile rocket motor subassembly; tighten the captive bolts.

f. Transfer the falling hook of the hoisting device to the HOIST POINT CAPACITY 3,000 lbs. lifting point (2, fig. 5–9) on the missile rocket motor hoist beam.

g. Take the slack out of the hoisting cable, and apply a slight tension.

h. Reach through the motor section access openings, and remove the hexagon-head bolts (2, fig. 5–11), nonmetallic washers (15), and flat washers (1) that secure the missile rocket motor subassembly (13) to the motor mounting ring (3) in the rear of the missile body section.

i. Slowly move the missile body truck (fig. 5–10) away until the motor subassembly is clear of the rear body section.

11–25. Crating the Missile Rocket Motor Subassembly

a. Position the missile rocket motor subassembly (8, fig. 5–9) over the shipping supports (13, fig. 5–6) of the container.

b. Install the rear shipping ring (9, fig. 5–9) on the rear end of the rocket motor subassembly and secure with the hexagon-head bolts (1).

c. Secure the split ring (if present) to the front end of the missile rocket subassembly.

Note: Omit c and c.1 below if a 1-piece shipping ring is used.

c. Secure the 2-piece shipping rings to the front end of the missile rocket subassembly.

c.1. Lower the motor subassembly, guiding the shipping rings into the shipping supports.

Caution: **Insure that the half-rings (14, fig. 5–6) are loose.**

d. Lower the motor subassembly, guiding the rear shipping ring into the rear shipping support. Using an adequate lifting device, support the forward end of the missile rocket motor.

e. Transfer the falling hook (3, fig. 5–9) to the HOIST POINT BEAM ONLY lifting point (4) on the missile rocket motor hoist beam (5).

f. Loosen the captive bolts (7) on the hoist beam, and remove the hoist beam from the motor subassembly.

Note: If 2-piece shipping rings are installed, omit g and h.

g. Install the forward shipping ring (4, fig. 5–8) on the forward end of the missile rocket motor subassembly (6), and secure with the hexagon-head bolts (8).

h. Lower the missile rocket motor subassembly (13) until the forward shipping ring (4) seats in the forward shipping support (12).

i. Tighten the bolts (15, fig. 5–6) that secure the two half rings (14) to the shipping supports (13).

j. Install the two support clamps (7) on the shipping supports (13), and secure with the lockwashers (9) and hexagon nuts (8).

k. Install the missile rocket motor initiator container (17) on the box base (12), and secure with the truss-head screws (6).

k.1. Remove the gasket from the rocket motor adapter.

l. Install the shipping cover (20) in the V-band coupling (19) on the motor adapter (18), and secure with the nut (21) on the captive bolt (22) on the V-band coupling.

l.1. Place the gasket in an envelope and fasten it to the container base under the rear of the rocket motor.

m. Remove the ground strap.

n. Install the box cover (1) on the box base (29), and secure with the attaching hardware.

o. Remove the container to the proper area for storage.

11–26. Final Preparation of the Rear Body Section for Storage or Shipment

a. Reach through either motor section access opening, and install the V-band coupling (9, fig. 5–3) on the forward end of the blast tube (8).

b. Work the blast tube shipping support (1) through either motor section access opening by inserting one leg of the support through the opening then turning the support until another leg is through the opening. Turn the support until all legs are inside the motor section, with the legs forward.

c. Position the blast tube shipping support so that it is seated in the forward end of the blast tube and the legs are alined with the holes on the missile rocket motor mounting ring (10); secure with the hexagon-head bolts (13), flat washers (12), and hexagon nuts (11).

d. Secure the V-band coupling over the blast tube shipping support and the forward end of the blast tube by tightening the nut (7) on the captive bolt (6) on the V-band coupling (9).

e. Connect rocket motor initiator wiring harness connectors P170 (6, fig. 5–2) and P177A (7) to connector J170 (9) and J177 (8).

f. Secure the rocket motor initiator wiring harness (2) to the shipping straps (1) in the upper portion of the forward motor section, and secure the clamp to forward motor section with the attaching hardware.

g. Install the two motor heater thermostat access cover plates (para 5–10*a*).

h. Install the motor section access doors with the flathead screws. Tighten the screws to the torque value given in table 15–9.

Section X. DEFUELING, DEPRESSURIZING, AND PURGING THE ACCESSORY POWER SUPPLY (APS)

11-27. General

Defueling and depressurizing of the APS is required when the missile is being deactivated under normal conditions. When the missile is to be deactivated and stored, the APS is defueled, depressurized, and the APS fuel system purged with nitrogen.

11–28. Servicing and Test Equipment

The servicing and test equipment necessary to defuel, depressurize, and purge the APS are listed below.

a. An ET_hO fuel tank and fuel tank cart, complete with drain valve, drain hose, fuel transfer hose with a static ground lead attached, and a fuel fill hose with a static lead attached.

b. A nitrogen tank and nitrogen tank cart, with a regulator valve and a nitrogen supply hose.

c. One 2½-gallon (minimum) container, at least half-filled with water to catch drained ET_hO.

d. An adequate supply of water must be available immediately for personnel decontamination or diluting spilled ET_hO.

e. The missile electrical test set group.

11–29. APS Defueling

Warning: **ET_hO liquid and vapor cause severe burns if allowed to become confined between the skin and clothing. Care should be exercised to keep ET_hO from dropping on or into shoes or clothing. Should ET_hO become confined between the skin and clothing, remove the clothing, and immediately wash the skin with soap and water, and allow clothing to air-dry for several hours. Dispose of contaminated shoes. Should ET_hO get into the eyes, flush the eyes with water, and report to the proper authorities.**

Warning: **The maximum allowable concentration of ET_hO vapors is 50 parts of ET_hO per million parts of air for an 8-hour exposure. Where high-vapor concentrations exist, and when working in confined, unventilated areas, an approved type self-contained breathing apparatus must be worn.**

Warning: **Clear the area of all nonparticipating personnel and flammable materials. Position two manned CO_2 fire extinguishers within**

4 feet of the APS, and prohibit smoking within 60 feet. Operating personnel must wear goggles or a face mask, rubber gloves, and a rubber apron.

Warning: **Small quantities of unserviceable $ET_h O$ should be disposed of by burning in accordance with applicable instructions or by diluting with a minimum of 22 parts of water to each part of $ET_h O$ and dumping into a sanitary sewer or fast moving stream of water.**

a. Remove the flathead screws (3 and 10, fig. 3–21), and remove the equipment section access cover plate on the right side of the missile body.

WARNING: Make certain that the drain valve on the fuel tank cart is fully clockwise. (closed).

b. Connect the static ground lead (fig. 11-2), attached to the end of the fuel transfer hose, to the APS service panel wherever a satisfactory ground connection can be made.

c. Depress the TRANSFER valve on the APS service panel, and hold for a minimum of 25 seconds; release the TRANSFER valve.

d. Connect the fuel transfer hose to the FUEL FILL fitting on the APS service panel.

e. Place the end of the fuel drainhose in the 2-1/2-gallon minimum container at least half filled with water.

WARNING: Before performing *f* below, make certain the end of the fuel drain hose is immersed in the water and the hose securely attached to the 2-1/2-gallon (minimum) container. During the performance of *f* below, keep the end of the fuel drain hose immersed until $ET_h O$ bubbles have stopped. Remove the end of the fuel drain hose from the water, but be prepared to immerse the end of the hose immediately in the water if the $ET_h O$ appears.

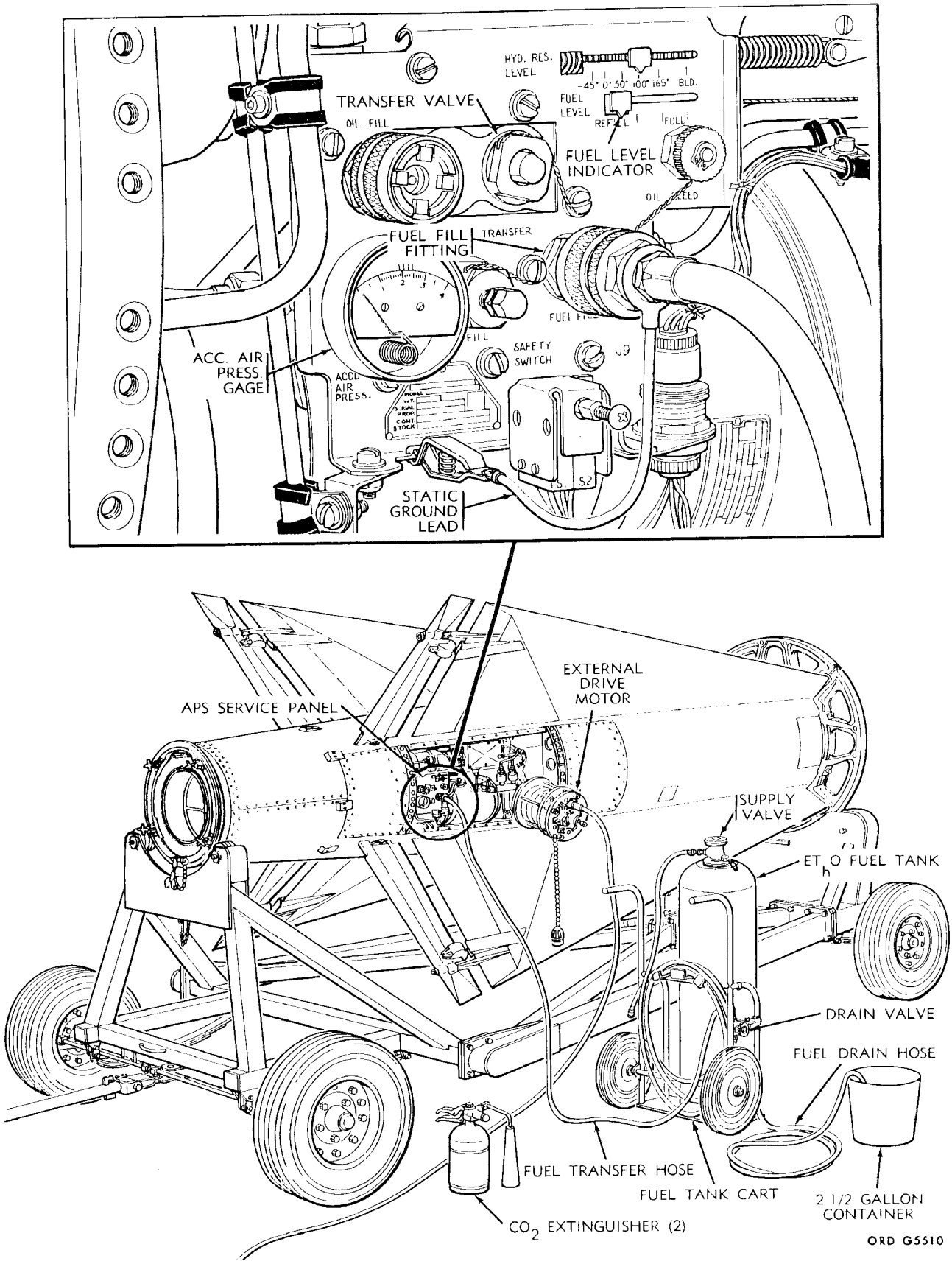

Figure 11-2. APS Defueling.

f. Slowly turn the drain valve on the fuel tank cart counterclockwise, allowing the ET_hO to drain from the APS into the 2-1/2-gallon (minimum) container.

g. Install the external drive motor on the APS (table 4-2).

h. Connect the ground power cable assembly (fig. 4-13) to connectors P104A and P105A on the missile umbilical cable, and to connector J7 on the rear of the missile electrical test set group.

i. Perform the arm safety check (par. 4-6).

Note. The illustrated tables of controls and indicators for the missile electrical test set group are contained in TM 9-4935-253-12.

j. Set the AC POWER switch to ON. The POWER ON indicator light illuminates.

k. Set the HEATERS EXTERNAL switch to ON. The HEATERS EXTERNAL indicator light illuminates.

l. After approximately 30 seconds, operate the AUXILIARY POWER SUPPLY switch to START, and hold for a minimum of 1 second and a maximum of 2 seconds.

m. Set the HEATERS EXTERNAL switch to OFF. The HEATERS EXTERNAL indicator light extinguishes.

n. Set the AC POWER switch to OFF. The POWER ON indicator light extinguishes.

o. Set the external drive motor switch (fig. 4-9) to ON. Allow the external drive motor to accelerate to operating speed as indicated by the change in the pitch of the external drive motor sound. The ACC. AIR PRESS. gage (fig. 11-2) indicates 2,500 to 3,000 psi.

p. Set the external drive motor switch to OFF.

q. Repeat *o* and *p* above until the ET_hO stops flowing.

r. Remove the external drive motor.

s. Depress the TRANSFER valve (fig. 11-2) on the APS service panel, and hold for a minimum of 25 seconds. The ACC. AIR PRESS. gage indicates the ambient temperature; release the TRANSFER valve.

t. Turn the drain valve on the fuel tank cart fully clockwise.

u. Disconnect the fuel transfer hose from the FUEL FILL fitting on the APS service panel. Disconnect the static ground lead from the APS service panel, and place the fuel transfer hose on the fuel tank cart. Disconnect the ground power cable assembly from connectors P104A and P105A.

11-30. APS and HPU Depressurizing

a. Make certain that the air line bleed valve on the air supply hose is open.

Warning: **Weight the air supply hose with sand bags, and secure it to the missile body truck. Assure that the air fill valve on the end of the air supply hose is fully closed.**

b. Remove the AIR FILL fitting cap (fig. 4-7 or fig. 4-18) from the AIR FILL fitting on the APS service panel. Connect the air supply hose from the air supply to the AIR FILL fitting.

c. Open the air fill valve on the end of the air supply hose.

d. Slowly turn the AIR FILL fitting locknut counterclockwise. The ACC. AIR PRESS. gage indication decreases to 0.

e. Turn the AIR FILL fitting locknut fully clockwise.

f. Disconnect the air supply hose, and install the AIR FILL fitting cap on the AIR FILL fitting.

11-31. APS Purging

Warning: **Make certain that the procedures in paragraphs 11-29 and 11-30 have been performed before performing *a* through *i* below.**

Note. When the missile is to be deactivated and stored, the APS fuel system will be purged, using nitrogen only.

a. Connect the fuel transfer hose (fig. 11-3) from the fuel cart to the FUEL FILL fitting on the APS service panel. Place the end of the fuel drain hose in the 2-1/2-gallon (minimum) container at least half filled with water.

b. Open the drain valve on the fuel tank cart.

Warning: **Do not perform *c* below until the ET_hO ceases to flow from the fuel drain hose.**

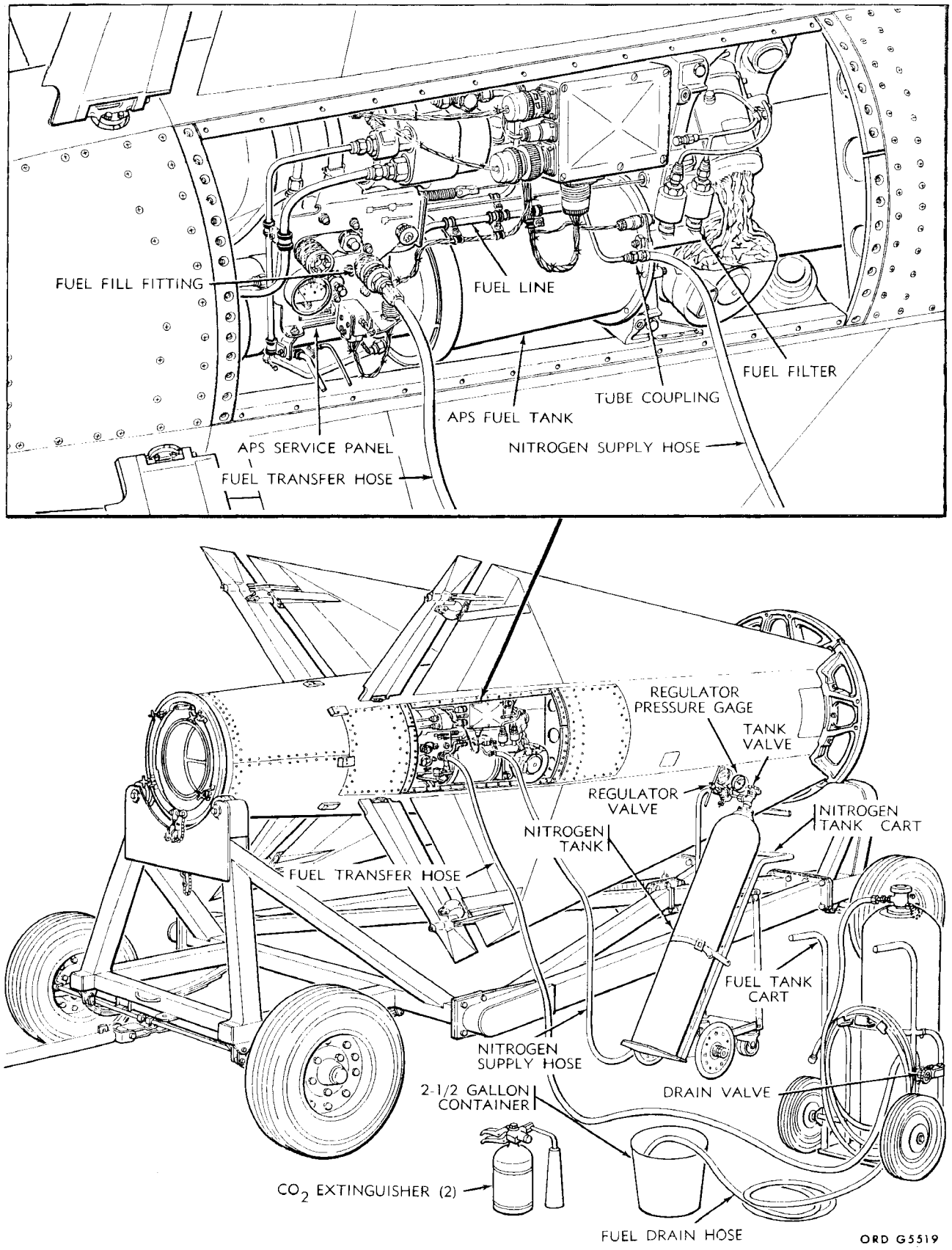

Figure 11-3. APS purging.

c. Disconnect the fuel line from the fuel filter on the APS fuel tank, and connect to nitrogen supply hose on the nitrogen tank. Tighten the tube coupling on the end of the fuel line.

WARNING: Before performing *d* through *g* below, make certain the end of the fuel drain hose is immersed in the water and the hose is securely attached to the 2-1/2-gallon (minimum) container. During the performance of *d* through *g* below, keep the end of the fuel drain hose immersed until the $ET_h O$ bubbles have stopped. Remove the end of the fuel drain hose from the water, but be prepared to immerse the end of the hose immediately in the water if $ET_h O$ appears.

d. Turn the tank valve on the nitrogen tank fully counterclockwise.

e. Turn the regulator valve on the nitrogen tank clockwise until the regulator pressure gage indicates 15 psi.

f. After a minimum of 5 minutes, turn the regulator valve on the nitrogen tank fully counterclockwise. The regulator pressure gage indication decreases to 0.

g. Turn the tank valve on the nitrogen tank fully clockwise.

h. Disconnect the nitrogen supply hose from the fuel line on the APS fuel tank, and place the hose on the nitrogen tank cart. Connect the fuel line to the fuel filter on the APS fuel tank, and torque the tube coupling on the end of the fuel line to 50 pound-inches.

i. Disconnect the fuel transfer hose from the FUEL FILL fitting on the APS service panel.

Section XI. REMOVING AND PACKAGING THE MAIN FINS AND THE ELEVONS

11-32. Removal of the Elevons

a. Remove the double-hexagon nut (8, fig. 3-25) and flat washer (7) from the elevon hinge clevis (4).

b. Remove the spring pin (11).

c. Remove the elevon attach pin (13).

d. Rotate the elevon until free of the universal joint (12).

e. Pull the elevon (9) from the elevon hinge clevis.

f. Repeat *(d)* through *(e)* above to remove the remaining three elevons.

11-33. Removal of the Rear Main Fin

a. Remove the flathead screws (3, 7, 9, and 10 fig. 3-21); remove the equipment section access cover plates (2 and 8).

b. Remove the double-hexagon nut (9, fig. 3-24) and flat washer (8) from the rear main fin attach stud (6) at the forward end of the rear main fin (12).

c. Remove the fin retaining hanger-point setscrews (1) from the spar socket (2).

CAUTION: While performing *d* below, use extreme care to guide the indexing pins (14) and the rear main fin spar (10) out of their respective mounting holes.

d. Carefully remove the rear main fin from the rear body section (13).

e. Remove the retainer screw (4) and stud retainer (5).

f. Remove the rear main fin attach stud (6).

g. Repeat *b* through *f* above to remove the remaining rear main fins.

h. Install the two equipment section access cover plates (2 and 8 fig. 3-21) and secure each cover plate with the flathead screws. Tighten the screws to the torque value given in table 15-9.

11-34. Packaging the Main Fins and Elevons

a. Position the four rear main fins (fig. 3-19) in the main fin and elevon shipping and storage box.

b. Position the forward main fin support in the box, and secure with the square-neck bolts, flat washers, lockwashers, and square nuts.

c. Position the rear main fin support block in the box, and secure with the square-neck, bolts, flat washers, lock-washers, and square nuts.

d. Position the four forward main fins (fig. 3-18) and the four elevons in the box.

e. Position the forward main fin support block, and secure with the flat washers, lockwashers, and square nuts.

f. Position the elevon support block in the box.

g. Inventory and repackage the hardware, and place the hardware in the shipping and storage box.

h. Close the box cover, and position the hasp on each of the three cover fasteners.

i. Position the straps, and secure to the cover with nails.

j. Turn the swivel on each of the three cover fasteners, and seal with lead seals.

k. Process the box for shipment or storage.

Section XII. PREPARATION OF THE FORWARD AND REAR BODY SECTIONS FOR SHIPMENT OR STORAGE

11-35. Preparation of the Shipping Container

a. Remove the rear body section and forward body section container cover (par. 3-6).

b. Remove all the loose shipping hardware stowed in the container.

c. Remove the hexagon-head screws (20, fig. 3-7) and lockwashers (21) that secure the moveable tracks (22) to the stationary tracks (1).

d. Slide the moveable tracks forward as far as possible.

e. Loosen the four forward shipping clamp captive bolts (fig. 3-9), and remove the forward shipping clamp.

f. Loosen the captive bolts (fig. 3-10), and remove the rear shipping clamps.

g. Remove the hexagon-head screws (8, fig. 3-7, flat washers (7), and hexagon nuts (5) that secure the forward body section shipping support channel (11) to the support arms (6). Remove the shipping support channel.

h. Remove the hexagon-head screws (4), lockwashers (3), and flat washers (2) that secure the support arms to the moveable tracks; remove the support arms.

i. Inventory and repackage the hardware in the accessory carton. Secure the accessory carton in the forward and rear body section container.

11-36. Preparation of the Rear Body Section for Shipment

a. Position the tunnel section brackets (8, fig. 3-14) on the rear body section (11) in the 1 and 2 fin positions, and secure each bracket with the two roundhead screws (10) and flat washers (9).

b. Position the shipping tunnel sections (3 and 7) over the tunnel section brackets, and secure each with the flat washers (1) and roundhead screws (2), and the flat washers (4) and the hexagon-head bolts (5).

CAUTION: To prevent damage to the cable insulation, hold the branches of the wiring harnesses spread apart and not touching the bolt until the bolt has been tightened.

c. On missiles 11839 through 11935, spread the branches of each lower wiring harness, and install the hexagon-head bolt (5) and flat washers (4) into each lower main fin mounting bolt hole. Using the tape (6), tape the wiring harness to the hexagon-head bolt.

d. Position the shipping adapter (fig. 3-15) on the forward end of the rear body section, and secure with the hexagon-head bolts, lock washers, and flat washers.

e. Remove the plugs (1, and 5, fig. 3-11) on the top of the rear body section.

f. Position the safety strap buckles near the hoist beam so that the buckles do not touch the missile skin.

g. Position the rear body section hoist beam (4) on top of the rear body section; secure with the captive bolts (3) and the safety strap assemblies (2).

h. Position a hoisting device capable of lifting 6,000 pounds, and attach the hoist beam to the hoisting device.

i. Release the lock pin (fig. 9-1) from the rear roll ring and the self-locking pins from the handling ring segment.

j. Lift the rear body section (3, fig. 3-13) clear of the missile body truck.

k. Loosen the captive bolts that secure the side handling ring segments; remove the segments.

l. Loosen the captive bolts (fig. 3-12) that secure the rear roll ring to the rear body section; remove the rear roll ring and store on the missile body truck.

m. Position the rear body section over the moveable tracks (9, fig. 3-11). Do not release the tension from the hoisting device, but hold the rear body section slightly above the moveable tracks.

n. Manipulate the rear body section into the container until properly positioned over the moveable tracks.

o. Release the tension from the hoisting device.

p. Slide the two rear body support mounts (fig. 3-9) into place between the rear body section and moveable tracks; secure to the rear body section with the captive bolts and to the moveable tracks with the captive bolts.

q. Loosen the captive bolts (6, fig. 3-11) that secure the upper and lower handling-ring segments (7). Remove the segments.

r. Coat the plugs (8) with soft-film corrosion preventive compound and install them in the upper and lower segment mounting bolt holes.

s. Loosen the captive bolts (3), and release the safety strap assemblies (2) that secure the hoist beam to the rear body section; remove the hoist beam.

t. Coat the plugs (1 and 5) with soft-film corrosion preventive compound and install them in the hoist beam attach points.

u. Position the forward shipping clamp (fig. 3-9), and secure with the forward shipping clamp captive bolts.

v. Position the rear shipping clamp (fig. 3-10), and secure with the captive bolts.

w. Slide the moveable tracks (fig. 3-9) with the rear body section attached partway into the container.

11-37. Preparation of the Forward Body Section for Shipment

a. Install the shipping support channel (11, fig. 3-7) on the forward body section, and secure with the hexagon-head screws (15), flat washers (14), and hexagon nuts (13).

b. Position the two support arms (6) on the moveable tracks (22) with the hexagon-head screws (4), lockwashers (3), and flat washers (2).

c. Allow the ends of the transponder control group wiring harness (18) and the warhead wiring harness (17) to rest on the floor.

d. Attach the hoisting unit capable of lifting 3,500 pounds to the hoist (9).

e. Release the hand clamp (8, fig. 3-8) and the holddown strap (1) on the forward body section truck (10).

f. Lift the forward body section (12, fig. 3-7) from the forward body section truck, and carefully slide the forward body section into the rear body section (19).

g. Secure the shipping support arms (6) with the hexagon-head screws (8), flat washers (7), and hexagon nuts (5).

h. Remove the falling hook from the forward body section hoist.

i. Wrap the transponder control group wiring harness and the warhead wiring harness around the forward body section, and secure them with shipping cord.

j. Slide the moveable tracks fully into the containers, and secure with the lockwashers (21) and hexagon-head screws (20). Secure the screws to the moveable tracks with safety wire.

k. Install the two heater brackets (8, fig. 3-6) on the forward body section (1) with the hexagon-head bolts (3), flat washers (2), and hexagon nuts (10).

l. Secure the special shape insulation (4) inside the missile motor head heater (5).

m. Install the motor head heater on the heater brackets with the hexagon-head bolts (6), flat washers (7), and hexagon nuts (9).

n. Install the container cover (fig. 3-5) on the rear body section and forward body section container, and secure the quick release clamps.

o. Place the extension handle and the missile system record book in the log tube, and swing the log tube cover plate closed; secure the log tube cover plate in position with the wing nuts.

p. Seal the container and log tube cover with the lead seals.

q. Process the container for shipment or storage.