Posted Bd

CENTRAL FILE COPY

FM 44-80
C 2
54th MSL B
Read, Initial & Return to S-1
CO
EX
S-1
S-2
S-3
S-4
MSL
COMMO
MTO
CHAP
MED
S-MAJ

FIELD MANUAL

# PROCEDURES AND DRILLS FOR THE NIKE I SYSTEM

FM 44-80
CHANGES No. 2

DEPARTMENT OF THE ARMY
WASHINGTON 25, D. C., *29 January 1957*

FM 44-80, 9 January 1956, is changed as follows:

Change running head at top of page 439 of C 1, 15 November 1956, to read:

**15 NOV 56 C 1, FM 44-80**

Remove pages i and ii and substitute revised pages i and ii.

(AG 453.5 (29 Jan 57))

By Order of *Wilber M. Brucker*, Secretary of the Army:

MAXWELL D. TAYLOR,
*General, United States Army,*
*Chief of Staff.*

Official:

HERBERT M. JONES,
*Major General, United States Army,*
*The Adjutant General.*

Distribution:

*Active Army:*

Tec Svc, DA
Tec Svc Bd
Hq CONARC
Army AA Comd
Army Regional Comd
MDW
Armies
Corps
AAA Brig
First GM Brig
Gen & Br Svc Sch
Ord GM Sch
AA & GM Sch
Units organized under following TOE's:
44-12R, Hq & Hq Btry, AAA Gp, Mbl
44-112C, Hq & Hq Btry, AAA Gp, Continental
44-145R, AAA Msl Bn, NIKE, Smbl
44-146R, Hq & Hq Btry, AAA Msl Bn, NIKE Smbl
44-147R, AAA Msl Btry, NIKE, Smbl
44-445C, AAA Msl Bn, NIKE, Continental
44-446C, Hq & Hq Btry, AAA Msl Bn, NIKE, Continental
44-447C, AAA Msl Btry, NIKE, Continental
44-448C, AAA Msl Btry, Dual-Con, NIKE, Continental

*NG:* State AG; units—same as Active Army.
*USAR:* Same as Active Army.
For explanation of abbreviations used, see SR 320-50-1.



FOR OFFICIAL USE ONLY

U. S. GOVERNMENT PRINTING OFFICE 1957

Bort

FIELD MANUAL

# PROCEDURES AND DRILLS FOR THE NIKE I SYSTEM

FM 44-80
CHANGES No. 1

DEPARTMENT OF THE ARMY
WASHINGTON 25, D. C., *15 November 1956*

FM 44-80, 9 January 1956, is changed as follows:

Stamp the words "FOR OFFICIAL USE ONLY" at the bottom of each page of the manual.

On figure 29, page 42, under item 12 add the word NORMAL below the switch; under item 13 change NORMAL to read DEC and change TEST to read INC.

On figure 50, page 75, change telephone jack in lower right corner from TECH LOOP to read **STA 2**; change telephone jack in lower left corner from COMMAND LOOP to read **STA 1.**

On figure 103, page 130, change legend to read: **Booster igniter circuit tester (8020714).** Change LAUNCHER TEST to read **IGNITER TEST;** change IGNITER TEST to read **LAUNCHER TEST.**

Figures 101, 105, 126 through 134, inclusive, and 140 through 144, inclusive, are rescinded.

Figure 217, page 436, is upside down.

On page 353, in paragraph 318*d*, change the words "blue alert" to read: **red status.**

In paragraph 373, on page 404 under STEP 2, change "ALERT STATUS" to read: **STATUS;** change "alert status" to read: **status;** under STEP 4, change "BLUE ALERT" to read: **BLUE STATUS.**

In paragraph 419*c* on page 444, change reference "(1, fig. 202)" to read: **(1, fig. 208).**

Remove pages 1 through 12 and substitute revised pages 1 through 3, pages 4 and 5, revised page 6, page 7, revised pages 8 through 11, and page 12.

Remove pages 15 and 16 and substitute page 15 and revised page 16.

Remove pages 19 and 20 and substitute page 19 and revised page 20.

Remove pages 33 and 34 and substitute page 33 and revised page 34.

Remove pages 37 and 38 and substitute page 37 and revised page 38.

Remove pages 43 and 44 and substitute page 43 and revised page 44.

Remove pages 47 through 50 and substitute revised page 47, pages 48 and 49, and revised page 50.

Remove pages 61 and 62 and substitute revised page 61 and page 62.

Remove pages 67 through 72 and substitute revised pages 67 through 69, pages 70 and 71, and revised page 72.

Remove pages 77 through 80 and substitute revised page 77, page 78, revised page 79, and page 80.

Remove pages 83 through 88 and substitute page 83, revised page 84, page 85, and revised pages 86 through 88.

Remove pages 95 and 96 and substitute page 95 and revised page 96.

Remove pages 99 through 102 and substitute page 99 and revised pages 100 through 102.

Remove pages 125 through 128 and substitute page 125, revised page 126, page 127, and revised page 128.

Remove pages 131 through 138 and substitute revised pages 131, 132, 137, and 138 (material on pages 133 through 136 is deleted).

Remove pages 139 and 140 and substitute revised pages 139 and 140.

Remove pages 145 through 152 and substitute page 145, revised pages 146 and 147, page 148, revised pages 149 through 151, and page 152.

Remove pages 163 and 164 and substitute revised page 163 and page 164.

Remove pages 167 through 170 and substitute revised pages 167 through 170 and add new page 170.1.

Remove pages 177 through 326 and substitute page 177 and revised pages 178 through 306. (Pages 307 through 326 are not used.)

Remove pages 333 through 352 and substitute revised pages 333 through 350. (Pages 351 and 352 are not used.)

Remove pages 357 through 402 and substitute revised pages 357 through 396. (Pages 397 through 402 are not used.)

Remove pages 439 and 440 and substitute revised pages 439 and 440.

Remove pages 445 through 450 and substitute revised pages 445 and 446, page 447, and revised pages 448 through 450.

Remove pages 473 through 478 and substitute revised pages 473 through 478.

# PROCEDURES AND DRILLS FOR THE NIKE-1 SYSTEM

two plotting boards in the battery control trailer. With this information, knowing the rules of engagement and the restricted areas, the battery control officer determines the most advantageous time to fire the round. After the round has been fired, these two plotting boards plot the course of the target and the missile flight path. These plots provide the battery control officer with a graphic representation of the missile and target flight paths. Controls necessary for premature or delayed detonation of the warheads are incorporated into the system.

*c.* To aid in analyzing the results of each firing, certain major events are automatically recorded by an event recorder located in the battery control trailer. This gives a permanent record of each round fired.

*d.* Testing equipment and facilities are provided to enable battery personnel to properly check, test, and adjust the system components for accurate firing. Some of the test equipment is an integral part of the equipment while others are not. The test equipment provides facilities for checking the rounds, the fire control equipment, the launching and handling equipment, and the missile and the booster during preparation and assembly and prior to firing.

*e.* The Nike I system is designed to operate with four sections per battery and four launchers per section. A smaller number may be used. Present ConUS units use three sections with four launchers in each section.

## 7. Fire Unit

Each missile battery is an integrated antiaircraft fire unit capable of acquiring and tracking aerial targets and firing and controlling Nike I missiles. As show in figure 1, the battery is divided into two major areas, the battery control area and the launching area.

## 8. Battery Control Area

The major items of equipment in this area are the ground guidance and control equipment. They are—

*a. Acquisition Radar.* This radar is composed of the acquisition antenna, receiver, and transmitter. The operator's controls and displays are located in the battery control trailer. It is used to detect, observe, identify, and designate selected targets.

*b. Target-Tracking Radar.* This radar is composed of the tracking antenna, receiver, and transmitter mounted on a drop-bed antenna trailer. The three operator's controls and displays (azimuth, elevation, and range) are located on the target console in the radar control trailer. The target-tracking radar tracks the designated target and furnishes target present position data to the computer.

*c. Missile-Tracking Radar.* This radar is composed of the missile-tracking antenna, receiver, and transmitter, mounted on a drop-bed antenna trailer. The operator's controls and displays are located on the missile console in the radar control trailer. The missile-tracking radar tracks the missile, supplies the computer with missile present position data, and provides a communication link for transmitting orders from the computer to the missile. The missile-tracking radar is similar in appearance to the target-tracking radar.

*d. Battery Control Trailer.* The battery control trailer contains the acquisition radar cabinet assembly, the battery control console assembly, the computer assembly, an early warning plotting board, and an event recorder and switchboard cabinet assembly. The battery control console assembly contains the displays and controls required by the acquisition radar operator, the battery control officer, and the computer operator.

*e. Radar Control Trailer.* The radar control trailer contains the target console assembly, the missile console assembly, the radar power cabinet assembly, and the radar range and receiver cabinet assembly. The missile and target consoles contain the controls and displays required for the missile-tracking and target-tracking radar operators.

*f. Radar Collimation Mast Assembly.* This assembly is composed of the radar rf test set, the radar collimation mast, and the target-head assembly. It is used in collimating, testing, and adjusting the missile-tracking and target-tracking radars.

*g. Electrical Generating Equipment.* This equipment produces the necessary electrical power to operate the equipment in the fire control area. Commercial power with electrical converters (changers) to change 60-cycle power to 400-cycle power will be utilized where available.

*h. Battery Control Area Cable System.* This cable system interconnects the various elements in the battery control area.

*i. Interarea Cable System.* The interarea cable system includes the cables necessary to connect the battery control area with the launching area. When cable installation and easement costs for the interarea cables are excessive, wire and radio voice

control will be utilized. The feasibility of developing a radio link to replace the three interarea cables is being studied by the Department of the Army.

*j. Maintenance and Spares Trailer.* This trailer provides facilities for storing portable test equipment, spare components, and spare parts. Components of the acquisition radar are carried in this trailer during march order.

## 9. Launching Area

This area contains the launching control trailer, launching section equipment, and launcher-loaders.

*a. Launching Control Trailer.* The launching control trailer contains the launching control panel, the launching control switchboard, and the test responder. The launching control panel contains the controls, displays, and communications equipment necessary to supervise and monitor the activities of the launching sections during an engagement and to act as a relay station between the launching sections and the battery control area.

*b. Launching Section Control Cabinet.* This cabinet, located underground in the underground magazine storage type sites (figs. 57 and 58), or in the launching section revetment in aboveground installations, contains the necessary controls, indicators, and communication facilities to enable a launching section to control the preparation and firing of its rounds. It also coordinates the activities of the launching section with the launching control panel operator in the launching control trailer. It consists of a launching section control panel and a launching section power cabinet.

*c. Launcher-Loader Assemblies.* The launcher-loaders provide the equipment necessary to accomplish the physical operations at the launching site for storing, loading, and firing the rounds.

*d. Electrical Generating Equipment.*

(1) Aboveground sites. Electric power for aboveground sites is supplied by 400-cycle 30-KW engine generators, or commercial sources with suitable converters (changers) where available.

(2) Underground sites. Electric power for underground sites is supplied by 150-KW 60-cycle diesel generators or commercial sources when available. Direct 60-cycle power is used for the elevator. Where 400-cycle power is required, the 60-cycle power is converted to 400-cycle power by means of frequency converters (changers).

*e. Launching Area Cable System.* This cable system interconnects the various elements in the launching area.

## 10. TOE

The use of guided missiles in the antiaircraft artillery role is a comparatively new one in the field of warfare. It must therefore be expected that organizational and equipment changes will be made to incorporate the lessons learned from field experiences. Appropriate TOE should be referred to for organization, designation of duties, and number of personnel in any particular section or platoon.

## 11. Nike I Battalion

(fig. 3)

The Nike I battalion consists of a headquarters and headquarters battery, four firing batteries, and a medical section.

## 12. Headquarters and Headquarters Battery

Figure 4 shows the organization of headquarters and headquarters battery. The responsibilities and duties of each section are essentially the same as for AAA gun battalions, except for the assembly and service section. This section has technical personnel to supervise and assist in the assembling, testing, and performing organizational maintenance of missiles and boosters. Each of the firing batteries will maintain an assembly and test area. The battalion assembly and service personnel function as a traveling team. The personnel required in the assembly and test area are supplied by the firing batteries.

## 13. AAA Missile Battery

Figure 5 shows the organization of the AAA missile battery. See FM 44–85 for a description of the dual battery.

*a. Headquarters Section.* The organization and responsibility of the headquarters section is essentially the same as in AAA gun batteries.

*b. Communications Section.* This section is responsible for installing and maintaining the noncommercial communication nets, and operating the commercial communication nets within the battery.

*c. Fire Control Platoon.* The fire control platoon is responsible for the operation and maintenance

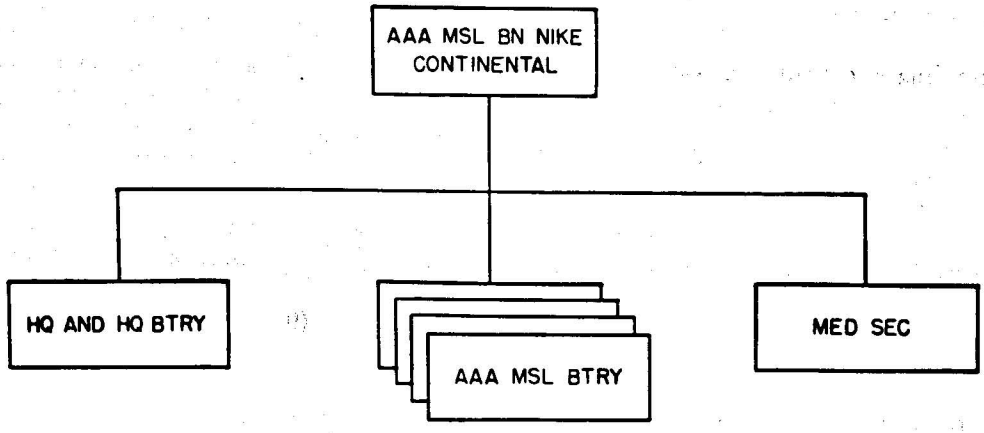


*Figure 3. Nike I battalion.*

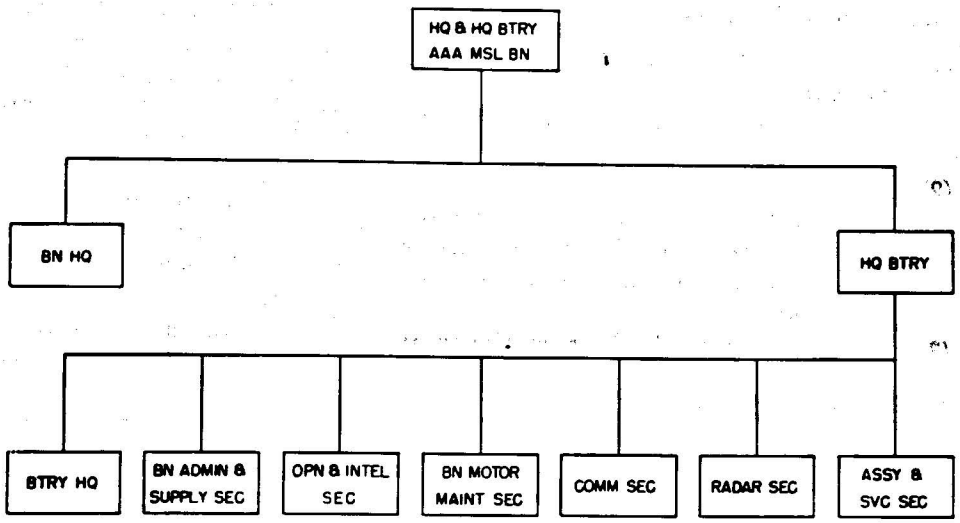


*Figure 4. Headquarters and headquarters battery.*

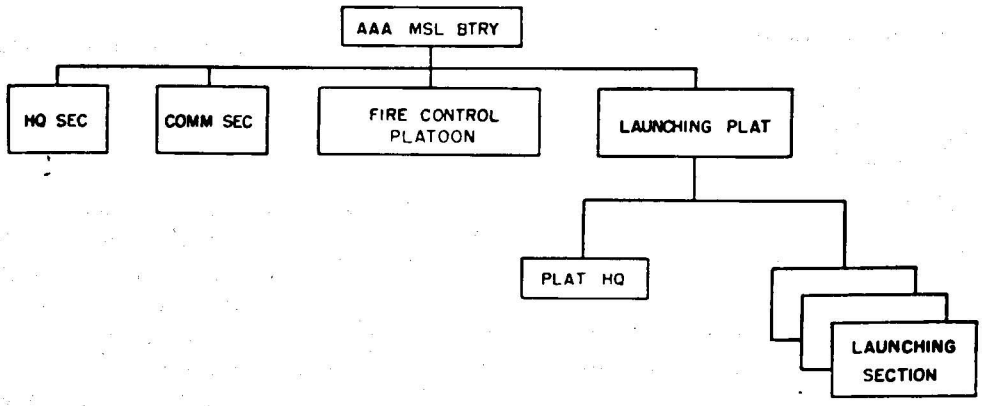


*Figure 5. AAA missile battery.*

of the fire control equipment in the battery control area.

*d. Launching Platoon.* The launching platoon consists of one launching platoon headquarters and three launching sections.

*e. Launching Platoon Headquarters.* The launching platoon headquarters is responsible for the operation and training of the three launching sections. It contains technically trained personnel to assemble, test, and perform organizational maintenance on the Nike I missile and booster and launching section equipment. It is responsible for

mbling and testing missiles and boosters, and the maintenance of the rounds at the launching ion.

*Launching Section.* The three launching sec- s are responsible for the preparation of the sile and booster for firing after they have been vered to the launching section from the assem- and test area and for routine nontechnical s, checks, adjustments, and organizational intenance.

## Manning Personnel

. The following personnel are required to man equipment and engage designated targets.

(1) One early warning plotter, stationed at the early warning plotting board in the battery control trailer, who plots the early warning information.

(2) One acquisition radar operator, stationed at the acquisition control panel on the battery control console in the battery control trailer, who operates the acquisition radar.

(3) One battery control officer, stationed at the PPI on the battery control console in the battery control trailer. This officer is in overall charge during a tactical engagement. He directs the intrabattery alert status, designates the targets to be engaged, and fires the rounds.

(4) One computer operator, stationed at the tactical control panel on the battery control console in the battery control trailer, who operates the computer and the plotting boards.

(5) One generator specialist, stationed at the generators or power source, who operates the generators and frequency changes (converters).

(6) One switchboard operator, stationed at the event recorder and switchboard cabinet assembly in the battery control trailer, who operates the switchboard and event recorder.

(7) One missile-tracking radar operator, stationed at the missile console in the radar control trailer, who operates the missile tracking radar.

(8) One target-tracking radar azimuth operator, stationed at the azimuth indicator on the target console in the radar control trailer. This operator initially acquires the designated target on the precision indicator and then operates the target-tracking radar in azimuth. He has communications with other parts of the battery as required.

(9) One target-tracking radar elevation operator, stationed at the elevation indicator on the target console in the radar control trailer, who operates the target-tracking radar in elevation.

(10) One target-tracking radar range operator, stationed at the range indicator on the target console in the radar control trailer, who operates the target-tracking radar in range.

(11) One launching control officer, stationed at the officer's desk in the launching control trailer, who is in charge of the launching area.

(12) One panel operator, stationed at the launching control console in the launching control trailer, who operates the launching control panel.

(13) One switchboard operator, stationed at the switchboard in the launching control trailer, who operates the launching control trailer switchboard.

(14) One chief of section for each launching section, stationed at the launching section, who is in charge of the section.

(15) One panel operator per section, stationed at the launching section control console, who operates the firing panel on launching section control console.

(16) Four launcher crewmen for each underground section in the underground storage magazine type installation, or 2 launcher crewmen per launcher in the aboveground type installation. These crewmen prepare the round for firing by completing specified duties during the alert statuses, and perform routine and periodic checks, tests, and adjustments under the supervision of the chief of section, a guided missile mechanic, and an electronic specialist.

(17) One generator specialist per launching section, stationed at the generator or

power source, who operates the generator and the frequency changer (converter).

*b.* The following personnel are required to assemble and test the missile and booster in the assembly area:

(1) One assembly sergeant, who is in charge of the assembly area operations and personnel.

(2) Two missile mechanics, who perform the more complex mechanical duties in assembling, testing, and repairing missiles and boosters. This includes testing the hydraulic and propulsion system, replacing defective components, fueling, and handling and storing explosive components.

(3) One electronic specialist, who performs the more complex electrical and electronic duties in assembling, testing, and repairing missiles and boosters.

(4) One air compressor operator, who operates the air compressors and assists in missile and booster assembly and tests.

(5) One crane operator, who operates the crane, and assists in missile and booster assembly and tests.

(6) Three launcher crewmen, who perform the less complex duties in missile and booster assembly and test under the supervision of the assembly sergeant, a missile mechanic, and an electronic specialist.

*c.* The following personnel are required to make the emergency prefiring checks on the battery control area equipment:

(1) One chief of section, who is in charge.

(2) One fire control mechanic, who performs the more complex tests and adjustments on the fire control equipment.

(3) One missile tracking-radar operator, who operates the missile-tracking radar.

(4) One target-tracking radar azimuth operator, who operates the target-tracking radar in azimuth.

(5) One target-tracking radar elevation operator, who operates the target-tracking radar in elevation.

(6) One target-tracking radar range operator, who operates the target-tracking radar in range.

(7) One computer operator, who operates the computer.

(8) One acquisition radar operator, who operates the acquisition radar.

(9) One generator specialist, who operates the generators and the frequency converters.

*d.* The following personnel are required to make the launching area periodic tests, checks, and adjustments:

(1) One chief of section, who is in charge.

(2) One electronic specialist, who performs the more complex electrical and electronic tests and adjustments.

(3) One launching section panel operator, who operates the launching section firing panel.

(4) Two launcher crewmen, who perform tests, checks, and adjustments under the supervision of the chief of section, and the electronic specialist.

(5) One generator specialist at each launching section, who operates the generators and frequency converters.

(6) One panel operator at the launching control console in the launching control trailer, who operates the launching control console.

(7) One missile-tracking radar operator, who operates the missile-tracking radar.

(8) One generator specialist, who operates the radar control trailer generator and frequency converter.

(9) One generator specialist, who operates the launching control trailer generator and frequency converter.

*e.* The following personnel are required to make the launching area routine tests, checks, and adjustments:

(1) One chief of section, who is in charge.

(2) One panel operator, who operates the launching section console.

(3) Four launcher crewmen, who perform the tests, checks, and adjustments under the supervision of the chief of section.

(4) One generator specialist at the launching section performing the tests who operates the generator and frequency converter.

# CHAPTER 2

# FIRE CONTROL AND LAUNCHING EQUIPMENT

## Section I. BATTERY CONTROL AREA EQUIPMENT

### . Equipment

The battery control area contains the necessary uipment to acquire designated targets, initiate nmands to fire the rounds from the launching ea, control the missile during flight, and auto- atically record certain events incident to these erations. The major items of equipment are e battery control trailer, radar control trailer, quisition radar, missile-tracking radar, target- acking radar, radar collimation mast assembly, dar rf test set, and maintenance and spares ailer.

### 5. Battery Control Trailer

(fig. 6)

The battery control trailer is the tactical con- ol center of the Nike battery. This trailer con- ins the computer assembly, the acquisition radar binet assembly, the battery control console as- mbly, and the plotting and event recording uipment. A battery control junction box and acquisition radar junction box facilitate com- eting the electrical connections between the trailer and other parts of the battery. All of the equipment except the junction box is housed in ten major cabinet assemblies. Seven of these assemblies contain electronic equipment. The other three are the heating and ventilating cabinet assembly, the utility cabinet assembly, and the equipment-cooling cabinet assembly. All of the equipment is mounted in a van-type trailer.

*a. Battery Control Console Assembly.* This assembly is located against the curbside wall and to the front of the battery control trailer. It contains several subassemblies, including the PPI scope, the target designate control panel, the tactical control panel, the acquisition control panel, the horizontal plotting board, the altitude plotting board, and the plotting board controls. Some of the controls and indicators for three of the operators stationed in the battery control trailer are on the battery control console assembly. Figure 7 shows the battery control console.

(1) *Acquisition control panel.* Figure 8 and table I show the indicators and controls for the acquisition control panel.

*Table I. Acquisition Control Panel*

| em | Title | Type | Function |
|---|---|---|---|
| 1 | MAGNETRON—HV SUPPLY. | Meter | Indicates the amplitude of either the acquisition magnetron current, acquisition high voltage, or acquisition high voltage power supply current, as determined by the position of the MAGNETRON meter lever switch. |
| 2 | AFC-HUNT | Indicator light | When flickering or out indicates that the automatic frequency-control system has locked on the correct operating point. |
| 3 | AFC-OFF | Toggle switch | When placed in the ON position, energizes the acquisition automatic frequency control unit. |
| 4 | FREQUENCY | Meter | Indicates in what part of the frequency band the acquisition radar magnetron is operating. |
| 5 | FREQUENCY-INCREASE-DECREASE. | Toggle switch | Adjusts the frequency of the acquisition radar magnetron. |
| 6 | AFC-RELEASE | Pushbutton | When depressed, breaks an automatic frequency control system lock on the incorrect operating point. |
| 7 | IFF-GTC | Toggle switch | Determines the gain time constant being used in the IFF equipment. |

*Table I. Acquisition Control Panel*—Continued

| Item | Title | Type | Function |
|---|---|---|---|
| 8 | AZIMUTH-ANTENNA | Rotary switch (4-position). | Determines the rate of rotation of the acquisition antenna. |
| 9 | ANTENNA-ELEVATION | Dial | Indicates the elevation angle of the acquisition antenna beam. |
| 10 | ANTENNA-ELEVATION | Toggle switch | Adjusts the elevation angle of the acquisition antenna beam. |
| 11 | IFF-ON | Indicator light | When illuminated, indicates that the IFF equipment is energized. |
| 12 | MODE | Toggle switch | Determines the mode of operation of the IFF equipment. |
| 13 | GAIN | Control knob | Adjusts the gain of the IFF equipment. |
| 14 | FOE | Pushbutton | When depressed, signals that the challenged target is a foe. |
| 15 | CHALLENGE | Indicator light | When illuminated, indicates that the observed target is being challenged. |
| 16 | CHALLENGE | Pushbutton | When depressed, challenges the observed target. |
| 17 | CHOP | Toggle switch | When placed in the CHOP position, gives a broken trace for the IFF return to facilitate return signal discrimination. |
| 18 | FRIEND | Pushbutton | When depressed, signals that the challenged target is friend. |
| 19 | RANGE | Control knob | Adjusts the range of the moving target indicator circuit. |
| 20 | OFF | Toggle switch | When placed in the ON position, energizes the moving target indicator circuit. |
| 21 | STC | Control knob | Adjust the amplitude of the sensitivity time control pulse. |
| 22 | GAIN | Control knob | Adjusts the gain on the acquisition intermediate frequency amplifier. |
| 23 | OFF | Toggle switch | When placed in the ON position, energizes the indicator high voltage power supply for the indicators on the battery control console. |
| 24 | IND HV-ON | Indicator light | When illuminated, indicates that the indicator high voltage power supply is energized. |
| 25 | HV SUPPLY-ON | Pushbutton | When depressed, energizes the acquisition high voltage power supply. |
| 26 | HV SUPPLY-ON | Indicator light | When illuminated, indicates that the acquisition high voltage power supply is energized. |
| 27 | HV SUPPLY-OFF | Pushbutton | When depressed, deenergizes the acquisition high voltage power supply. |
| 28 | HV SUPPLY-READY | Indicator light | When illuminated, indicates that the acquisition high voltage power supply is ready to be energized. |
| 29 | HV SUPPLY | Control knob | Adjusts the amplitude of the acquisition high voltage. |
| 30 | MAGNETRON-HV SUPPLY | Lever switch | Determines whether the MAGNETRON-HV SUPPLY meter reads current or voltage. |

(2) *Precision indicator, PPI, and target designate control panel.* Figure 9 and tables II, III, and IV show the indicators and controls for the precision indicator, plan position indicator, and the target designate control panel.

*Table II. Precision Indicator*

| Item | Title | Type | Function |
|---|---|---|---|
| 1 | TRACK-ACQ | Rotary switch (2-position). | Not used: This switch is provided for use when the D-153877 precision indicator is used as a component of the M33 antiaircraft fire control system. It is normally left in *ACQ* position in the Nike I system. |
| 2 | INTENSITY | Control knob | Adjusts the intensity of the precision indicator sweep. |
| 3 | GAIN | Control knob | Adjusts the gain of the precision indicator. |

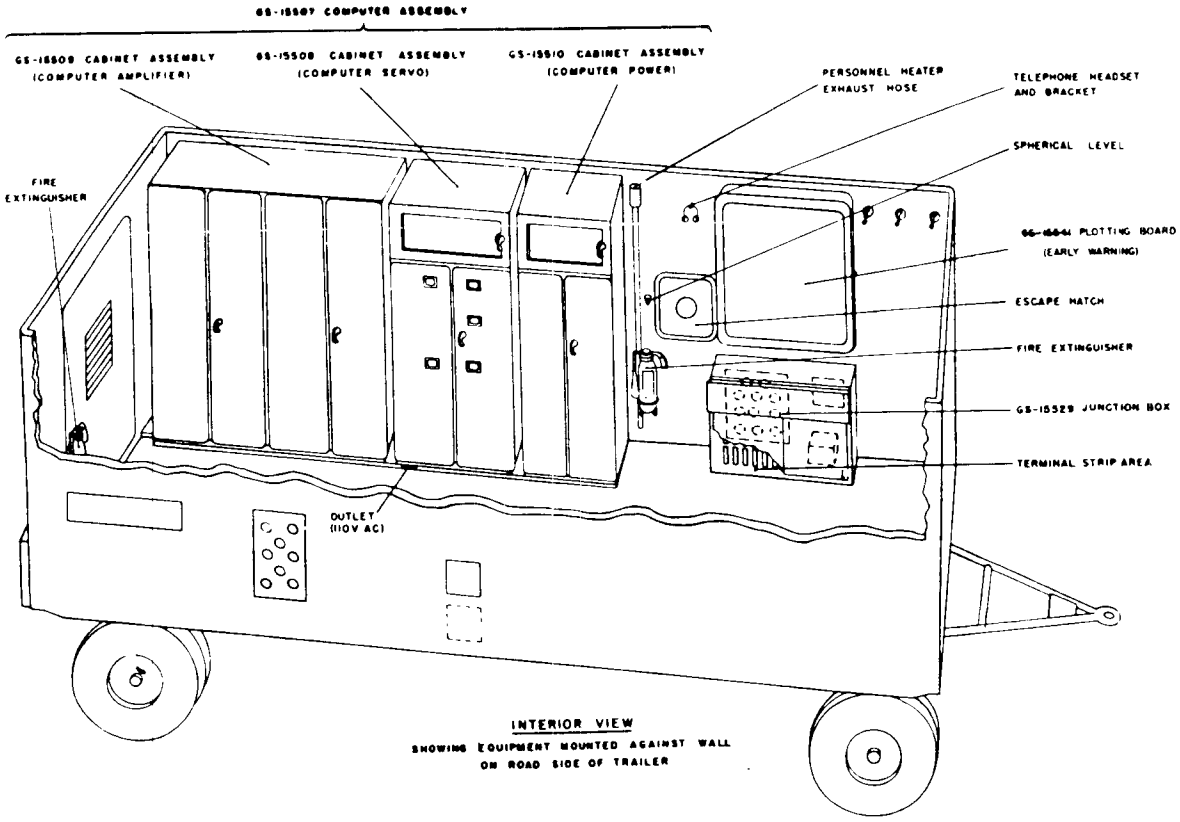


INTERIOR VIEW
SHOWING EQUIPMENT MOUNTED AGAINST WALL ON ROAD SIDE OF TRAILER

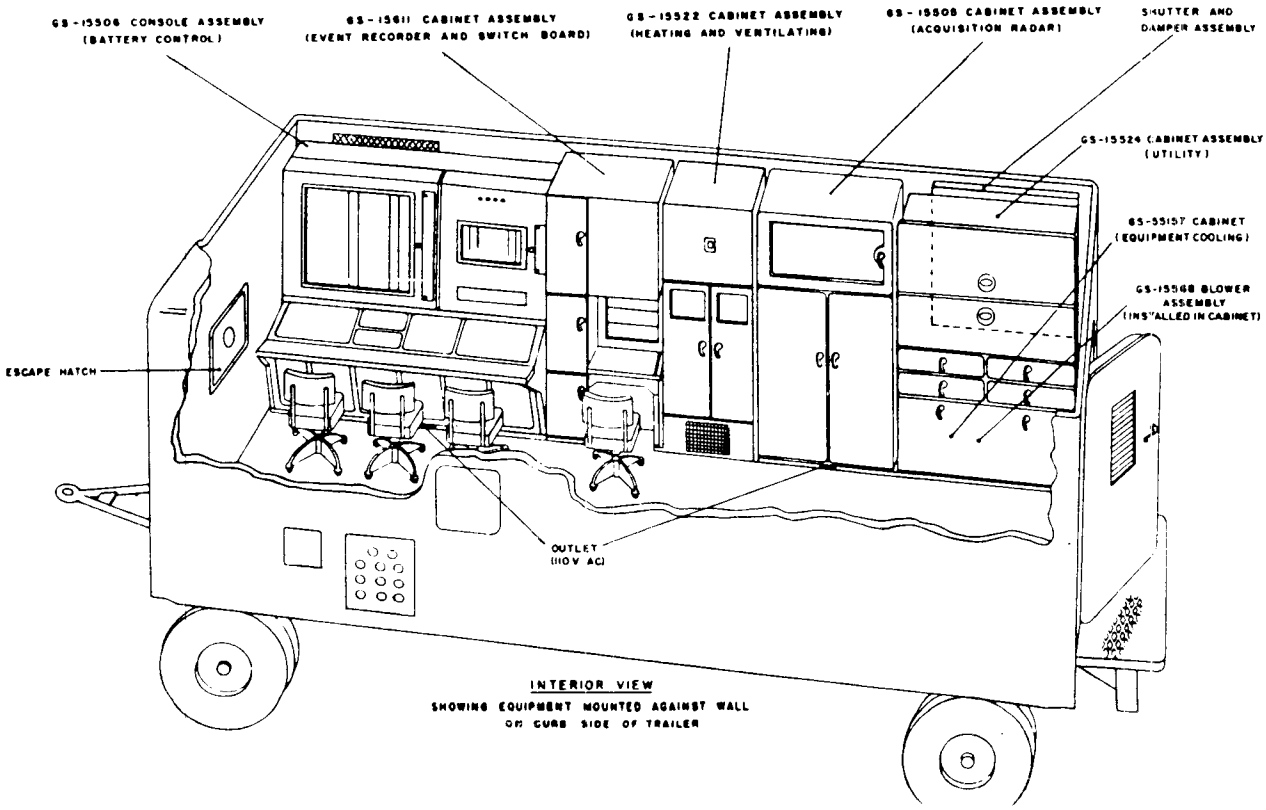


INTERIOR VIEW
SHOWING EQUIPMENT MOUNTED AGAINST WALL ON CURB SIDE OF TRAILER

*Figure 6. Battery control trailer.*

*Table III. Plan Position Indicator*

| Item | Title | Type | Function |
|---|---|---|---|
| 1 | LIGHTS | Control knob | Adjusts the illumination of the dial surrounding the circumference of the PPI face. |
| 2 | INTENSITY | Control knob | Adjusts the intensity of the PPI sweep. |
| 3 | GAIN | Control knob | Adjusts the gain of the PPI. |
| 4 | RANGE | Rotary switch (2-position). | Determines the range presented on the PPI. |

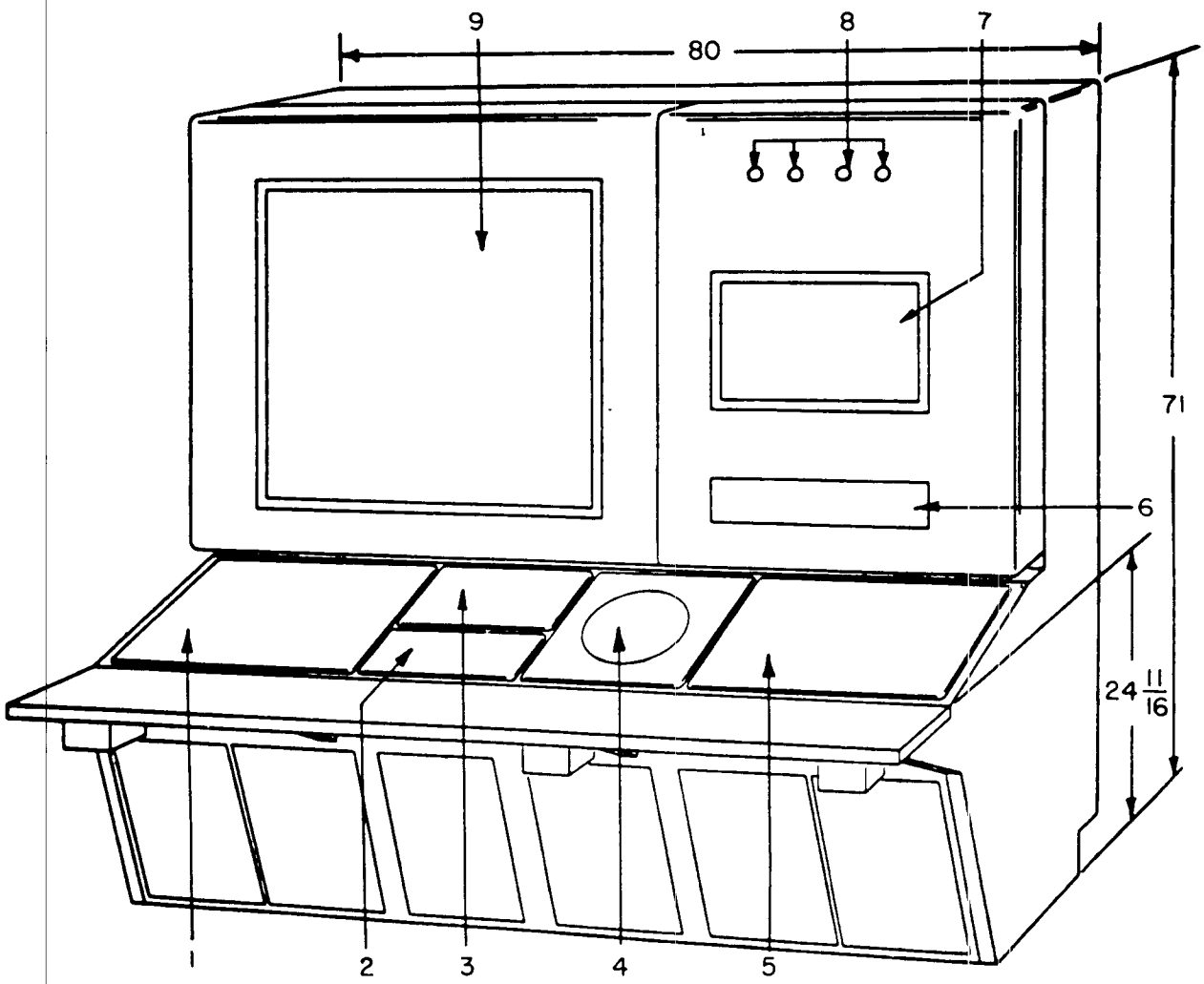


1. ACQUISITION CONTROL PANEL
2. TARGET DESIGNATE CONTROL PANEL
3. PRECISION INDICATOR
4. PLAN POSITION INDICATOR
5. TACTICAL CONTROL PANEL
6. TACTICAL CONTROL SIGNAL PANEL
7. ALTITUDE PLOTTING BOARD
8. ALERT STATUS LAMPS
9. HORIZONTAL PLOTTING BOARD

*Figure 7. Battery control console assembly.*

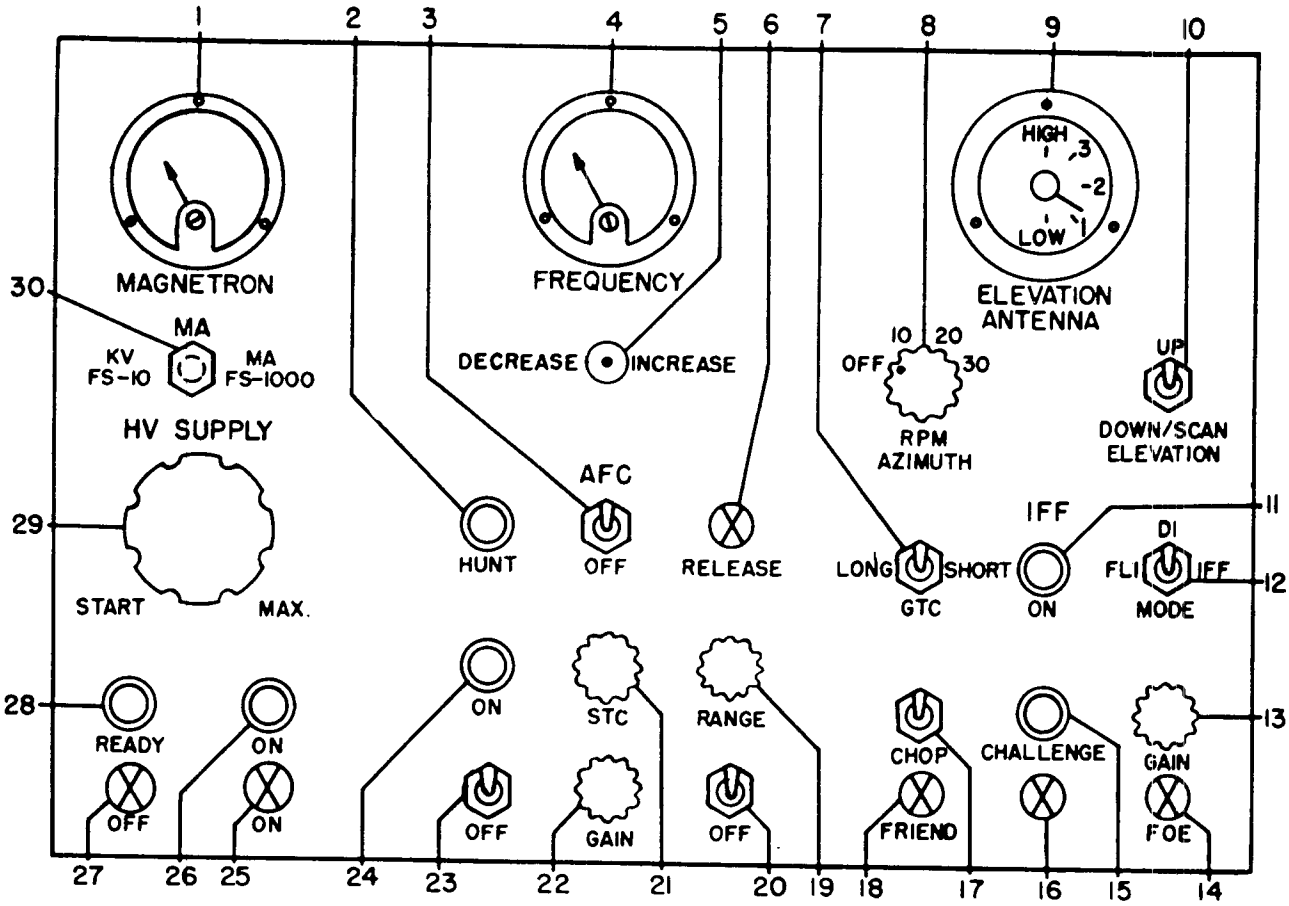


*Figure 8. Acquisition control panel.*

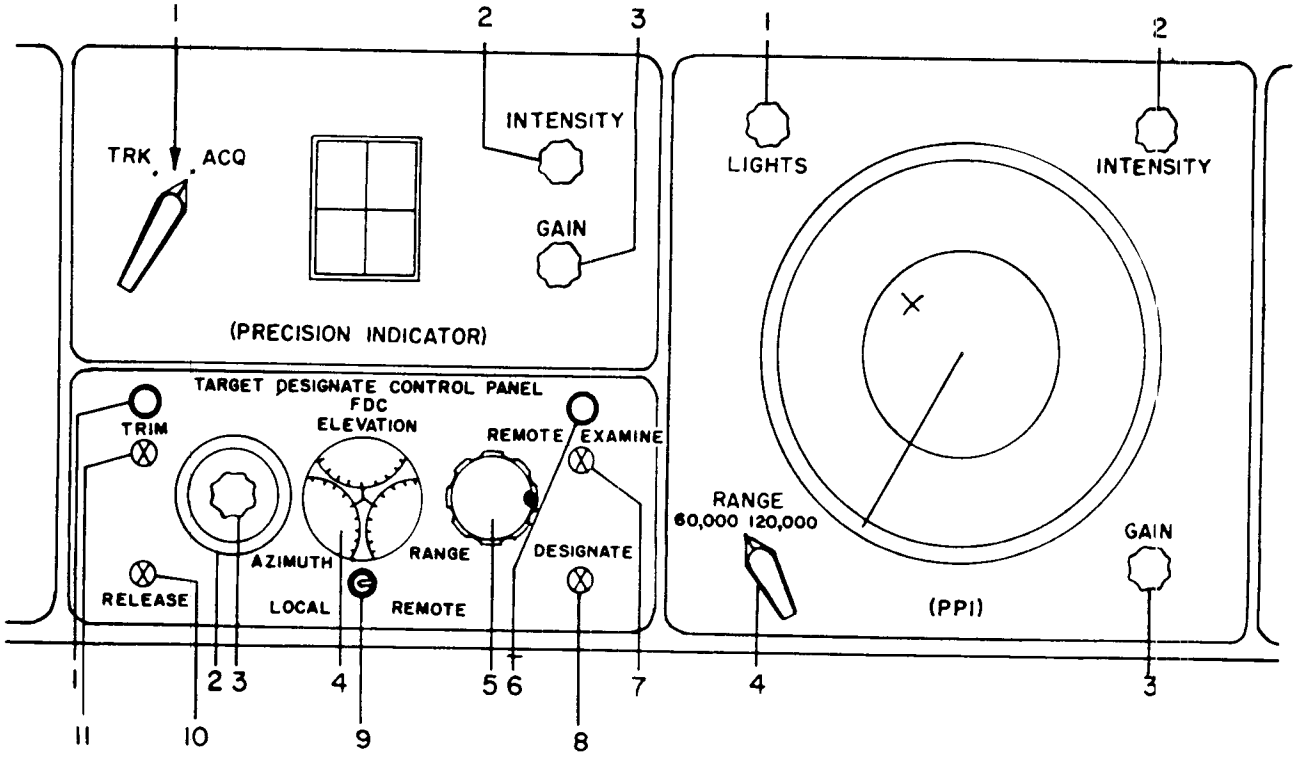


*Figure 9. Precision indicator, plan position indicator, and target designate control panel.*

*Table IV. Target Designate Control Panel*

| Item | Title | Type | Function |
|---|---|---|---|
| 1 | TRIM | Indicator light (red) | When illuminated, indicates that the trim circuit is energized. |
| 2 | AZIMUTH | Ring-depress switch | When depressed, blanks PPI and displays a steady steerable azimuth line. |
| 3 | AZIMUTH | Control knob | Fine adjustment for the steerable azimuth line. |
| 4 | FDC ELEVATION-RANGE-AZIMUTH. | Dial | Indicates the FDC target position in each of the 3 coordinates when the remote examine circuit is energized. When remote examine switch is in LOCAL, indicates azimuth and range settings of the PPI sweep. |
| 5 | RANGE | Handwheel | When rotated, determines the position of the range circle on the PPI. |
| 6 | REMOTE EXAMINE | Indicator light (red) | When illuminated, indicates that the remote examine circuit is energized. |
| 7 | REMOTE EXAMINE | Pushbutton | When depressed, if the REMOTE-LOCAL toggle switch is in the REMOTE position, positions the azimuth line and range circle to the FDC target. |
| 8 | DESIGNATE-ABANDON | Toggle switch | Determines whether a new target is designated or a target being tracked is to be abandoned. |
| 9 | REMOTE-LOCAL | Toggle switch | Determines whether FDC or local target information is to be used. |
| 10 | RELEASE | Pushbutton | When depressed, deenergizes the remote examine and trim circuits. |
| 11 | TRIM | Pushbutton | When depressed, permits use of the azimuth line and range circle controls for fine adjustment of the FDC information. |

(3) *Tactical control panel.* Figure 10 and table V show the indicators and controls for the tactical control panel.

*Table V. Tactical Control Panel*

| Item | Title | Type | Function |
|---|---|---|---|
| 1 | REMOTE-ALERT STATUS | Indicator light (white) | When illuminated, indicates that the fire direction center has signaled a white alert status. |
| 2 | REMOTE-ALERT STATUS | Indicator light (yellow) | When illuminated, indicates that the fire direction center has signaled a yellow alert status. |
| 3 | REMOTE-ALERT STATUS | Indicator light (blue) | When illuminated, indicates that the fire direction center has signaled a blue alert status. |
| 4 | REMOTE-ALERT STATUS | Indicator light (red) | When illuminated, indicates the fire direction center has signaled a red alert status. |
| 5 | REMOTE-FIRE | Indicator light (green) | When illuminated, indicates that the fire direction center has signaled the battery to fire a round. |
| 6 | REMOTE-COUNTERMAND | Indicator light (red) | When illuminated, indicates that the fire direction center has signaled that the current action be halted. |
| 7 | TARGET GROUND SPEED | Meter | Indicates the ground speed of the tracked target. |
| 8 | FIN ORDERS | Meter (dual) | Indicates, in g's, the Y and P fin orders being sent to the missile. |
| 9 | MISSILE SPEED | Meter | Indicates the missile velocity along the missile velocity vector. |
| 10 | PLOTTING LIGHTS-HORIZONTAL. | Control knob | Adjusts the intensity of the horizontal plotting board lights. |
| 11 | PLOTTING LIGHTS-ALTITUDE. | Control knob | Adjusts the intensity of the altitude plotting board lights. |
| 12 | CEILING LIGHTS | Toggle switch | Determines whether the trailer ceiling lights are at full brilliance or if they may be controlled by the CEILING LIGHTS knob. |

*Table V. Tactical Control Panel*—Continued

| Item | Title | Type | Function |
|---|---|---|---|
| 13 | SIGNAL LIGHTS | Control knob | Adjusts the intensity of the battery control console signal lights. |
| 14 | GYRO AZIMUTH | Meter | Indicates the gyro azimuth of the predicted intercept point necessary to preset the roll amount gyro. |
| 15 | CEILING LIGHTS | Control knob | Adjusts the intensity of the trailer ceiling lights if the CEILING LIGHTS toggle switch is in the DIM position. |
| 16 | PEN INTERCHANGE | Pushbutton | When depressed, causes the right-hand and left-hand horizontal plotting board pens to interchange the data they are plotting if computer condition switch is in PRELAUNCH AND INITIAL TURN position. |
| 17 | COMPUTER-OVERLOAD | Indicator light (amber) | When flashing, indicates a computer amplifier unbalance. |
| 18 | COMPUTER-TEST | Indicator light (red) | When illuminated indicates that the computer is in the TEST condition. |
| 19 | Plotting board | Rotary switch (5-position). | Determines the operating condition of the horizontal and altitude plotting board pens. |
| 20 | GYRO LIMIT | Indicator light (red) | When illuminated, indicates that the turn angle servo has reached the gimbal limit stops. |
| 21 | PEN LIFT | Pushbutton | When depressed, causes the pens to lift from the horizontal and vertical plotting board surfaces. |
| 22 | BURST DISABLE | Toggle switch (with protector). | When placed in the ON position, prevents the burst order from being sent to the missile. |
| 23 | SIREN | Pushbutton | When depressed, energizes a siren to alert the battery personnel. |
| 24 | BURST | Toggle switch (with protector). | When placed in the ON position, causes the burst order to be sent to the missile. |
| 25 | FIRE | Toggle switch (with protector). | When placed in the ON position, causes the missile to be fired. |
| 26 | ALERT STATUS | Rotary switch (4-position). | Signals to the battery the prevailing alert status. |
| 27 | LOCAL-READY | Indicator light (green) | When illuminated, indicates that the battery is prepared for an engagement. |
| 28 | OUT OF ACTION | Indicator light (red) | When illuminated, indicates battery is not prepared for action. |
| 29 | LOCAL-READY-OUT OF ACTION. | Toggle switch | Signals whether the battery is prepared for an engagement. |
| 30 | REMOTE-ADVANCE | Indicator light (amber) | When illuminated, indicates that the battery is receiving advanced target data from the fire direction center. |
| 31 | ACKNOWLEDGE | Pushbutton | When depressed, signals the fire direction center that an order has been received. |
| 32 | REMOTE-CEASE FIRE | Indicator light (red) | When illuminated, indicates that the fire direction center has signaled the battery to cease firing. |
| 33 | REMOTE-HOLD FIRE | Indicator light (amber) | When illuminated, indicates that the fire direction center has signaled the battery to hold its fire. |

(4) *Horizontal plotting board.* Figure 11 and table VI show the indicators and controls on the horizontal plotting board.

(5) *Altitude plotting board and tactical control signal panel.* Figure 12 and tables VII and VIII show the indicators and controls on the altitude plotting board, and the tactical control signal panel, and the alert status indicator lights.

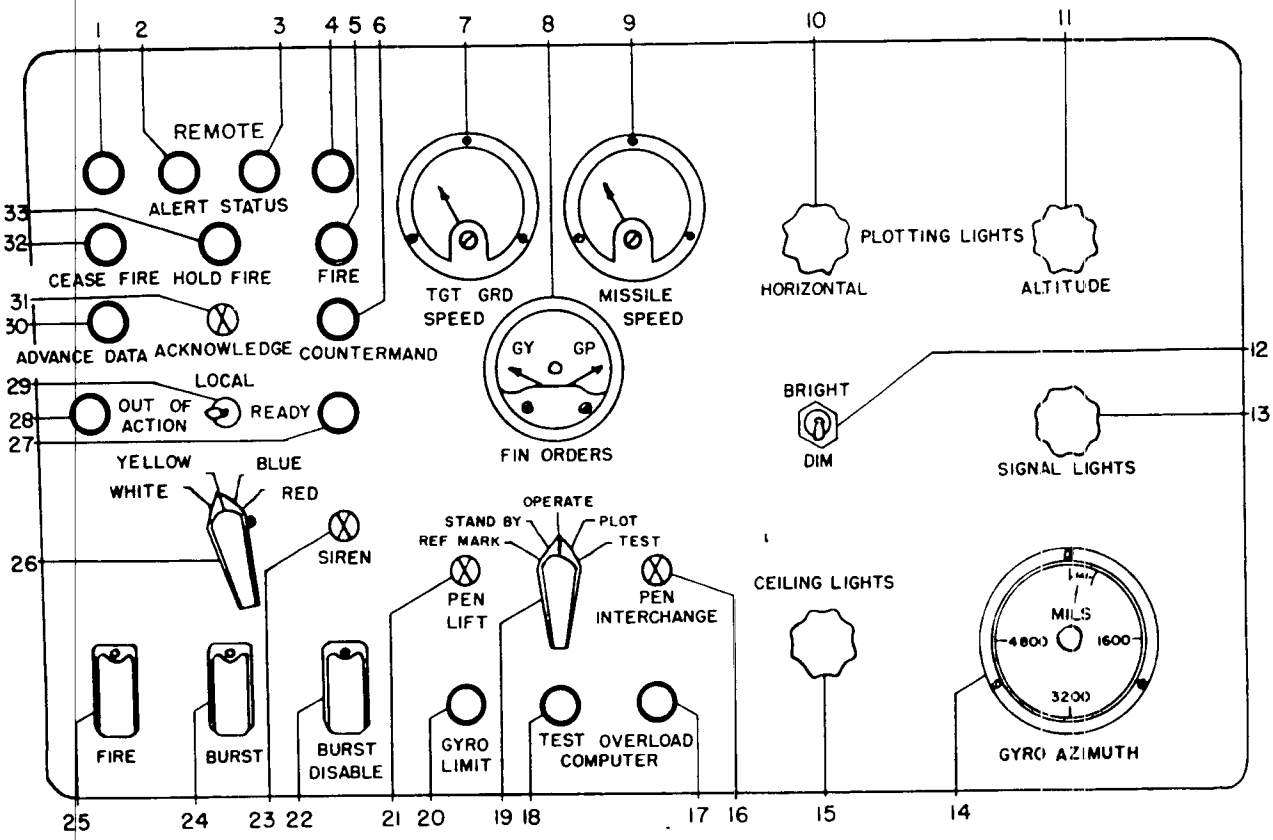


*Figure 10. Tactical control panel.*

*Table VI. Horizontal Plotting Board*

| Item | Title | Type | Function |
|---|---|---|---|
| 1 | TARGET | Indicator | When illuminated, indicates that the right-hand pen is plotting target coordinates. |
| 2 | MISSILE | Indicator | When illuminated, indicates that the right-hand pen is plotting missile coordinates. |
| 3 | TARGET | Indicator | When illuminated, indicates that the left-hand pen is plotting target coordinates. |
| 4 | MISSILE | Indicator | When illuminated, indicates that the left-hand pen is plotting missile coordinates. |
| 5 | WINDOW RELEASE | Pushbutton | When depressed, unlocks window. |

*Table VII. Altitude Plotting Board and Alert Status Lights*

| Item | Title | Type | Function |
|---|---|---|---|
| 1 | Paper control | Door | Gives access to the plotting paper for the horizontal plotting board and to pen adjustments. |
| 2 | Alert status | Indicator light (white) | When illuminated, indicates that the white alert status prevails. |
| 3 | Alert status | Indicator light (yellow) | When illuminated, indicates that the yellow alert status prevails. |
| 4 | Alert status | Indicator light (blue) | When illuminated, indicates that the blue alert status prevails. |
| 5 | Alert status | Indicator light (red) | When illuminated, indicates that the red alert status prevails. |
| 6 | Paper control | Door | Gives access to the plotting paper for the altitude plotting board and to pen adjustments. |
| 7 | Windown release | Pushbutton | When depressed, releases the window of the altitude plotting board so that it may be opened. |



370064 O—56——2

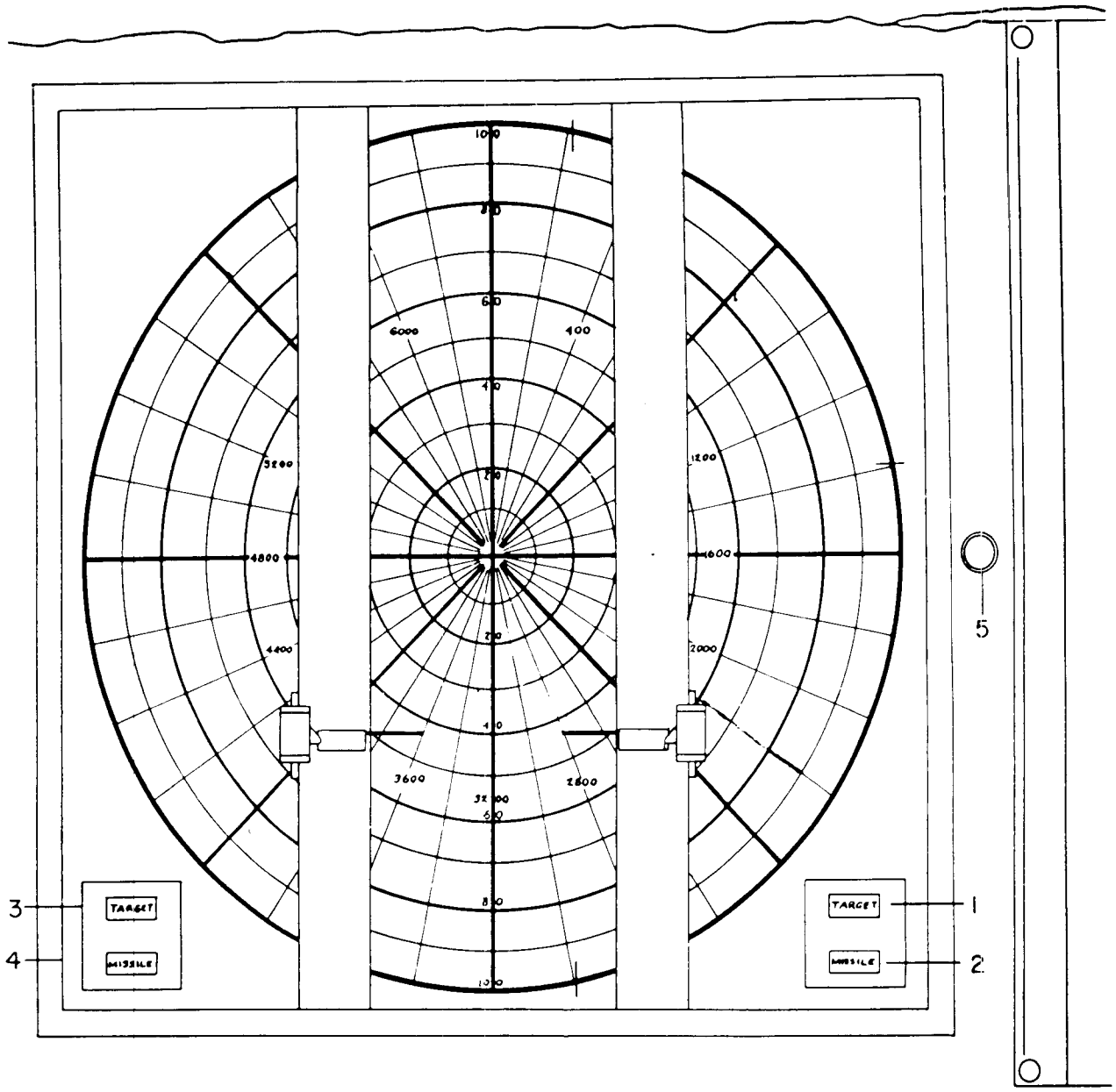


*Figure 11. Horizontal plotting board.*

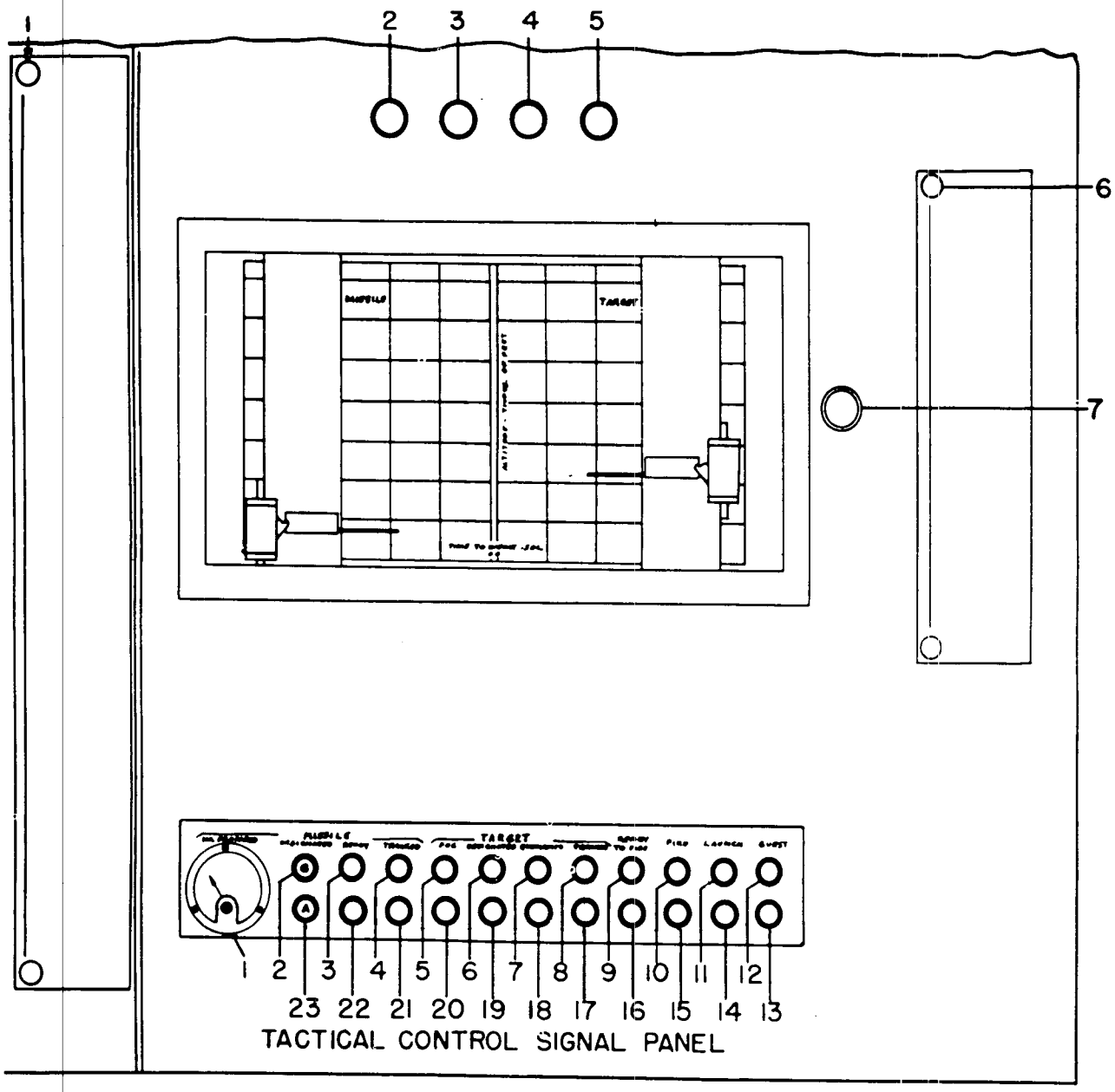


*Figure 12. Altitude plotting board and tactical control signal panel.*

*Table VIII. Tactical Control Signal Panel*

| Item | Title | Type | Function |
|---|---|---|---|
| 1 | MISSILE-NO. PREPARED | Meter | Indicates the number of missiles that are prepared for firing. |
| 2 | MISSILE-DESIGNATED | Indicator light (green) | When illuminated, indicates that a missile (launcher) has been designated and a section selected. |
| 3 | MISSILE-READY | Indicator light (green) | When illuminated, indicates that the designated missile is ready to be fired. |
| 4 | MISSILE-TRACKED | Indicator light (green) | When illuminated, indicates that a missile is being tracked. |
| 5 | TARGET-FOE | Indicator light (green) | When illuminated, indicates that the target is a foe. |
| 6 | TARGET-DESIGNATE | Indicator light (green) | When illuminated, indicates that the target has been designated by the battery control officer. |
| 7 | TARGET-CONFIRMED | Indicator light (green) | When illuminated, indicates that the target is being acquired by the target-tracking radar operators. |
| 8 | TARGET-TRACKED | Indicator light (green) | When illuminated, indicates that the target is being tracked. |
| 9 | READY TO FIRE | Indicator light (green) | When illuminated, indicates that the system is prepared for firing. |
| 10 | FIRE | Indicator light (green) | When illuminated, indicates that the fire order has been initiated. |
| 11 | LAUNCH | Indicator light (green) | When illuminated, indicates that the missile has been launched. |
| 12 | BURST | Indicator light (green) | When illuminated, indicates that the burst order has been initiated. |
| 13 | BURST | Indicator light (amber) | When illuminated, indicates that the burst order has not been initiated. |
| 14 | LAUNCH | Indicator light (amber) | When illuminated, indicates that the missile has not been launched. |
| 15 | FIRE | Indicator light (amber) | When illuminated, indicates that the fire order has not been initiated. |
| 16 | READY TO FIRE | Indicator light (amber) | When illuminated, indicates that the system is not prepared for firing. |
| 17 | TARGET-TRACKED | Indicator light (amber) | When illuminated, indicates that the target is not being tracked. |
| 18 | TARGET-CONFIRMED | Indicator light (amber) | When illuminated, indicates that the designated target has not been confirmed. |
| 19 | TARGET-DESIGNATED | Indicator light (amber) | When illuminated, indicates that a target has not been designated. |
| 20 | TARGET-FOE | Indicator light (amber) | When illuminated, indicates that a target has not been designated as a foe. |
| 21 | MISSILE-TRACKED | Indicator light (amber) | When illuminated, indicates that a missile has not been tracked. |
| 22 | MISSILE-READY | Indicator light (amber) | When illuminated, indicates that a missile is not ready for firing. |
| 23 | MISSILE-DESIGNATED | Indicator light (amber) | When illuminated, indicates that a missile has not been designated. |

*b. Computer Assembly.* The computer assembly occupies the rear two-thirds of the roadside wall of the trailer (fig. 6). It is made up of the following:

(1) *Computer amplifier cabinet* (fig. 13). The computer amplifier cabinet is the extreme left part of the computer assembly. This cabinet consists of a forward and aft section. Each section has components mounted in two depths, front (first) and rear (second). The rear section is mounted against the roadwise wall of the trailer. The front depth is mounted on a large swinging panel or frame which can be swung outward, making the components mounted in the rear depth more accessible.

(2) *Computer servo cabinet.* This cabinet is located in the center of the roadside wall of the battery control trailer. It consists of the computer control panel, a dead time unit, and the following servos: time-to-intercept and predicted time of flight, climb angle, turn angle, gyro azimuth, and ballistic elevation. Figure 14 shows the computer servo cabinet. Tables IX and X show the controls and indicators located on the computer control panel.

*Table IX. Computer Servo Cabinet*

| Item | Title | Type | Function |
|---|---|---|---|
| 1 | TURN ANGLE | Dial | Indicates the setting of the turn angle servo. |
| 2 | TIME TO IMPACT | Dial | Indicates the setting of the time-to-intercept servo. |
| 3 | BALLISTIC EL | Dial | Indicates the elevation setting of the ballistic servo. |
| 4 | GYRO AZIMUTH | Dial | Indicates the setting of the gyro azimuth servo. |
| 5 | CLIMB ANGLE | Dial | Indicates the setting of the climb angle servo. |

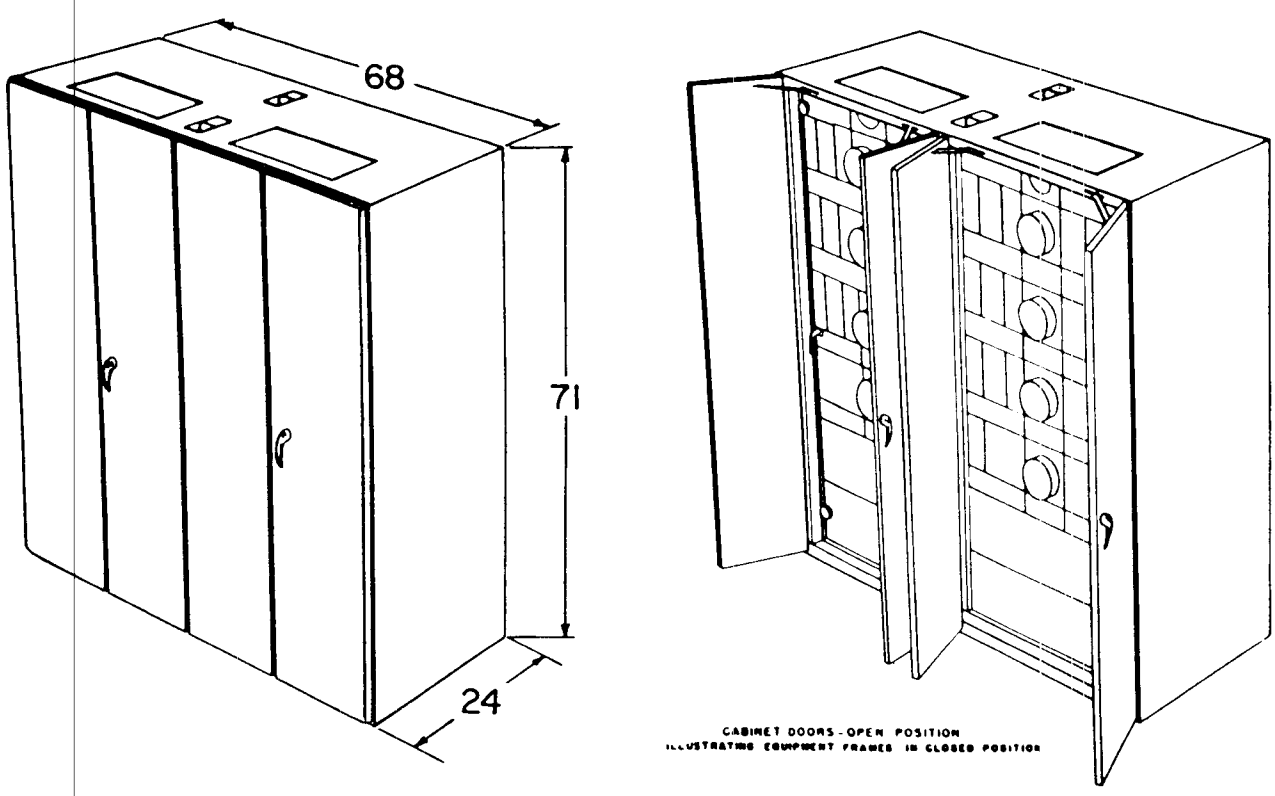


*Figure 13. Computer amplifier cabinet.*

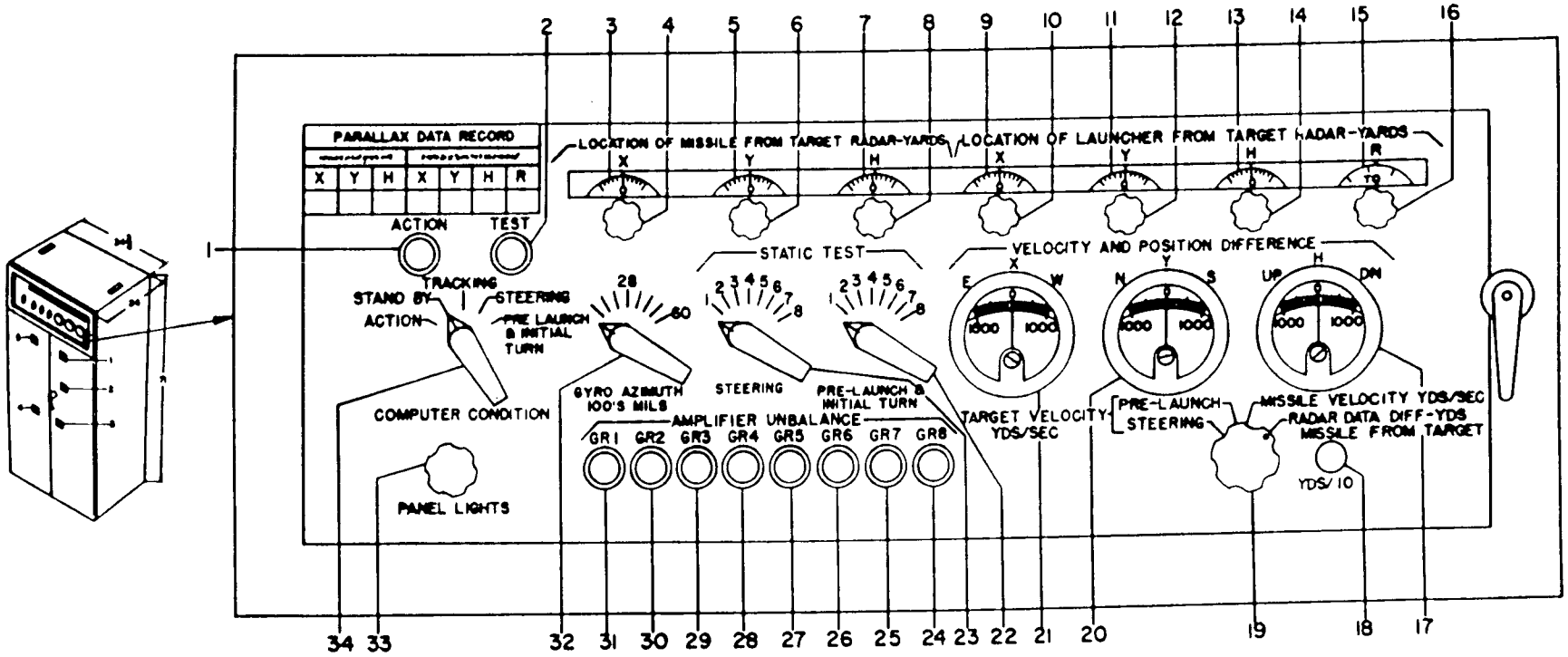


*Figure 14. Computer servo cabinet.*

*Table X. Computor Control Panel*

| Item | Title | Type | Function |
|---|---|---|---|
| 1 | ACTION | Indicator light (green) | When illuminated, indicates that the computer is in the ACTION condition. |
| 2 | TEST | Indicator light (red) | When illuminated, indicates that the computer is in a TEST condition. |
| 3 | LOCATION OF MISSILE RADAR FROM TARGET RADAR-YARDS–X. | Dial | Indicates the X parallax distance in yards, between the missile-tracking radar and the target-tracking radar. |
| 4 | LOCATION OF MISSILE RADAR FROM TARGET RADAR-YARDS–X. | Control knob | Adjusts the potentiometer setting for the X parallax distance between the missile tracking radar and the target-tracking radar. |
| 5 | LOCATION OF MISSILE RADAR FROM TARGET RADAR-YARDS–Y. | Dial | Indicates the Y parallax distance, in yards, between the missile-tracking radar and the target-tracking radar. |
| 6 | LOCATION OF MISSILE RADAR FROM TARGET RADAR-YARDS–Y. | Control knob | Adjusts the potentiometer setting for the Y parallax distance between the missile-tracking radar and the target-tracking radar. |
| 7 | LOCATION OF MISSILE RADAR FROM TARGET RADAR-YARDS–H. | Dial | Indicates the H parallax distance, in yards, between the missile-tracking radar and the target-tracking radar. |
| 8 | LOCATION OF MISSILE RADAR FROM TARGET RADAR-YARDS–H. | Control knob | Adjusts the potentiometer setting for the H parallax distance between the missile-tracking radar and the target tracking radar. |
| 9 | LOCATION OF LAUNCHER FROM TARGET RADAR-YARDS–X. | Dial | Indicates the X parallax distance, in yards, between the center of the launching area and the target-tracking radar. |
| 10 | LOCATION OF LAUNCHER FROM TARGET-RADAR YARDS–X. | Control knob | Adjusts the potentiometer setting for the X parallax distance between the center of the launching area and the target-tracking radar. |
| 11 | LOCATION OF LAUNCHER FROM TARGET RADAR-YARDS–Y. | Dial | Indicates the Y parallax distance, in yards, between the center of the launching area and the target-tracking radar. |
| 12 | LOCATION OF LAUNCHER FROM TARGET RADAR-YARDS–Y. | Control knob | Adjusts the potentiometer setting for the Y parallax distance between the center of the launching area and the target-tracking radar. |
| 13 | LOCATION OF LAUNCHER FROM TARGET RADAR-YARDS–H. | Dial | Indicates the H parallax distance, in yards, between the center of launching area and the target-tracking radar. |
| 14 | LOCATION OF LAUNCHER FROM TARGET RADAR-YARDS–H. | Control knob | Adjusts the potentiometer setting for the H parallax distance, in yards, between the center of the launching area and the target-tracking radar. |
| 15 | LOCATION OF LAUNCHER FROM TARGET RADAR-YARDS–R. | Dial | Indicates the R parallax distance, in yards, between the center of the launching area and the target-tracking radar. |
| 16 | LOCATION OF LAUNCHER FROM TARGET RADAR-YARDS–R. | Control knob | Adjusts the potentiometer setting for the R parallax distance, in yards, between the center of the launching area and target-tracking radar. |
| 17 | VELOCITY AND POSITION DIFFERENCE–H. | Meter | Indicates either the target or missile velocity or position difference in the H coordinate as determined by the velocity and position difference switch. |
| 18 | YDS/10 | Pushbutton | When depressed, enables the VELOCITY AND POSITION DIFFERENCE meters to be read more accurately. |
| 19 | VELOCITY AND POSITION DIFFERENCE. | Rotary switch (4-position). | Determines the data indicated on the VELOCITY AND POSITION DIFFERENCE meters. |
| 20 | VELOCITY AND POSITION DIFFERENCE–Y. | Meter | Indicates either the target or missile velocity or position difference in the Y coordinate as determined by the VELOCITY AND POSITION DIFFERENCE switch. |

*Table X. Computer Control Panel*—Continued

| Item | Title | Type | Function |
|---|---|---|---|
| 21 | VELOCITY AND POSITION DIFFERENCE-X. | Meter | Indicates either the target or missile velocity or position difference in the X coordinate as determined by the VELOCITY AND POSITION DIFFERENCE switch. |
| 22 | STATIC TEST-PRE-LAUNCH AND INITIAL TURN. | Rotary switch (8-position). | Determines the static test problem to be used in the prelaunch and initial turn computer tests. |
| 23 | STATIC TEST-STEERING | Rotary switch (8-position). | Determines the static test problem to be used in the computer steering tests. |
| 24 | AMPLIFIER UNBALANCE GR-8. | Indicator light (amber) | Flickers upon application of computer power and should extinguish after 5 seconds. If it remains illuminated, it indicates trouble in amplifier group 8. |
| 25 | AMPLIFIER UNBALANCE GR-7. | Indicator light (amber) | Flickers upon application of computer power and should extinguish after 5 seconds. If it remains illuminated, it indicates trouble in amplifier group 7. |
| 26 | AMPLIFIER UNBALANCE GR-6. | Indicator light (amber) | Flickers upon application of computer power and should extinguish after 5 seconds. If it remains illuminated, it indicates trouble in amplifier group 6. |
| 27 | AMPLIFIER UNBALANCE GR-5. | Indicator light (amber) | Flickers upon application of computer power and should extinguish after 5 seconds. If it remains illuminated, it indicates trouble in amplifier group 5. |
| 28 | AMPLIFIER UNBALANCE GR-4. | Indicator light (amber) | Flickers upon application of computer power and should extinguish after 5 seconds. If it remains illuminated, it indicates trouble in amplifier group 4. |
| 29 | AMPLIFIER UNBALANCE GR-3. | Indicator light (amber) | Flickers upon application of computer power and should extinguish after 5 seconds. If it remains illuminated, it indicates trouble in amplifier group 3. |
| 30 | AMPLIFIER UNBALANCE GR-2. | Indicator light (amber) | Flickers upon application of computer power and should extinguish after 5 seconds. If it remains illuminated, it indicates trouble in amplifier group 2. |
| 31 | AMPLIFIER UNBALANCE GR-1 | Indicator light (amber) | Flickers upon application of computer power and should extinguish after 5 seconds. If it remains illuminated, it indicates trouble in amplifier group 1. |
| 32 | GYRO AZIMUTH 100's MILS. | Rotary switch (8-position). | Determines the setting of the gyro azimuth servo. |
| 33 | SERVO LIGHTS | Control knob | Ajusts the intensity of the dial lights of the servo units. |
| 34 | COMPUTER CONDITION | Rotary switch (5-position). | Determines the condition of operation of the computer. |

(3) *Computer power cabinet.* This cabinet is located to the right of the computer servo cabinet. It contains the computer power control panel, and various power supplies and controls for the computer assembly. Figure 15 shows the computer power cabinet. Table XI shows the controls and indicators for the computer power control panel.

*Table XI. Computer Power Control Panel*

| Item | Title | Type | Function |
|---|---|---|---|
| 1 | COMPUTER POWER ON-FUZE INDICATOR. | Indicator light (red) | Indicates a blown fuze for each phase of 3-phase computer input voltage. |
| 2 | VOLTS CHECK | Meter | Indicates the amplitude of each of the low voltage supplies as determined by the VOLTS CHECK switch. |
| 3 | FILAMENTS REG | Indicator light (red) | Indicates a blown fuze for the regulated filament supplies. |
| 4 | FILAMENTS-UNREG | Indicator light (red) | Indicates a blown fuze for the unregulated filament supplies. |
| 5 | RECTIFIERS-320V A | Indicator light (red) | Indicates a blown fuze for the 320-volt A supply. |
| 6 | RECTIFIERS-320V B | Indicator light (red) | Indicates a blown fuze for the 320-volt B supply. |
| 7 | RECTIFIERS—320V BIAS | Indicator light (red) | Indicates a blown fuze for the 320-volt bias supply. |
| 8 | RECTIFIERS—270V | Indicator light (red) | Indicates a blown fuze for each of 270-volt supplies. |
| 9 | RECTIFIERS—FIL | Indicator light (red) | Indicates a blown fuze for the rectifier filament supplies. |
| 10 | INTLK OVERRIDE | Toggle switch | When placed in the ON position, shorts out the interlocks and door switches of the computer system. |
| 11 | MOTOR & SERVO EXC-C | Indicator light (red) | Indicates a blown fuze for phase C of the motor and servo excitation supply. |
| 12 | MOTOR & SERVO EXC-B | Indicator light (red) | Indicates a blown fuze for phase B of the motor and servo excitation supply. |
| 13 | MOTOR & SERVO EXC-A | Indicator light (red) | Indicates a blown fuze for phase A of the motor and servo excitation supply. |
| 14 | PLOT LIGHTS | Indicator light (red) | Indicates a blown fuze for the plotting board lights. |
| 15 | REGULATORS— −250V | Indicator light (red) | Indicates a blown fuze for the −250-volt regulator. |
| 16 | REGULATORS— +250V | Indicator light (red) | Indicates a blown fuze for the +250-volt regulator. |
| 17 | REGULATORS— −200V B | Indicator light (red) | Indicates a blown fuze for the −200-volt B regulator. |
| 18 | REGULATORS— −200V A | Indicator light (red) | Indicates a blown fuze for the −200-volt A regulator. |
| 19 | SERVO DC | Indicator light (white) | When illuminated, indicates that dc voltage has been applied to the computer servo circuits. |
| 20 | SERVO DC | Toggle switch | When placed in the ON position, applies dc voltage to the computer servo circuits. |
| 21 | VOLTS CHECK | Rotary switch (16-position). | Switches the VOLTS CHECK meter so that the amplitude of each low voltage supply in the computer may be observed. |
| 22 | PLATE VOLTS | Indicator light (white) | When illuminated, indicates that plate voltage has been applied throughout the computer system. |
| 23 | PLATE VOLTS | Toggle switch | When placed in the ON position, applies plate voltage throughout the computer system. |
| 24 | INTLK READY | Indicator light (white) | When illuminated, indicates that the 20-second delay has expired and that the interlock-and-door-switch circuit is complete. |
| 25 | COMPUTER POWER | Toggle switch | When placed in the ON position, applies 3-phase voltage throughout the computer system. |
| 26 | COMPUTER POWER ON | Indicator light (white) | When illuminated, indicates that each phase of the 3-phase supply is energized. |

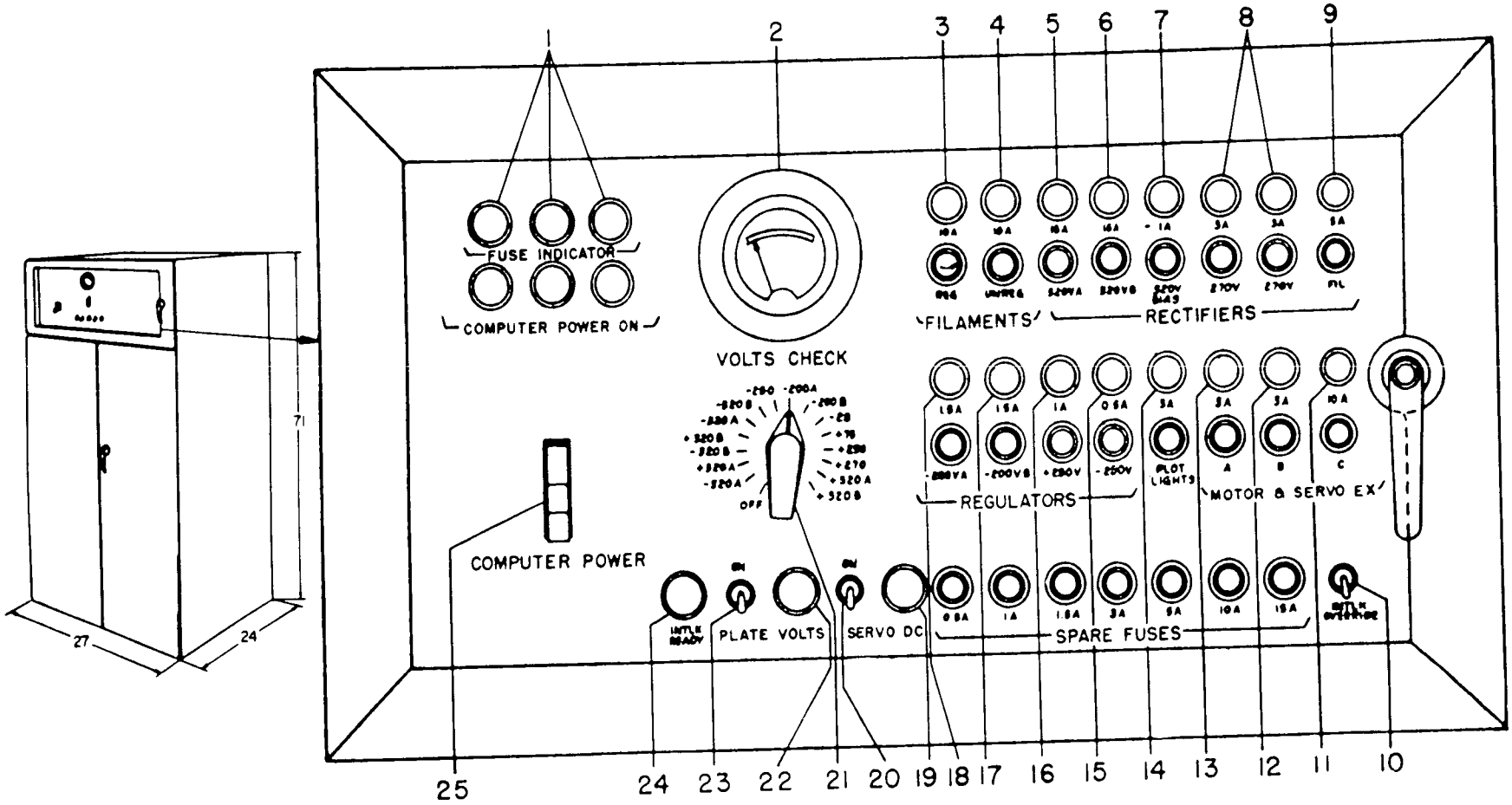


*Figure 15. Computer power cabinet.*

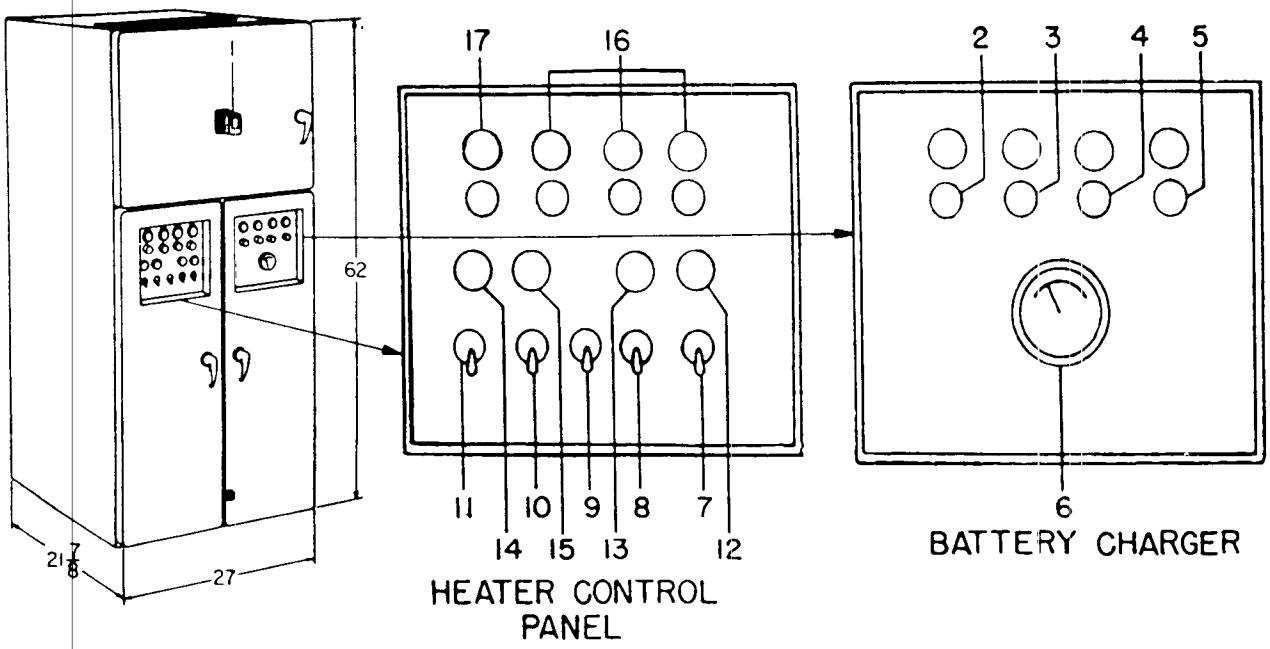


*Figure 16. Heating and ventilating cabinet assembly.*

c. *Heating and Ventilating Cabinet Assembly.* This assembly is located at the approximate center of the right (curbside) wall of the battery control trailer. It contains a personnel heater and ventilating system, storage batteries, and a battery charger. The batteries are used to power the switchboard, the alert siren, and the personnel heater, and provide emergency power for lighting and personnel ventilation. Figure 16 and table XII show the controls and indicators for the heating and ventilating cabinet assembly.

*Table XII. Heating and Ventilating Cabinet Assembly*

| Item | Title | Type | Function |
|---|---|---|---|
| 1 | TEMPERATURE CONTROL. | Thermostat | Indicates the trailer temperature and permits the temperature level to be set. |
| 2 | HEATER | Indicator light (red) | Indicates a blown fuze for the heater circuit. |
| 3 | EMERGENCY-BLOWER | Indicator light (red) | Indicates a blown fuze for the emergency blower circuit. |
| 4 | EMERGENCY-LIGHTS | Indicator light (red) | Indicates a blown fuze for the emergency lights circuits. |
| 5 | BATTERY CHARGER | Indicator light (red) | Indicates a blown fuze for the battery charger circuit. |
| 6 | AMMETER | Meter | Indicates whether the battery circuits are charging or discharging. |
| 7 | PRIME | Toggle switch | When placed in the ON position, energizes the prime circuit. |
| 8 | HEATER | Toggle switch | Determines whether the heater is being started or operated. |
| 9 | OUTPUT | Toggle switch | Determines whether a high or low output is designated. |
| 10 | NORMAL VENT BLOWER | Toggle switch | When placed in the ON position, energizes the normal ventilation blower motor. |
| 11 | EMERGENCY VENT BLOWER. | Toggle switch | When placed in the ON position, energizes the emergency ventilation blower motor. |
| 12 | PRIME | Indicator light (red) | When illuminated, indicates that the prime circuit is energized. |
| 13 | HEATER | Indicator light (white) | When illuminated, indicates that the heater circuit is energized. |

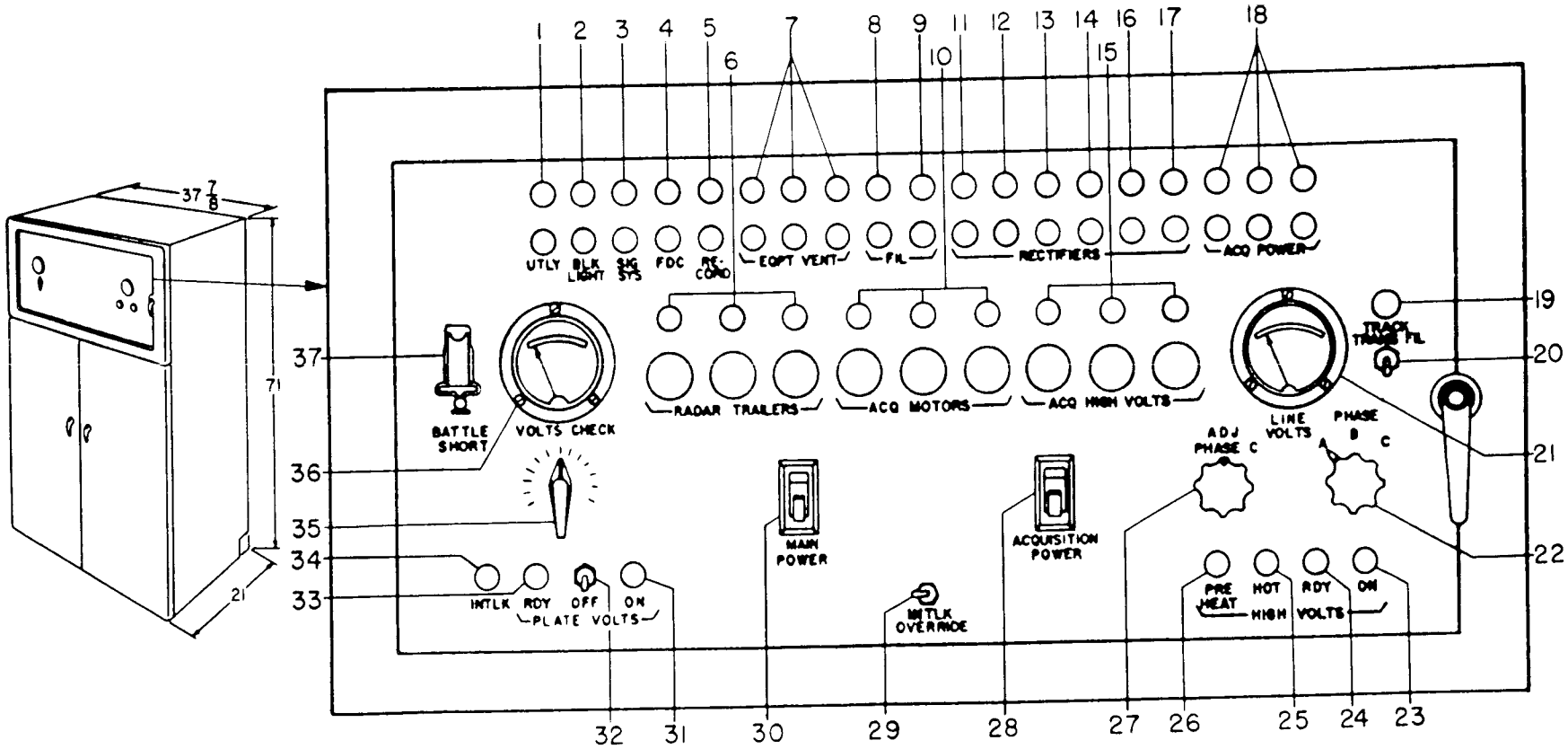


*Figure 17. Acquisition radar cabinet assembly*

*Table XII. Heating and Ventilating Cabinet Assembly*—Continued

| Item | Title | Type | Function |
|---|---|---|---|
| 14 | EMERGENCY VENT BLOWER | Indicator light (red) | When illuminated, indicates that the emergency ventilation blower circuit is energized. |
| 15 | NORMAL VENT | Indicator light (white) | When illuminated, indicates that the normal ventilation blower circuit is energized. |
| 16 | NORMAL VENT BLOWER | Indicator light (red) | Indicates a blown fuze for each phase of the 3-phase normal ventilation circuit. |
| 17 | COMBUSTION BLOWER | Indicator light (red) | Indicates a blown fuze for the combustion blower circuit. |
| 18 | BLOWER INTAKE DAMPER. | Damper (7-position) | When damper is in FRESH AIR position, the fresh air port is uncovered and the return air duct is closed. In the RECIRCULATE position, the fresh air port is closed and the return duct is open. Intermediate positions modulate the proportions of fresh and recirculated air delivered to the blower. |
| 19 | BLOWER DISCHARGE DAMPER. | Damper (2-position) | When damper is in the HEAT position, ventilating air is directed down through the air heater and is distributed through the floor duct. When switch is in the COOL position, the air is directed up and through the ceiling duct. |

*d. Acquisition Radar Cabinet Assembly.* This assembly is located to the right of the heating and ventilating cabinet assembly. It contains electronic components necessary for the operation of the acquisition radar and the acquisition power control panel. Figure 17 shows the acquisition radar cabinet assembly. Table XIII shows the controls and indicators on the acquisition power control panel.

*Table XIII. Acquisition Power Control Panel*

| Item | Title | Type | Function |
|---|---|---|---|
| 1 | UTILITY | Indicator light (red) | Indicates a blown fuze for the utility circuits. |
| 2 | BLK LIGHT | Indicator light (red) | Indicates a blown fuze for the blackout light circuit. |
| 3 | SIG SYS | Indicator light (red) | Indicates a blown fuze for the signaling system circuit. |
| 4 | FDC | Indicator light (red) | Indicates a blown fuze for the fire direction center circuit. |
| 5 | RECORD | Indicator light (red) | Indicates a blown fuze for the event recorder circuit. |
| 6 | RADAR TRAILER | Indicator light (red) | Indicates a blown fuze for each phase of the 3-phase supply for the radar trailer. |
| 7 | EQPT VENT | Indicator light (red) | Indicates a blown fuze for each phase of the 3-phase supply for the equipment ventilation circuit. Also indicates the equipment ventilation switch is in the OFF position. |
| 8 | FILAMENTS-ACQ | Indicator light (red) | Indicates a blown fuze for the battery control console filament circuit. |
| 9 | FILAMENTS-CONSOLE | Indicator light (red) | Indicates a blown fuze for the battery control-console filament circuit. |
| 10 | ACQ MOTORS | Indicator light (red) | Indicates a blown fuze for each phase of the 3-phase power supply for the acquisition radar motors. |
| 11 | RECTIFIERS-FIL | Indicator light (red) | Indicates a blown fuze for the rectifier filament circuit. |
| 12 | RECTIFIERS-BIAS | Indicator light (red) | Indicates a blown fuze for the rectifier bias supply. |
| 13 | RECTIFIERS— −320V | Indicator light (red) | Indicates a blown fuze for the −320-volt supply. |
| 14 | RECTIFIERS— +320V | Indicator light (red) | Indicates a blown fuze for the +320-volt supply. |
| 15 | ACQ HIGH VOLTS | Indicator light (red) | Indicates a blown fuze for each phase of the 3-phase acquisition high voltage supply. |
| 16 | RECTIFIERS— +270V | Indicator light (red) | Indicates a blown fuze for the +270-volt supply. |
| 17 | RECTIFIERS—IND HV | Indicator light (red) | Indicates a blown fuze for the indicator high voltage supply. |

*Table XIII. Acquisition Power Control Panel*—Continued

| Item | Title | Type | Function |
|---|---|---|---|
| 18 | ACQ POWER | Indicator light (red) | Indicates a blown fuze for each phase of the 3-phase supply for the acquisition power circuit. |
| 19 | TRACK TRANSMITTER FILAMENTS. | Indicator light (red) | When illuminated, indicates that the track transmitter filaments are energized. |
| 20 | TRACK TRANSMITTER FILAMENTS. | Toggle switch | When placed in the ON position, energizes the track transmitter filaments. |
| 21 | LINE VOLTS | Meter | Indicates the magnitude of each phase of the 3-phase line voltage as determined by the position of the PHASE switch. |
| 22 | PHASE | Rotary switch (3-position). | Determines which phase magnitude will be indicated on the LINE VOLTS meter. |
| 23 | HIGH VOLTS—ON | Indicator light (red) | When illuminated, indicates that the acquisition high voltage power supply is energized. |
| 24 | HIGH VOLTS—READY | Indicator light (green) | When illuminated, indicates that the acquisition high voltage power supply is ready to be energized. |
| 25 | HIGH VOLTS—HOT | Indicator light (amber) | When illuminated, indicates that the acquisition system filaments have become heated. |
| 26 | HIGH VOLTS—PREHEAT | Indicator light (white) | When illuminated, indicates that the acquisition system filaments are energized. |
| 27 | ADJUST PHASE C | Control knob | Adjusts the magnitude of phase C of the line voltage. |
| 28 | ACQUISITION POWER | Toggle switch | When placed in the ON position, supplies 3-phase power to the rectifier filaments, rectifier bias, acquisition filaments, battery control console filaments, acquisition motors, and acquisition antenna. |
| 29 | INTLK OVERRIDE | Toggle switch | When placed in the ON position, permits operation of the acquisition system with the interlock system broken. |
| 30 | MAIN POWER | Toggle switch | When placed in the ON position, applies 3-phase power to the computer circuits, radar control trailer, heating and ventilating cabinet in the radar control trailer, equipment ventilation, utility circuits, blackout lights, fire direction center equipment, signaling system circuits, and event recorder. |
| 31 | PLATE VOLTS—ON | Indicator light (white) | When illuminated, indicates that plate voltage has been applied to the acquisition system. |
| 32 | PLATE VOLTS—ON-OFF | Toggle switch | When placed in the ON position, applies plate voltage to the acquisition system. |
| 33 | PLATE VOLTS—READY | Indicator light (amber) | When illuminated, indicates that the plate voltage is ready to be applied to the acquisition system. |
| 34 | INTLK | Indicator light (blue) | When illuminated, indicates that the acquisition interlock circuit is complete. |
| 35 | VOLTS CHECK | Rotary switch (11-position). | Switches the VOLTS CHECK meter so that the amplitude of each acquisition low voltage supply may be checked. |
| 36 | VOLTS CHECK | Meter | Indicates the amplitude of the acquisition low voltage supply as determined by the VOLTS CHECK rotary switch. |
| 37 | BATTLESHORT | Toggle switch (with protector). | Shorts out the delay timers and the interlock circuit of the acquisition system and the computer. |

*e. Battery Control Trailer Junction Boxes.* The battery control junction box is mounted on the front portion of the roadside wall of the battery control trailer. It connects the battery control trailer electrically with other parts of the Nike system. Figure 18 shows the battery control junction box. The acquisition radar junction box, on the curbside of the trailer, connects the acquisition barbette and power source with the battery control trailer.

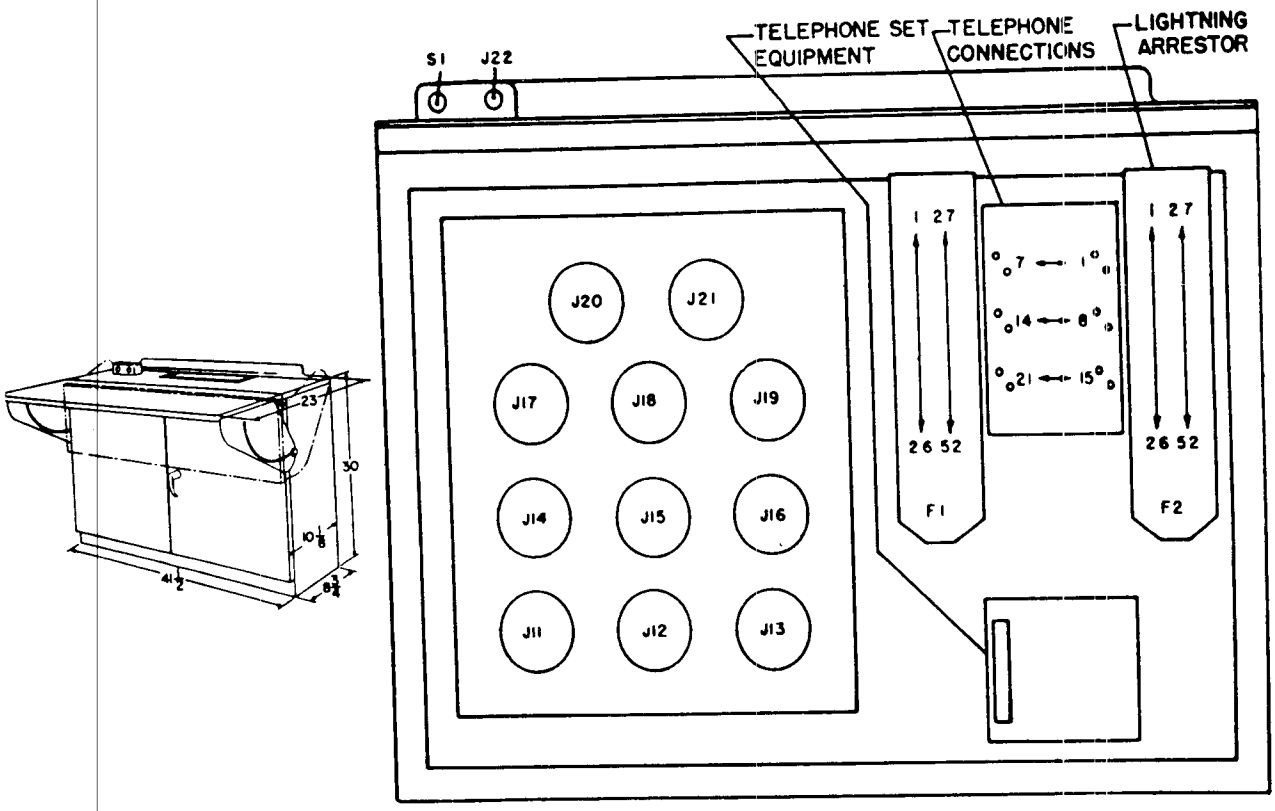


FRONT ELEVATION
TERMINAL STRIP AREA AND DOORS REMOVED

*Figure 18. Battery control junction box.*

*f. Early Warning Plotting Board* (fig. 19). This plotting board, mounted on the roadside wall above the battery control junction box, provides facilities for manually plotting early warning information. China marking pencils are used for plotting.

*g. Equipment-Cooling Cabinet Assembly* (fig. 20). This assembly is located at the extreme right and against the curbside wall of the battery control trailer. Its function is to prevent overheating of the vacuum tubes and other circuit components in the battery control trailer.

*h. Utility Cabinet Assembly* (fig. 21). This assembly is mounted on top of the equipment-cooling cabinet assembly. The utility cabinet assembly provides a convenient place for storing non-built-in test equipment and other material.

*i. Event Recorder and Switchboard Cabinet Assembly.* This assembly is located to the right of the battery control console assembly and against the curbside wall. The event recorder automatically records certain events prior to and after the firing of a round until the missile is detonated. The battery control switchboard is the terminus for all communications lines coming into and leaving the battery control trailer. Figure 22 shows the entire assembly. Figure 23 and table XIV show the controls and indicators on the event recorder subassembly panel.

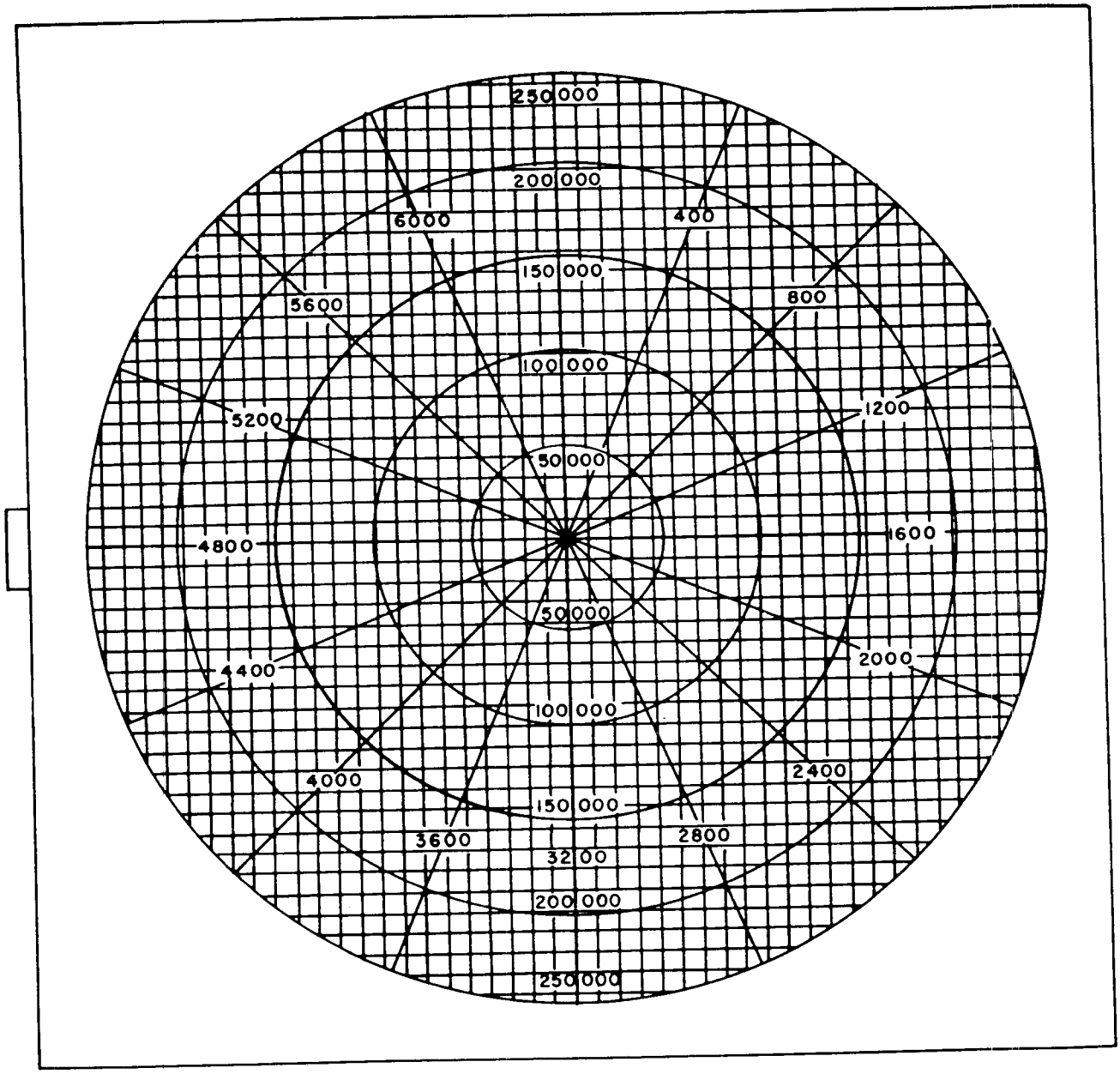


*Figure 19. Early warning plotting board.*

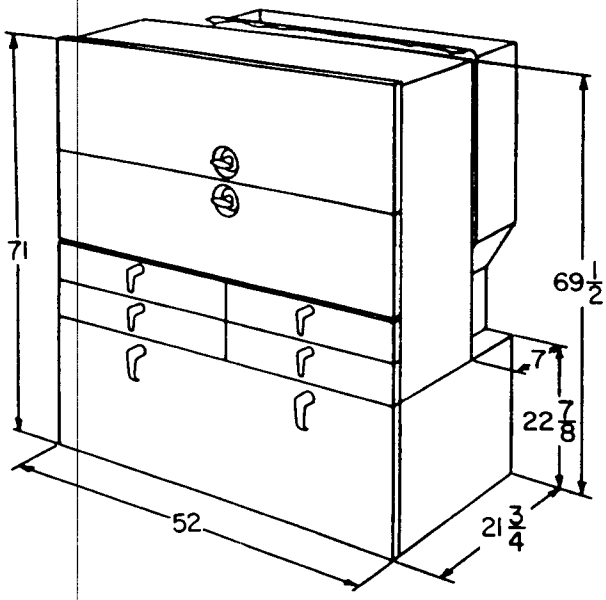


*Figure 20. Equipment cooling cabinet assembly.*

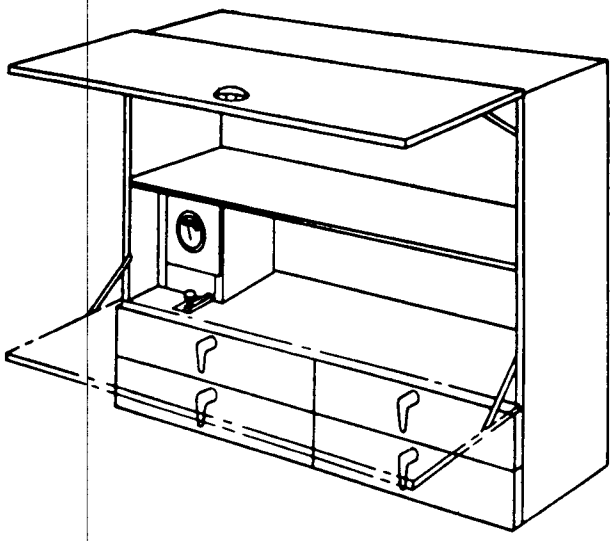

*Figure 21. Utility cabinet assembly.*

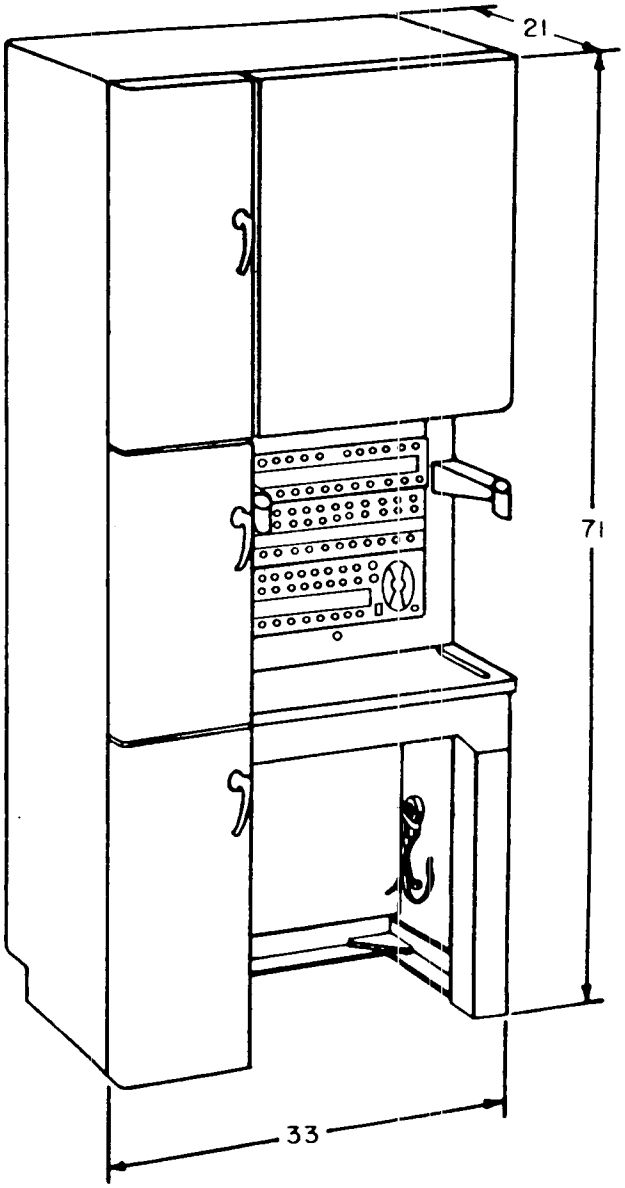


*Figure 22. Event recorder and switchboard cabinet assembly.*

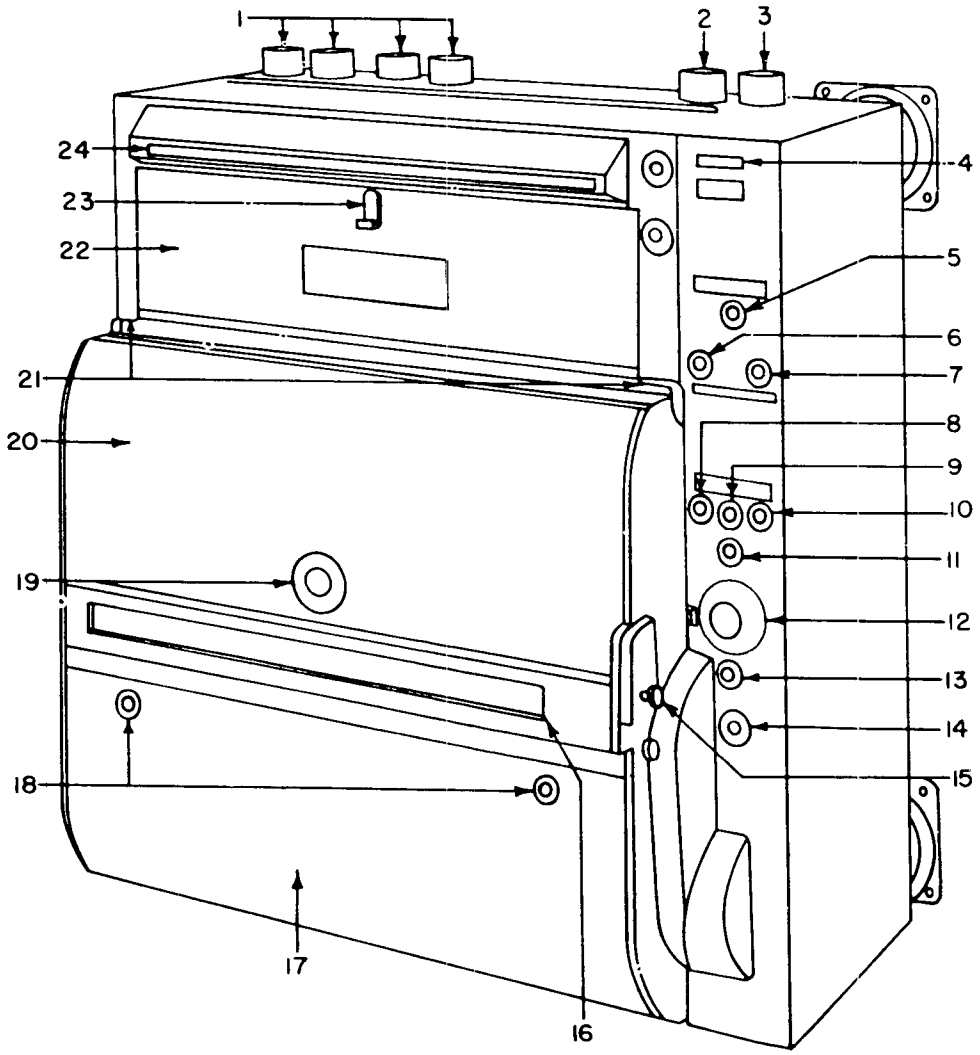


*Figure 23. Event recorder panel.*

*Table XIV. Event Recorder*

| Item | Title | Type | Function |
|---|---|---|---|
| 1 | SIGNAL INPUT RECEPTACLE. | Receptacle | Provides connections from external circuits to recording galvanometers. |
| 2 | REMOTE OPERATION RECEPTACLE. | Receptacle | Used for connecting external control circuits. |
| 3 | POWER RECEPTACLE | Receptacle | Used for connecting 28-volt dc and 120-volt ac 400-cycle power. |
| 4 | RECORD NUMBER | Register | Registers number of record recorded on chart. |
| 5 | GALVANOMETER ZERO | Pushbutton | When depressed, all signals are removed from the recording channels. This causes a zero mark to be recorded on the recording paper. |
| 6 | POWER 400-CYCLE | Indicator lamp (red) | When illuminated, indicates 120-volt 400-cycle power is applied to event recorder. |
| 7 | POWER DC | Indicator lamp (red) | When illuminated, indicates 28-volt dc power is applied to event recorder. |
| 8 | LAMP FAILURE—T | Indicator lamp (red) | When illuminated brightly, indicates timer unit lamp failure. |
| 9 | LAMP FAILURE—1 | Indicator lamp (red) | When illuminated brightly, indicates failure of galvanometer lamp No. 1 (not in old recorder when shipped). |
| 10 | LAMP FAILURE—2 | Indicator lamp | When illuminated brightly, indicates failure of galvanometer lamp No. 2. |

*Table XIV. Event Recorder*—Continued

| Item | Title | Type | Function |
|---|---|---|---|
| 11 | VIEW | Indicator lamp | Illuminates when VIEW-RECORD switch is in the VIEW position, and the TEST-OPERATE switch is in the TEST position, indicating a calibrating condition. |
| 12 | VIEW-RECORD | Rotary switch (2-position). | When placed in RECORD position, conditions aperture of camera to record signals. When placed in VIEW position, opens camera aperture to expedite the adjustment of the galvanometer traces. |
| 13 | MOTOR ON | Indicator lamp | When illuminated, indicates that chart drive motor is energized. |
| 14 | TEST-OPERATE | Toggle switch | TEST position applies −28-volt dc to control circuits illuminating LAMP FAILURE lamps provided VIEW-RECORD switch is in VIEW position. OPERATE position starts chart drive motor and energizes control circuits provided VIEW-RECORD switch is in RECORD position and battery control trailer is in RED alert status. |
| 15 | SHUTTER CONTROL | Knob | Control for opening shutter that provides access to calibrated adjustment screen. Interlocked so that shutter can be opened only when VIEW-RECORD switch is in VIEW position. |
| 16 | SHUTTER | Door | When shutter is opened, galvanometer traces appear on calibrated adjustment screen to expedite calibrating trace deflections on calibrated adjustment screen. |
| 17 | TAKEUP CASSETTE ACCESS. | Door | When opened, provides access to takeup cassettes. |
| 18 | TAKEUP DOOR RELEASE | Knob | When depressed, opens takeup cassette access door. |
| 19 | FOOTAGE COUNTER | Calibrated dial | Indicates number of feet of recording paper remaining, provided that correct setting was made initially of amount of recording chart on supply spool. |
| 20 | SUPPLY CASSETTE ACCESS. | Door | When opened, provides access to supply cassette. |
| 21 | CAMERA ASSEMBLY RELEASE. | Latch | When depressed, opens camera assembly. |
| 22 | GALVANOMETER BANK ACCESS DOOR. | Door | When opened, provides access to galvanometer bank access door. |
| 23 | GALVANOMETER DOOR RELEASE. | Knob | When operated, opens galvanometer bank access door. |
| 24 | DIRECT TRACE MONITORING SCREEN. | Visual indicator | Provides means for continuous visual monitoring of trace signals to indicate if all recording channels are operating. |

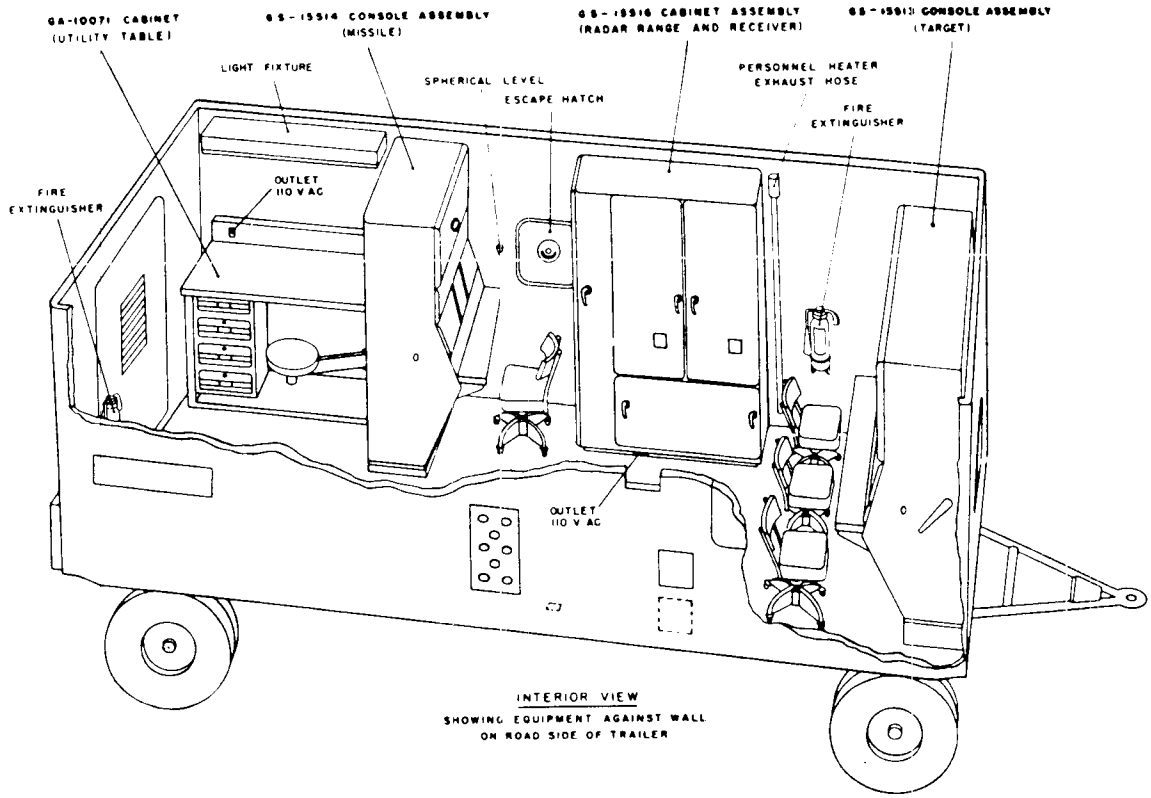


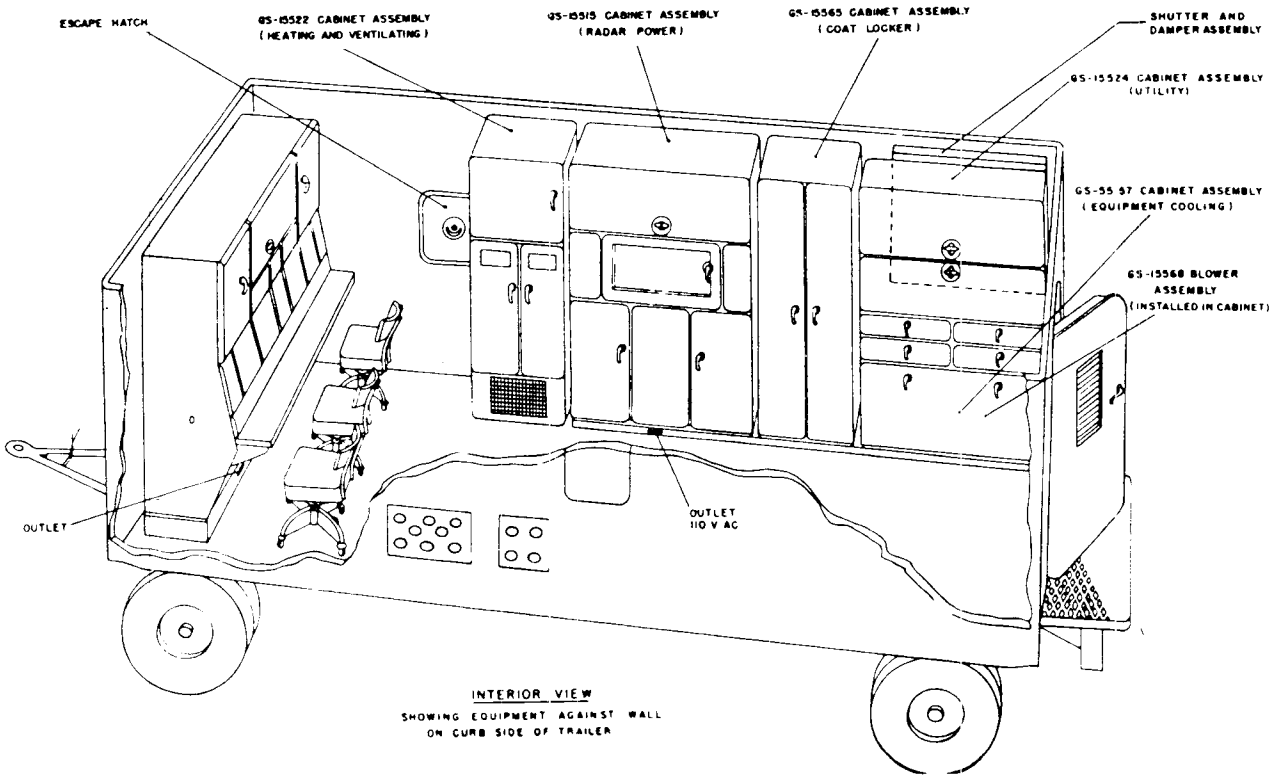


*Figure 24. Radar control trailer.*

## 17. Radar Control Trailer

*a. General* (fig. 24). The radar control trailer contains all of the missile-tracking and target-tracking radar electronic equipment except that contained in the missile- and target-tracking antenna assemblies on the drop-bed trailers. The missile- and target-tracking radar operators' indicators and controls are located in the radar control trailer. The components are contained in seven cabinet assemblies. Four of the cabinet assemblies—the target console assembly, the missile console assembly, the radar power cabinet assembly, and the radar range and receiver cabinet assembly—contain electronic components. The other three cabinet assemblies are the heating and ventilating cabinet assembly, the utility cabinet assembly, and the equipment-cooling cabinet assembly. A utility table (left rear) and a coat cabinet (toward the right rear) are included in the radar control trailer. A blower assembly is provided for use in connection with the equipment-cooling cabinet assembly to facilitate the cooling and ventilating requirements.

*b. Target Console Assembly.* This assembly is mounted against the front end of the trailer. It contains the indicators and controls for the three target-tracking radar operators. Figure 25 shows the target console assembly.

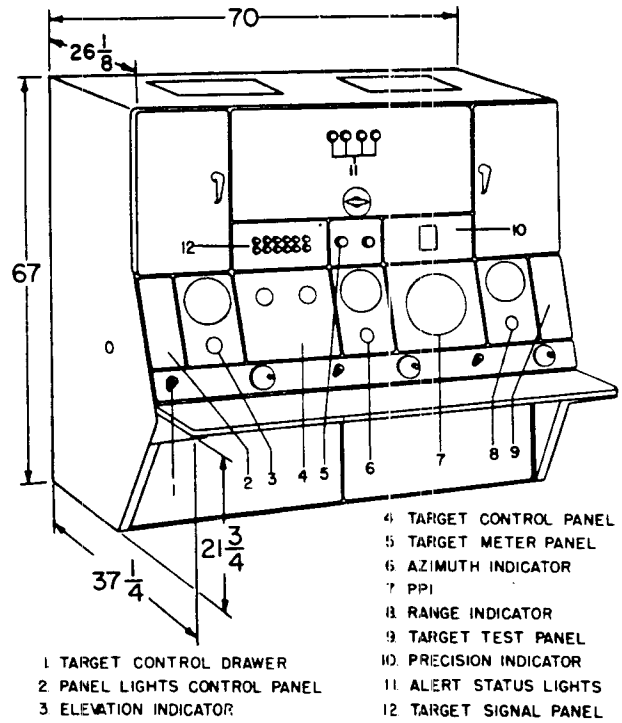


*Figure 25. Target console assembly.*

(1) Figure 26 and tables XV, XVI, and XVII show the indicators and controls on the panel lights control panel, the elevation indicator, and target control panel.

*Table XV. Panel Lights Control Panel*

| Item | Title | Type | Function |
|---|---|---|---|
| 1 | DIAL LIGHTS | Control knob | Adjusts the intensity of the dial lights on the target-track console. |
| 2 | SIGNAL LIGHTS | Control knob | Adjusts the intensity of the signal lights on the target-track console. |
| 3 | CEILING LIGHTS | Control knob | Adjusts the intensity of the radar control trailer ceiling lights if the BRIGHT-DIM switch is in the DIM position. |
| 4 | BRIGHT-DIM | Toggle switch | Determines whether the radar control trailer ceiling lights are at full intensity or if the intensity may be adjusted by the CEILING LIGHTS control knob. |

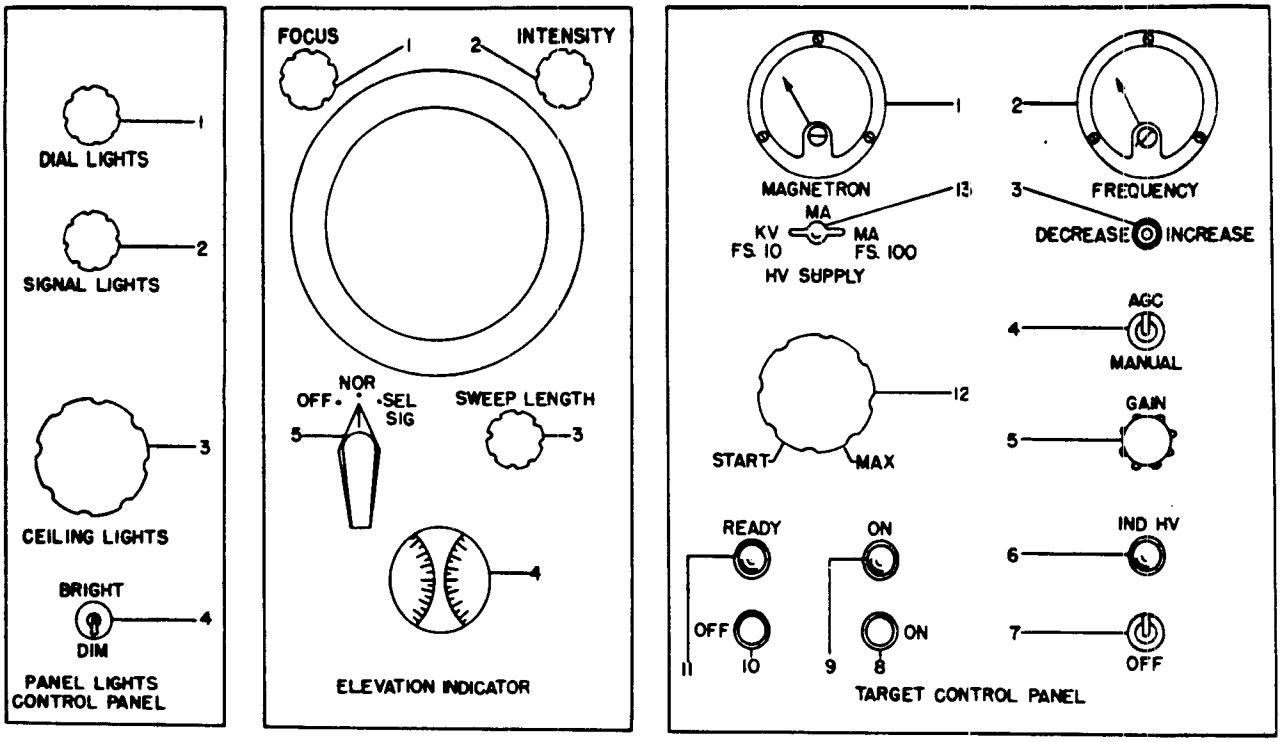


*Figure 26. Panel lights control panel, elevation indicator, and target control panel.*

*Table XVI. Elevation Indicator*

| Item | Title | Type | Function |
|---|---|---|---|
| 1 | FOCUS | Control knob | Adjusts the focus of the indicator presentation. |
| 2 | INTENSITY | Control knob | Adjusts the intensity of the indicator presentation. |
| 3 | SWEEP LENGTH | Control knob | Adjusts the sweep length of the indicator presentation. |
| 4 | ELEVATION | Dial | Indicates in mils the target elevation. |
| 5 | IMAGE SPACING | Rotary switch (3-position OFF, NOR, SEL SIG). | Determines the type of indicator presentation. |

*Table XVII. Target Control Panel*

| Item | Title | Type | Function |
|---|---|---|---|
| 1 | MAGNETRON-HV SUPPLY. | Meter | Indicates the amplitude of the target-tracking radar HV voltage and current, and the magnetron current. |
| 2 | FREQUENCY | Meter | Indicates in what part of the frequency band the target-tracking radar magnetron is operating. |
| 3 | FREQUENCY INCREASE DECREASE. | Toggle switch | Adjusts the magnetron frequency for target-tracking radar. |
| 4 | AGC-MANUAL | Toggle switch | Determines whether automatic gain control (AGC) or manual gain control will be used in the target-tracking radar receiver. |

*Table XVII. Target Control Panel*—Continued

| Item | Title | Type | Function |
|---|---|---|---|
| 5 | GAIN | Control knob | Adjusts the gain of the target-tracking radar receiver when the AGC-MANUAL switch is in the MANUAL position (radar in test condition). |
| 6 | IND HV | Indicator light (white) | When illuminated, indicates that the high voltage supply for the indicators at the target-tracking console is energized. |
| 7 | IND HV—OFF | Toggle switch | When placed in the OFF position, deenergizes the indicator high voltage power supply. |
| 8 | Target-track high voltage ON | Pushbutton | When depressed, energizes the target-tracking radar high voltage power supply. |
| 9 | Target-track high voltage ON | Indicator light (red) | When illuminated, indicates that the target-tracking radar high voltage power supply is energized. |
| 10 | Target-track high voltage OFF | Pushbutton | When depressed, deenergizes the target-tracking radar high voltage power supply. |
| 11 | Target-track high voltage READY. | Indicator light (green) | When illuminated, indicates that the high voltage 5-minute time delay has expired, and that the high voltage interlock and door switch circuit is complete. |
| 12 | Target-track high voltage START-MAX. | Control knob | Adjusts the amplitude of the target-tracking radar high voltage (must be at START before high voltage can be applied and adjusted). |
| 13 | MAGNETRON-HV SUPPLY | Lever switch (3-position) | Its position determines the reading of the MAGNETRON–HV SUPPLY meter. |

(2) Figure 27 and tables XVIII, XIX, XX, and XXI show the indicators and controls on the azimuth indicator, the plan position indicator, range indicator, and target test panel.

*Table XVIII. Azimuth Indicator*

| Item | Title | Type | Function |
|---|---|---|---|
| 1 | FOCUS | Control knob | Adjusts the focus of the indicator presentation. |
| 2 | INTENSITY | Control knob | Adjusts the intensity of the indicator presentation. |
| 3 | SWEEP LENGTH | Control knob | Adjusts the sweep length of the indicator presentation. |
| 4 | Azimuth | Dial | Indicates in mils the target azimuth. |
| 5 | IMAGE SPACING | Rotary switch (3-position, OFF, NOR, SEL SIG). | Determines the type of indicator presentation. |

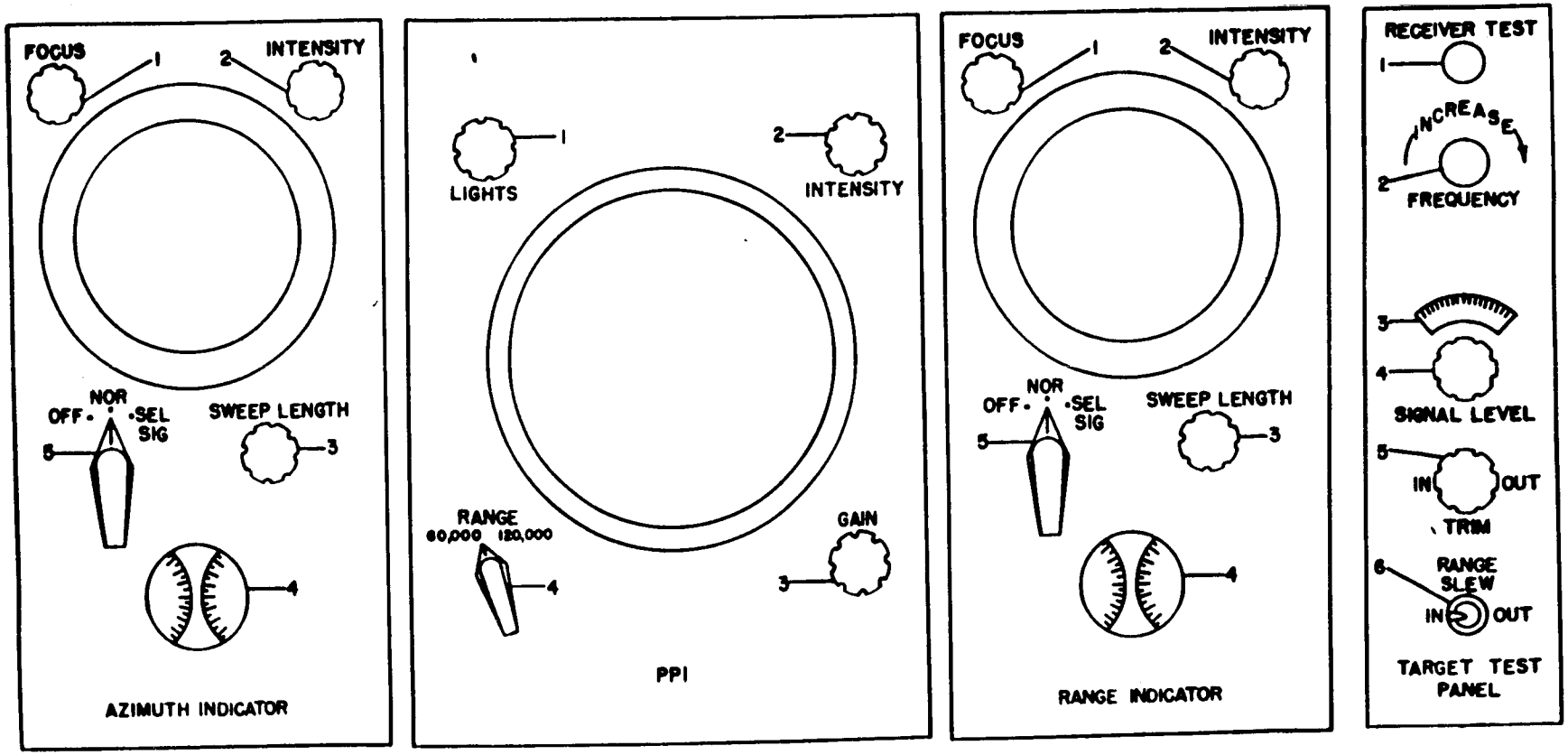


*Figure 27. Azimuth indicator, PPI, range indicator and target test panel.*

*Table XIX. Plan Position Indicator*

| Item | Title | Type | Function |
|---|---|---|---|
| 1 | LIGHTS | Control knob | Adjusts the illumination of the dial surrounding the circumference of the PPI face. |
| 2 | INTENSITY | Control knob | Adjusts the intensity of the PPI sweep. |
| 3 | GAIN | Control knob | Adjusts the gain of the PPI. |
| 4 | RANGE | Rotary switch (2-position). | Determines the range presented on the PPI. |

*Table XX. Range Indicator*

| Item | Title | Type | Function |
|---|---|---|---|
| 1 | FOCUS | Control knob | Adjusts the focus of the indicator presentation. |
| 2 | INTENSITY | Control knob | Adjusts the intensity of the indicator presentation. |
| 3 | SWEEP LENGTH | Control knob | Adjusts the sweep length of the indicator presentation. |
| 4 | Range | Dial | Indicates in yards the target range on the track range indicator. |
| 5 | IMAGE SPACING | Rotary switch (3-position, OFF, NOR, SEL SIG). | Determines the type of indicator presentation. |

*Table XXI. Target Test Panel*

| Item | Title | Type | Function |
|---|---|---|---|
| 1 | RECEIVER TEST | Indicator light (red) | When illuminated, indicates that the TARGET-STANDBY-MISSILE switch on the missile equipment drawer is in the TARGET POSITION. |
| 2 | FREQUENCY | Control knob | Adjusts the transmitting frequency of the radar rf test set. |
| 3 | SIGNAL LEVEL | Dial | Indicates the setting of the S/N attenuator in the radar rf test set. |
| 4 | SIGNAL LEVEL | Control knob | Adjusts the setting of the S/N attenuator in the radar rf test set. |
| 5 | RANGE-TRIM | Control knob | Fine adjustment for the RANGE-SLEW switch. |
| 6 | RANGE-SLEW | Lever switch (3-position) | Adjusts the simulated range of the rf signal produced by the radar rf test set. |

(3) Figure 28 and tables XXII, XXIII, and XXIV show the indicators and controls on the target signal panel, the target meter panel, and the precision indicator.

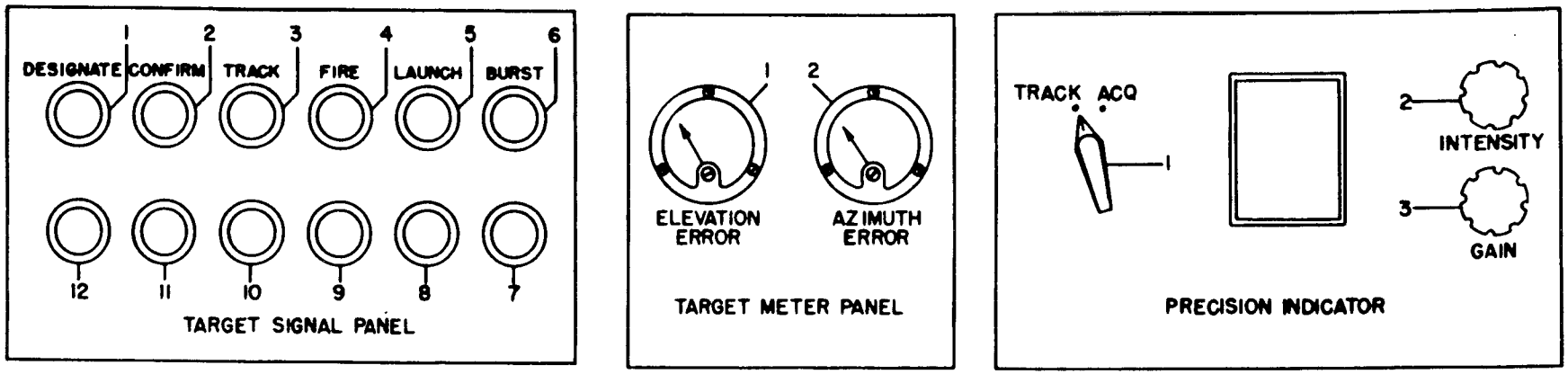


*Figure 28. Target signal panel, target meter panel, and precision indicator.*

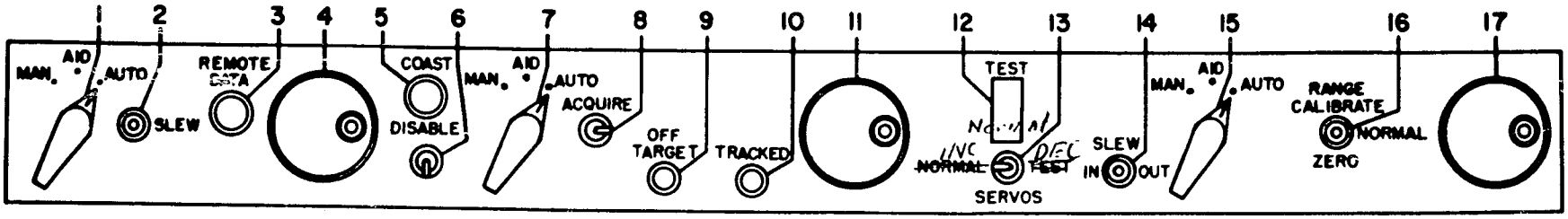


*Figure 29. Target control drawer.*

*Table XXII. Target Signal Panel*

| Item | Title | Type | Function |
|---|---|---|---|
| 1 | DESIGNATE | Indicator light (green) | When illuminated, indicates that a target has been designated by the battery control officer. |
| 2 | CONFIRM | Indicator light (green) | When illuminated, indicates that the designated target is being acquired by the target-tracking radar operators. |
| 3 | TRACK | Indicator light (green) | When illuminated, indicates that the designated target is being tracked. |
| 4 | FIRE | Indicator light (green) | When illuminated, indicates that the fire order has been initiated. |
| 5 | LAUNCH | Indicator light (green) | When illuminated, indicates that the missile has been launched. |
| 6 | BURST | Indicator light (green) | When illuminated, indicates that the burst order has been sent from the computer. |
| 7 | BURST | Indicator light (amber) | When illuminated, indicates that the burst order has not been sent from the computer. |
| 8 | LAUNCH | Indicator light (amber) | When illuminated, indicates that the missile has not been launched. |
| 9 | FIRE | Indicator light (amber) | When illuminated, indicates that the fire order has not been initiated. |
| 10 | TRACK | Indicator light (amber) | When illuminated, indicates that the designated target is not being tracked. |
| 11 | CONFIRM | Indicator light (amber) | When illuminated, indicates that the designated target has not been confirmed by the target-tracking radar operators. |
| 12 | DESIGNATE | Indicator light (amber) | When illuminated, indicates that a target has not been designated by the battery control officer. |

*Table XXIII. Target Meter Panel*

| Item | Title | Type | Function |
|---|---|---|---|
| 1 | ELEVATION ERROR | Meter | Indicates the magnitude and direction of the target elevation error voltage. |
| 2 | AZIMUTH ERROR | Meter | Indicates the magnitude and direction of the target azimuth error voltage. |

*Table XXIV. Precision Indicator*

| Item | Title | Type | Function |
|---|---|---|---|
| 1 | TRACK-ACQ | Rotary switch (2-position). | Not used: This switch is provided for use when the precision indicator is used as a component of the M33 antiaircraft fire control system. It is normally left in the TRACK position in the NIKE I system. |
| 2 | INTENSITY | Control knob | Adjusts the intensity of the precision indicator sweep. |
| 3 | GAIN | Control knob | Adjusts the gain of the precision indicator. |

(4) Figure 29 and table XXV show the indicators and controls on the target control drawer.

*Table XXV. Target Control Drawer*

| Item | Title | Type | Function |
|---|---|---|---|
| 1 | Elevation MAN-AID-AUTO | Rotary switch (3-position). | Determines the mode of operation for elevation tracking. |
| 2 | SLEW | Toggle switch | When operated to the up or down position, slews the target-tracking radar, in elevation, up or down. |
| 3 | REMOTE DATA | Indicator light (green) | When illuminated, indicates to the target-tracking radar elevation operator that remote data is being used. |
| 4 | Elevation tracking control | Handwheel | Provides manual or aided-manual tracking of the target in elevation. |
| 5 | COAST | Indicator light (red) | When illuminated, indicates that the target is not being tracked accurately in range. |
| 6 | DISABLE | Toggle switch | When placed in the DISABLE position, removes the coast circuit. |
| 7 | Azimuth MAN-AID-AUTO | Rotary switch (3-position). | Determines the mode of operation for azimuth tracking. |
| 8 | ACQUIRE | Toggle switch | When depressed, slews the target-tracking radar in range and azimuth to a locally designated target and in all three coordinates for a remotely designated target. |
| 9 | OFF TARGET | Pushbutton | When depressed, signals the battery control officer that the target-tracking radar operators have lost the target. |
| 10 | TRACKED | Pushbutton | When depressed, signals the battery control officer that the target is being tracked in all three coordinates. |
| 11 | Azimuth tracking control | Handwheel | Provides manual or aided-manual tracking of the target in azimuth. |
| 12 | TEST | Toggle switch (with protector). | When placed in the TEST position, places the target-tracking radar in the test condition. |
| 13 | SERVOS — DEC-NORMAL INC | Toggle switch | Used in testing the operation of the target-tracking radar azimuth and elevation positioning unit servos. |
| 14 | SLEW | Toggle switch | Slews the target-tracking radar-range circuits to the approximate desired range of a target or for test purposes. |
| 15 | Range MAN-AID-AUTO | Rotary switch (3-position). | Determines the mode of operation for range tracking. |
| 16 | RANGE CALIBRATE | Toggle switch | NORMAL position is used for normal operation; other two positions used for calibration and zeroing of the ranging circuits during testing. |
| 17 | Range tracking control | Handwheel | Provides manual or aided-manual tracking of the target in range. |

*c. Missile Console Assembly.* This assembly is mounted to the right of the utility table, and perpendicular to the roadside wall of the trailer. It contains the indicators and controls for the missile-tracking radar operator. Figure 30 shows the missile console assembly.

(1) Figure 31 and table XXVI show the indicators and controls on the missile control drawer.

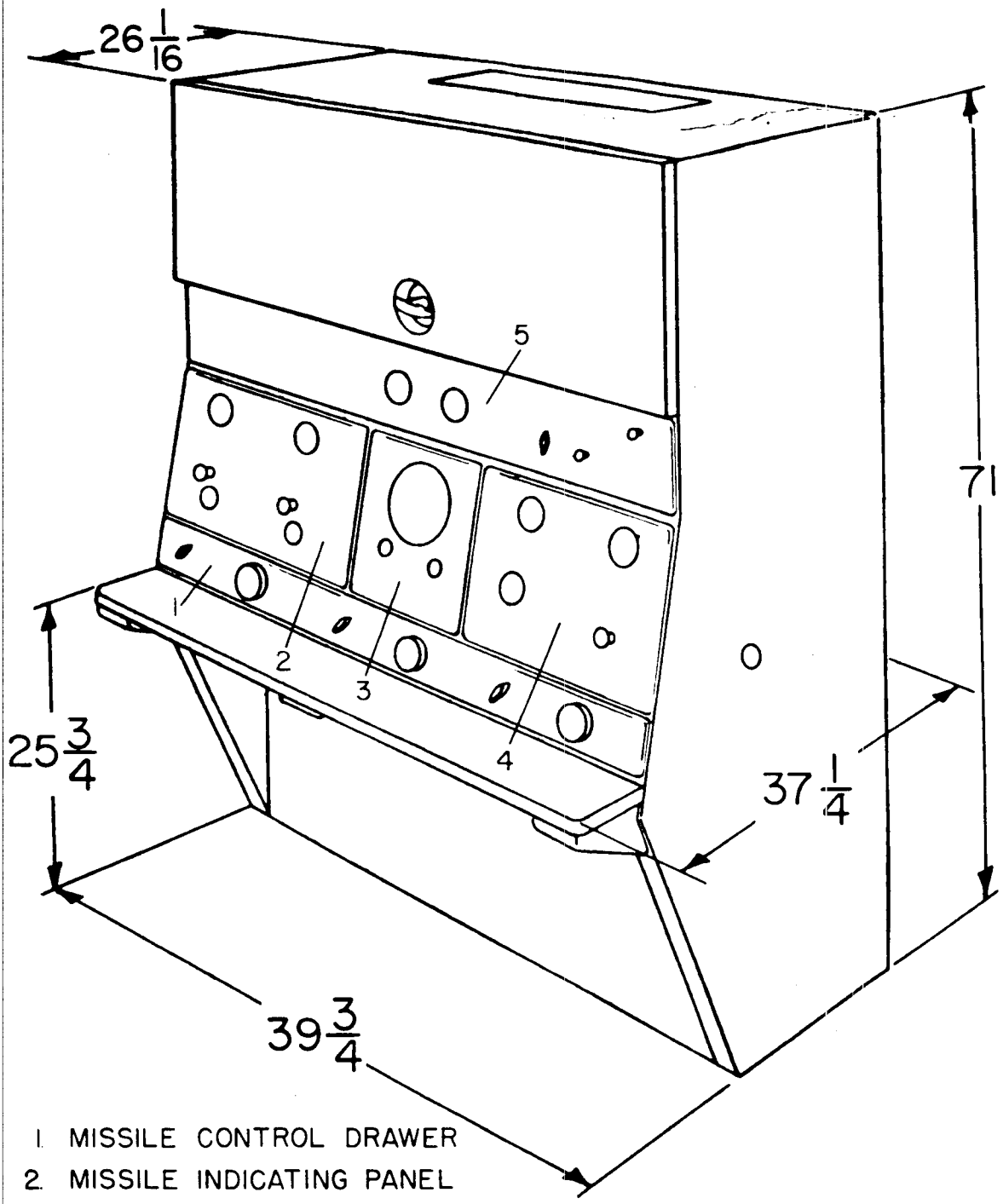


1. MISSILE CONTROL DRAWER
2. MISSILE INDICATING PANEL
3. RANGE INDICATOR
4. MISSILE CONTROL PANEL
5. MISSILE EQUIPMENT DRAWER

*Figure 30. Missile console assembly.*

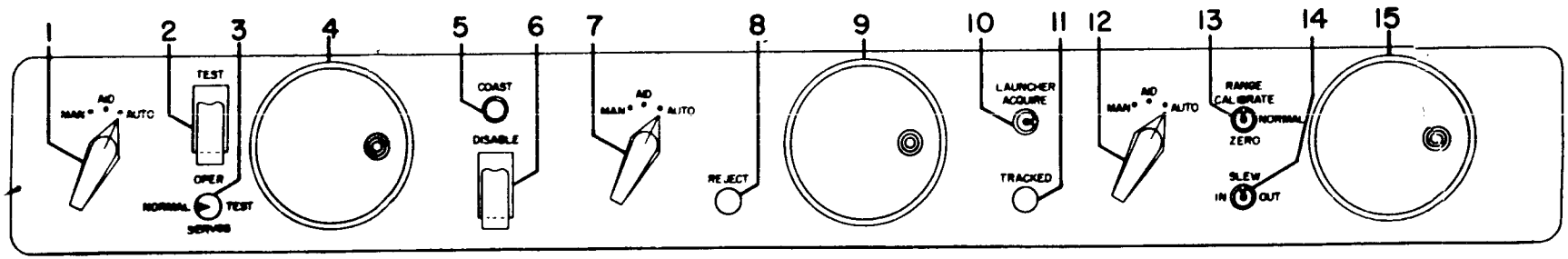


*Figure 31. Missile control drawer.*

*Table XXVI. Missile Control Drawer*

| Item | Title | Type | Function |
|---|---|---|---|
| 1 | Elevation MAN-AID-AUTO | Rotary switch (3-position) | Determines the mode of operation for elevation tracking when the missile-tracking radar is in the TEST condition. |
| 2 | TEST | Toggle switch (with protector). | When placed in the TEST position, the missile-tracking radar is in the TEST condition. |
| 3 | SERVOS—DEC-NORMAL-INC | Toggle switch | Used in testing the operation of the missile-tracking radar azimuth and elevation positioning unit servos. |
| 4 | Elevation tracking control | Handwheel | Provides manual tracking in elevation when the missile-tracking radar is in the TEST condition. |
| 5 | COAST | Indicator light (red) | When not illuminated, indicates that the missile is being tracked in the automatic mode. |
| 6 | DISABLE | Toggle switch (with protector). | When placed in the DISABLE position, removes the coast circuit. |
| 7 | Azimuth MAN-AID-AUTO | Rotary switch (3-position). | Determines the mode of operation for azimuth tracking when the missile-tracking radar is in the TEST condition. |
| 8 | REJECT | Pushbutton | When depressed, notifies the launching area that the designated missile does not meet firing requirements and is not to be fired. |
| 9 | Azimuth tracking control | Handwheel | Provides manual tracking in azimuth when the missile-tracking radar is in the TEST condition. |
| 10 | LAUNCHER ACQUIRE | Toggle switch | When operated and the system is in the test condition, the missile-tracking radar slews to a designated missile. |
| 11 | TRACKED | Pushbutton | When depressed, signals that the designated missile is being tracked. |
| 12 | Range MAN-AID-AUTO | Rotary switch (3-position). | Determines the mode of operation for range tracking when the missile-tracking radar is in the TEST condition. |
| 13 | RANGE | Toggle switch | NORMAL position is used for normal radar operation—other 2 positions used for calibration and zeroing of the ranging circuits during TEST condition. |
| 14 | SLEW | Toggle switch | Used only in TEST condition to slew the missile-tracking radar range circuits to the approximate desired range of a missile, the test responder, or the radar collimation mast. |
| 15 | Range tracking control | Handwheel | Provides manual tracking in range when the missile-tracking radar is in the TEST condition. |

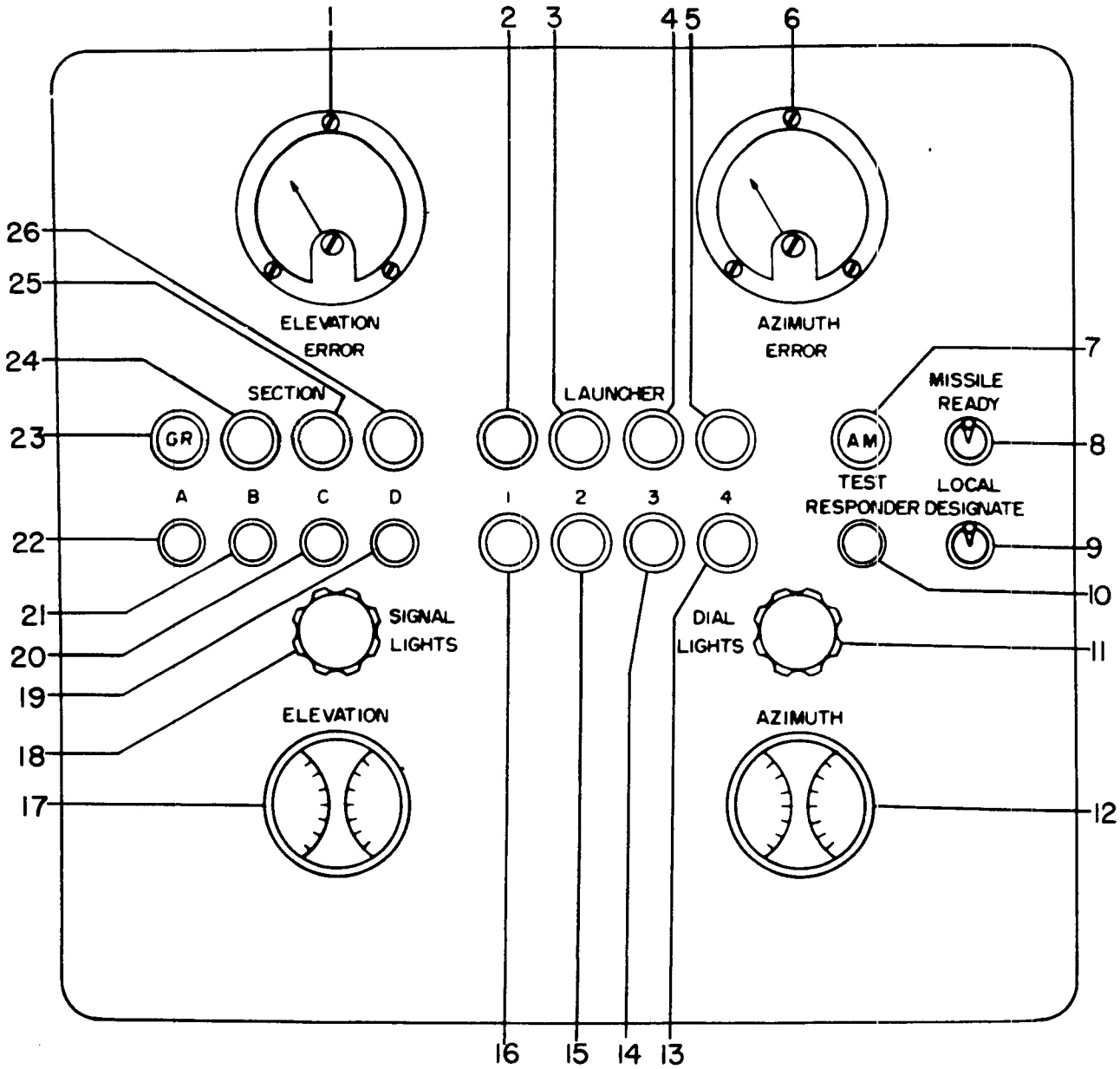


*Figure 32. Missile indicating panel.*

(2) Figure 32 and table XXVII show the indicators and controls on the missile indicating panel.

*Table XXVII. Missile Indicating Panel.*

| Item | Title | Type | Function |
|---|---|---|---|
| 1 | ELEVATION ERROR | Meter | Indicates the magnitude and direction of the missile elevation error voltage. |
| 2 | LAUNCHER-1 | Indicator light (green) | When illuminated, indicates that launcher number 1 has been designated. |
| 3 | LAUNCHER-2 | Indicator light (green) | When illuminated, indicates that launcher number 2 has been designated. |
| 4 | LAUNCHER-3 | Indicator light (green) | When illuminated, indicates that launcher number 3 has been designated. |

*Table XXVII. Missile Indicating Panel*—Continued

| Item | Title | Type | Function |
|---|---|---|---|
| 5 | LAUNCHER-4 | Indicator light (green) | When illuminated, indicates that launcher number 4 has been designated. |
| 6 | AZIMUTH ERROR | Meter | Indicates the direction and magnitude of the missile azimuth error voltage. |
| 7 | TEST RESPONDER | Indicator light (amber) | When illuminated, indicates that the test responder is being used rather than any launcher. |
| 8 | MISSILE READY | Toggle switch | When operated, signals that the missile is ready for firing when in local operation. |
| 9 | LOCAL-DESIGNATE | Toggle switch | When operated, permits local designation of a launcher at the missile-tracking radar. |
| 10 | TEST RESPONDER | Pushbutton | When depressed, designates the test responder from the missile-tracking radar. |
| 11 | DIAL LIGHTS | Control knob | Adjusts the intensity of the dial lights at the missile-tracking console. |
| 12 | AZIMUTH | Dial | Indicates the azimuth angle at which the missile-tracking radar antenna is pointing. |
| 13 | LAUNCHER-4 | Pushbutton | When depressed, signals that this is the launcher to be designated if LOCAL DESIGNATE toggle switch is in LOCAL DESIGNATE position. |
| 14 | LAUNCHER-3 | Pushbutton | When depressed, signals that this is the launcher to be designated if LOCAL DESIGNATE toggle switch is in LOCAL DESIGNATE position. |
| 15 | LAUNCHER-2 | Pushbutton | When depressed, signals that this is the launcher to be designated if LOCAL DESIGNATE toggle switch is in LOCAL DESIGNATE position. |
| 16 | LAUNCHER-1 | Pushbutton | When depressed, signals that this is the launcher to be designated if LOCAL DESIGNATE toggle switch is in LOCAL DESIGNATE position. |
| 17 | ELEVATION | Dial | Indicates the elevation angle at which the missile radar antenna is pointing. |
| 18 | SIGNAL LIGHTS | Control knob | Adjusts the intensity of the signal lights on the missile track console. |
| 19 | SECTION-D | Pushbutton | When depressed, signals that this is the launcher section to be selected if LOCAL DESIGNATE toggle switch is in LOCAL DESIGNATE position. |
| 20 | SECTION-C | Pushbutton | When depressed, signals that this is the launcher section to be selected if LOCAL DESIGNATE toggle switch is in LOCAL DESIGNATE position. |
| 21 | SECTION-B | Pushbutton | When depressed, signals that this is the launcher section to be selected if LOCAL DESIGNATE toggle switch is in LOCAL DESIGNATE position. |
| 22 | SECTION-A | Pushbutton | When depressed, signals that this is the launcher section to be selected if LOCAL DESIGNATE toggle switch is in LOCAL DESIGNATE position. |
| 23 | SECTION-A | Indicator light (green) | When illuminated, indicates that this is the launcher section selected. |
| 24 | SECTION-B | Indicator light (green) | When illuminated, indicates that this is the launcher section selected. |
| 25 | SECTION-C | Indicator light (green) | When illuminated, indicates that this is the launcher section selected. |
| 26 | SECTION-D | Indicator light (green) | When illuminated, indicates that this is the launcher section selected. |

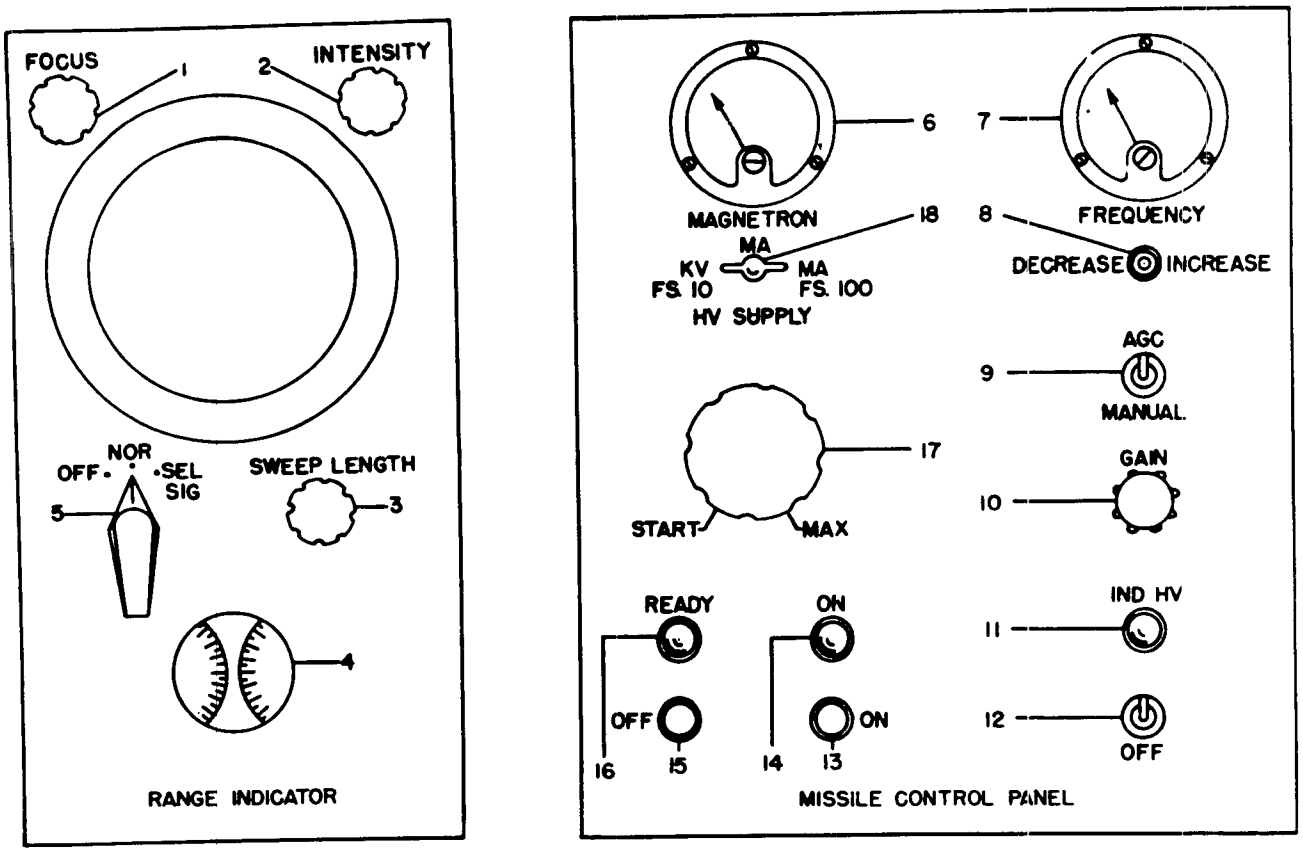


*Figure 33. Range indicator and missile control panel.*

(3) Figure 33 and table XXVIII show the indicators and controls on the range indicator and the missile control panel.

*Table XXVIII. Range Indicator and Missile Control Panel*

| Item | Title | Type | Function |
|---|---|---|---|
| 1 | FOCUS | Control knob | Adjusts the focus of the range indicator. |
| 2 | INTENSITY | Control knob | Adjusts the intensity of the range indicator. |
| 3 | SWEEP LENGTH | Control knob | Adjusts the sweep length of the range indicator. |
| 4 | Range | Dial | Indicates, in yards, the missile range. |
| 5 | Image spacing | Rotary switch (3-position; OFF, NOR, SEL SIG). | Determines the type of indicator presentation. |
| 6 | MAGNETRON-HV SUPPLY. | Meter | Indicates the amplitude of the missile-tracking radar HV voltage and current and the magnetron current. |
| 7 | FREQUENCY | Meter | Indicates in what part of the frequency band the missile-tracking radar magnetron is operating. |
| 8 | FREQUENCY-INCREASE DECREASE. | Toggle switch | Adjusts the frequency of the missile-tracking radar magnetron. |
| 9 | AGC-MANUAL | Toggle switch | Determines whether automatic gain control will be used or manual operation will be used in the missile-tracking radar receiver; manual gain used only in the TEST condition. |
| 10 | GAIN | Control knob | Adjusts the gain of the missile-tracking radar receiver when the AGC-MANUAL switch is in the MANUAL position and the TEST condition prevails. |

*Table XXVIII. Range Indicator and Missile Control Panel*—Continued

| Item | Title | Type | Function |
|---|---|---|---|
| 11 | IND HV | Indicator light (white) | When illuminated, indicates that the indicator high voltage supply for the indicator at the missile console is energized. |
| 12 | IND HV-OFF | Toggle switch | When placed in the OFF position, de-energizes the indicator high voltage power supply. |
| 13 | Missile track high voltage ON | Pushbutton | When depressed, energizes the missile-tracking radar high voltage power supply. |
| 14 | Missile track high voltage ON | Indicator light (red) | When illuminated, indicates that the missile-tracking radar high voltage power supply is energized. |
| 15 | Missile track high voltage OFF | Pushbutton | When depressed, deenergizes the missile-tracking radar high voltage power supply. |
| 16 | Missile track high voltage READY. | Indicator light (green) | When illuminated, indicates that the high voltage 5-minute delay time has expired and that the high voltage interlock and doorswitch circuit is complete. |
| 17 | Missile track high voltage START-MAX. | Control knob | Adjusts the amplitude of the missile track high voltage. Must be in the START position before high voltage can be applied and adjusted. |
| 18 | MAGNETRON-HV SUPPLY. | Lever switch | Determines the reading of the MAGNETRON-HV SUPPLY meter. |

(4) Figure 34 and table XXIX show the indicators and controls on the missile equipment drawer.

*Table XXIX. Missile Equipment Drawer*

| Item | Title | Type | Function |
|---|---|---|---|
| 1 | DESIGNATED | Indicator light (green) | When illuminated, indicates that a missile has been designated. |
| 2 | READY | Indicator light (green) | When illuminated, indicates that a missile is ready to be fired. |
| 3 | TRACKED | Indicator light (green) | When illuminated, indicates that a missile is being tracked on the launcher. |
| 4 | FIRE | Indicator light (green) | When illuminated, indicates that the fire order has been initiated at the computer. |
| 5 | LAUNCH | Indicator light (green) | When illuminated, indicates that the missile has been launched. |
| 6 | BURST | Indicator light (green) | When illuminated, indicates that the burst order has been initiated at the computer. |
| 7 | TRANSMITTER ERROR | Meter | Indicates the percentage of missing pulses from the missile-tracking radar transmitter. |
| 8 | RECEIVED SIGNAL | Meter | Indicates the mganitude of the missile-tracking radar receiver AGC-voltage. |
| 9 | RECEIVER TEST | Indicator light (red) | When illuminated, indicates that the TARGET-STANDBY-MISSILE switch is in the MISSILE position. |
| 10 | RANGE-TRIM | Control knob | Fine adjustment for the RANGE-SLEW switch. |
| 11 | RANGE-SLEW | Lever switch (3-position) | Adjusts the simulated range of the rf signal produced by the radar rf test set. |
| 12 | SIGNAL LEVEL | Dial | Indicates the setting of the S/N attenuator in the radar rf test set. |
| 13 | SIGNAL LEVEL | Control knob | Adjusts the setting of the S/N attenuator in the radar rf test set. |
| 14 | TARGET-STANDBY-MISSILE. | Rotary switch (3-position). | Its position determines the operational use of the radar rf test set in TEST conditions. |
| 15 | BURST | Indicator light (amber) | When illuminated, indicates that the burst order has not been initiated at the computer. |

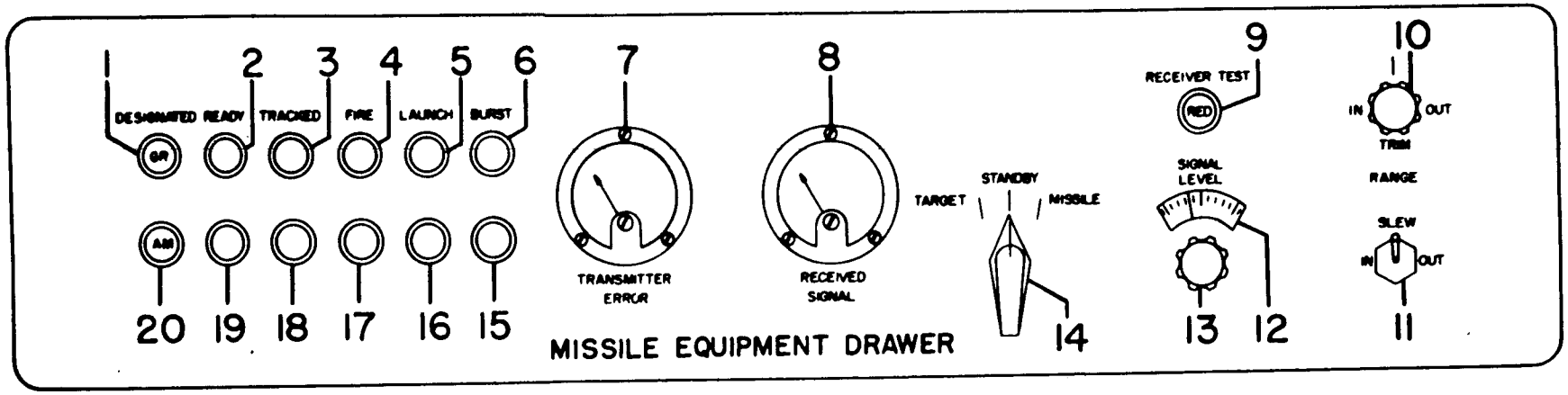


*Figure 34. Missile equipment drawer.*

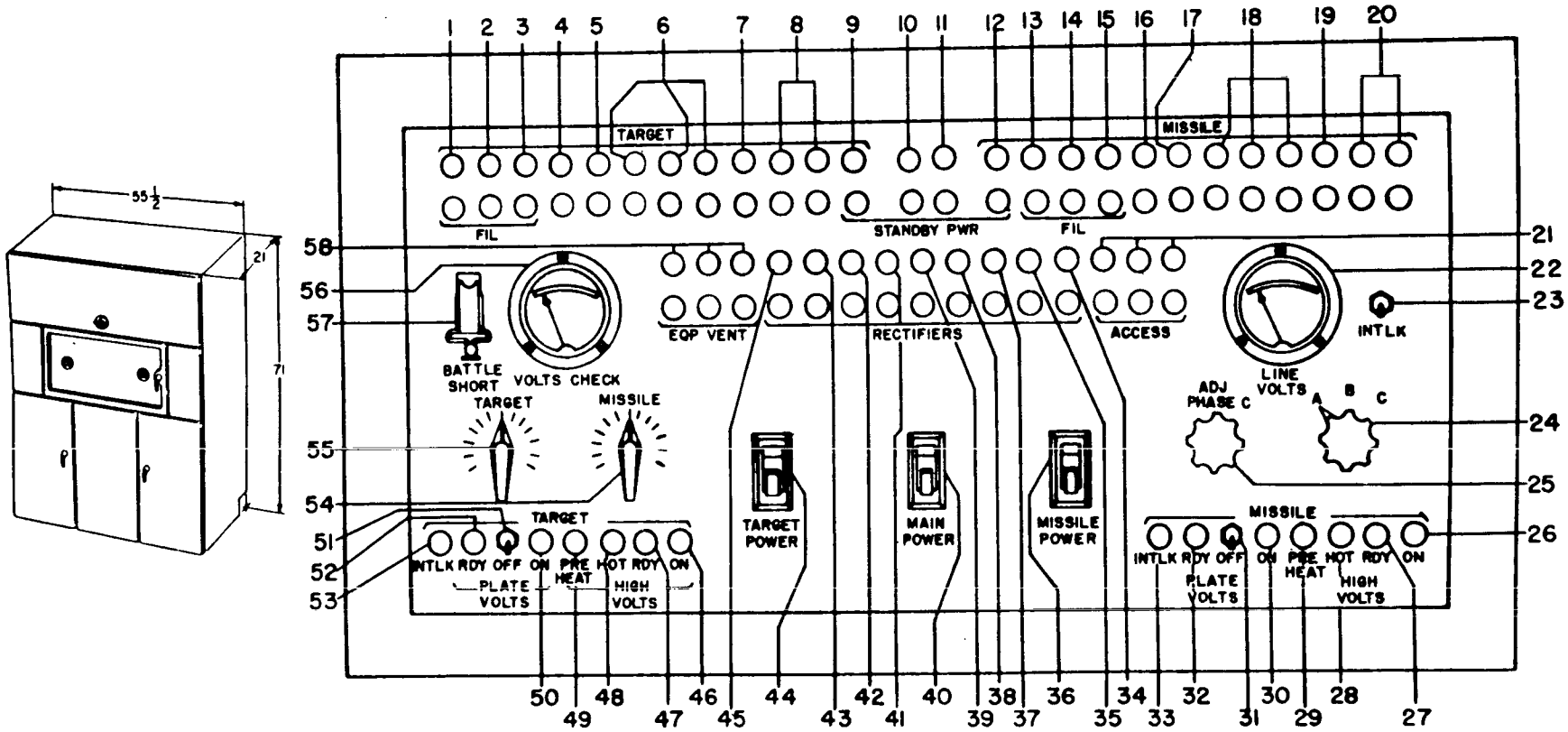


*Figure 35. Re[illegible]er cabinet assembly.*

*Table XXIX. Missile Equipment Drawer*—Continued

| Item | Title | Type | Function |
|---|---|---|---|
| 16 | LAUNCH | Indicator light (amber) | When illuminated, indicates that the missile has not been launched. |
| 17 | FIRE | Indicator light (amber) | When illuminated, indicates that the fire order has not been initiated at the computer. |
| 18 | TRACKED | Indicator light (amber) | When illuminated, indicates that the missile has not been automatically tracked by the missile-tracking radar. |
| 19 | READY | Indicator light (amber) | When illuminated, indicates that the missile is not ready to be fired. |
| 20 | DESIGNATED | Indicator light (amber) | When illuminated, indicates that a missile to be fired has not been designated. |

*d. Radar Power Cabinet Assembly.* This assembly is mounted on the center of the curbside wall of the trailer. It contains power supplies, the radar power control panel, and time delay components necessary for the operation of the traget-tracking and missile-tracking radars. Figure 35 shows the radar power cabinet assembly and the radar power control panel. Table XXX shows the controls and indicators on the radar power control panel.

*Table XXX. Radar Power Control Panel*

| Item | Title | Type | Function |
|---|---|---|---|
| 1 | TARGET-FILAMENTS-CONSOLE. | Indicator light (red) | Indicates a blown fuze for the target console filaments. |
| 2 | TARGET-FILAMENTS RNG-REC. | Indicator light (red) | Indicates a blown fuze for the target circuit filaments in the radar range receiver cabinet. |
| 3 | TARGET-FILAMENTS-ANT. | Indicator light (red) | Indicates a blown fuze for the target antenna filaments. |
| 4 | TARGET-AZ MOTOR EXCITATION. | Indicator light (red) | Indicates a blown fuze for the target azimuth motor excitation supply voltage. |
| 5 | TARGET-MOTOR EXCITATION. | Indicator light (red) | Indicates a blown fuze for the target motor excitation supply voltage. |
| 6 | TARGET-SERVO | Indicator light (red) | Indicates a blown fuze for each phase of the 3-phase target servo supply voltage. |
| 7 | TARGET-IND HV | Indicator light (red) | Indicates a blown fuze for the target indicator high voltage supply. |
| 8 | TARGET-HIGH VOLTS | Indicator light (red) | Indicates a blown fuze for each phase of the 2-phase target high voltage supply. |
| 9 | TARGET-STANDBY POWER-FIL. | Indicator light (red) | Indicates a blown fuze for the target filaments energized in the standby power condition of operation. |
| 10 | STANDBY POWER-UTILITY. | Indicator light (red) | Indicates a blown fuze for the utility equipment energized in the standby power condition of operation. |
| 11 | STANDBY POWER-BLK LIGHT. | Indicator light (red) | Indicates a blown fuze for the blackout lights used in the standby power condition of operation. |
| 12 | MISSILE-STANDBY POWER-FIL. | Indicator light (red) | Indicates a blown fuze for the missile filaments energized in the standby power condition of operation. |
| 13 | MISSILE-FILAMENTS CONSOLE. | Indicator light (red) | Indicates a blown fuze for the missile radar console filaments. |
| 14 | MISSILE FILAMENTS-RNG REC. | Indicator light (red) | Indicates a blown fuze for the missile circuit filaments in the radar range and receiver cabinet. |
| 15 | MISSILE-FILAMENTS-ANT. | Indicator light (red) | Indicates a blown fuze for the missile radar antenna filaments. |
| 16 | MISSILE-AZ MOTOR | Indicator light (red) | Indicates a blown fuze for the missile azimuth motor excitation supply voltage. |

*Table XXX. Radar Power Control Panel*—Continued

| Item | Title | Type | Function |
|---|---|---|---|
| 17 | MISSILE-MOTOR EXCITATION. | Indicator light (red) | Indicates a blown fuze for the missile radar motor excitation supply voltage. |
| 18 | MISSILE-SERVOS | Indicator light (red) | Indicates a blown fuze for each phase of the 3-phase target servo supply voltage. |
| 19 | MISSILE-IND HV | Indicator light (red) | Indicates a blown fuze for the missile radar indicator high voltage supply. |
| 20 | MISSILE-HIGH VOLTS | Indicator light (red) | Indicates a blown fuze for each phase of the 2-phase missile radar high voltage supply. |
| 21 | ACCESSORIES | Indicator light (red) | Indicates a blown fuze for each phase of the 3-phase supply for the accessories. |
| 22 | LINE VOLTS | Meter | Indicates the magnitude of each phase of the 3-phase line voltage as determined by the position of the PHASE switch. |
| 23 | INTLK OVERRIDE | Toggle switch | When placed in the ON position, removes the interlock circuit from the control system. |
| 24 | PHASE | Rotary switch (3-position). | Determines which phase magnitude will be indicated on the LINE VOLTS meter. |
| 25 | ADJUST PHASE C | Control knob | Adjusts the magnitude of phase C of the line voltage. |
| 26 | MISSILE-HIGH VOLTS-ON. | Indicator light (red) | Whem illuminated, indicates that the missile high voltage power supply has been energized. |
| 27 | MISSILE-HIGH VOLTS-READY. | Indicator light (green) | When illuminated indicates that the missile high voltage power supply is ready to be energized. |
| 28 | MISSILE-HIGH VOLTS-HOT. | Indicator light (amber) | When illuminated, indicates that the missile track system filaments have become heated. |
| 29 | MISSILE-HIGH VOLTS | Indicator light (white) | When illuminated, indicates that the filaments in the missile track system are energized. |
| 30 | MISSILE-PLATE VOLTS-ON. | Indicator light (red) | When illuminated, indicates that plate voltage has been applied to the missile track circuits. |
| 31 | MISSILE-PLATE VOLTS-OFF. | Toggle switch | When placed in the ON position, applies plate voltage (low voltage) to the missile track system. |
| 32 | MISSILE-PLATE VOLTS READY. | Indicator light (amber) | When illuminated, indicates that plate voltage may be applied to the low voltage rectifiers in the missile-tracking radar. |
| 33 | MISSILE-INTLK | Indicator light (blue) | When illuminated, indicates that the missile track interlock circuit is complete. |
| 34 | RECTIFIERS-+270V | Indicator light (red) | Indicates a blown fuze for the +270-volt supply. |
| 35 | RECTIFIERS-+450V | Indicator light (red) | Indicates a blown fuze for the +450-volt supply. |
| 36 | MISSILE POWER | Toggle switch | When placed in the ON position applies 3-phase power to the missile track system. |
| 37 | RECTIFIERS-+320V B | Indicator light (red) | Indicates a blown fuze for the +320-volt B supply. |
| 38 | RECTIFIERS--320V B | Indicator light (red) | Indicates a blown fuze for the −320-volt B supply. |
| 39 | RECTIFIERS-+320V A | Indicator light (red) | Indicates a blown fuze for the +320-volt A supply. |
| 40 | MAIN POWER | Toggle switch | When placed in the ON position, applies 3-phase power to the equipment ventilation, accessories, rectifier filaments and bias, and regulator filaments. |
| 41 | RECTIFIERS--320V A | Indicator light (red) | Indicates a blown fuze for the −320-volt A supply |
| 42 | RECTIFIERS-BIAS | Indicator light (red) | Indicates a blown fuze for the rectifier bias supply. |
| 43 | RECTIFIERS-REG | Indicator light (red) | Indicates a blown fuze for the regulator filament supply. |
| 44 | TARGET POWER | Toggle switch | When placed in the ON position, applies 3-phase power to the target track system. |
| 45 | RECTIFIER-FIL | Indicator light (red) | Indicates a blown fuze for the rectifier filament supply. |
| 46 | TARGET-HIGH VOLTS-ON | Indicator light (red) | When illuminated, indicates that the target radar high voltage power supply has been energized. |
| 47 | TARGET-HIGH VOLTS-READY. | Indicator light (green) | When illuminated, indicates that the target radar high voltage power supply is ready to be energized. |
| 48 | TARGET-HIGH VOLTS-HOT. | Indicator light (amber) | When illuminated, indicates that the target-tracking radar magnetron filament is heated. |

*Table XXX. Radar Power Control Panel*—Continued

| Item | Title | Type | Function |
|---|---|---|---|
| 49 | TARGET-HIGH VOLTS-PREHEAT. | Indicator light (white) | When illuminated, indicates that the target-tracking radar magnetron filament is energized. |
| 50 | TARGET-PLATE VOLTS-ON. | Indicator light (red) | When illuminated, indicates that plate voltage (low voltage) has been applied to the target track circuits. |
| 51 | TARGET PLATE VOLTS-OFF. | Toggle switch | When placed in the ON position, applies plate voltage (low voltage) to the target track system. |
| 52 | TARGET-PLATE VOLTS-READY. | Indicator light (amber) | When illuminated, indicates that plate voltage may be applied to the low voltage rectifiers in the target-tracking radar. |
| 53 | TARGET-INTLK | Indicator light (blue) | When illuminated, indicates that the target-track interlock circuit is complete. |
| 54 | MISSILE | Rotary switch (13-position). | Switches the VOLTS CHECK meter so that the amplitude of each missile-tracking radar low voltage supply may be checked. Enables the VOLTS CHECK meter to indicate the target radar voltage when placed in the TARGET position. |
| 55 | TARGET | Rotary switch (13-position). | Switches the VOLTS CHECK meter so that the amplitude of each target-tracking radar low voltage supply may be checked when the MISSILE switch is in the TARGET position. |
| 56 | VOLTS CHECK | Meter | Indicates the amplitude of the target and missile radar low voltage supplies. |
| 57 | BATTLESHORT | Toggle switch (with protector). | When placed in the ON position, shorts out the interlocks and delay timers of both tracking radar systems. |
| 58 | EQUPT VENT | Indicator light (red) | Indicates a blown fuze for each phase of the 3-phase equipment ventilation supply and that the equipment ventilation switch is in the OFF position. |

*e. Radar Range and Receiver Cabinet Assembly.* This assembly is mounted against the roadside wall of the trailer, between the missile and target console assemblies. In general, the functions performed in this assembly are range determination, range and angle error detection, if. amplification, automatic frequency and gain control, and range calibration. The assembly also contains units which provide information for automatic missile acquisition by the missile-tracking radar. On a functional basis, the radar range and receiver cabinet assembly can be divided in the center. The components on the right side pertain to the target-tracking radar system and those on the left to the missile-tracking radar system. Figure 36 and table XXXI show the controls and indicators on the radar range and receiver cabinet assembly.

*f. Heating and Ventilating Cabinet Assembly.* This assembly is mounted to the left of the radar power cabinet assembly against the curbside wall of the trailer. This cabinet is the same as the heating and ventilating cabinet assembly in the

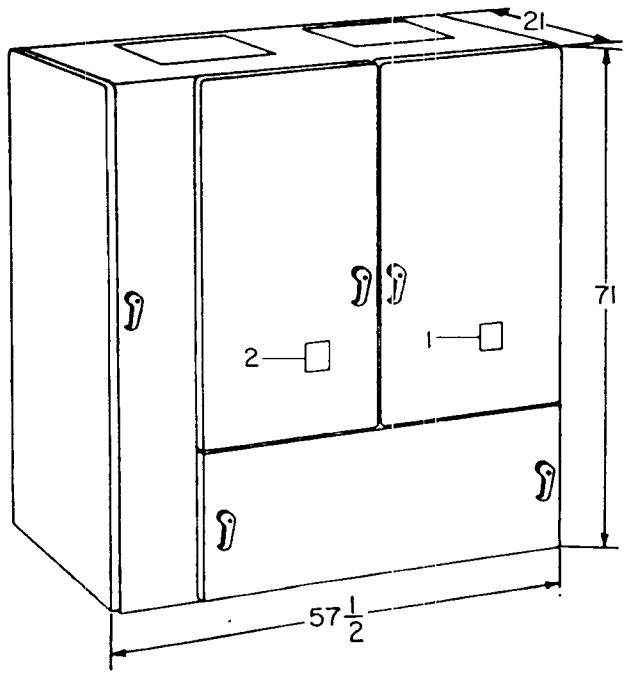


*Figure 36. Radar range and receiver cabinet assembly.*

*Table XXXI. Radar Range and Receiver Cabinet Assembly*

| Item | Title | Type | Function |
|---|---|---|---|
| 1 | Target range | Dial | Indicates the target range. |
| 2 | Missile range | Dial | Indicates the missile range. |

battery control trailer (fig. 16 and table XII).

*g. Equipment-Cooling Cabinet Assembly.* This assembly is located in the lower rear corner and against the curbside wall of the trailer. A blower assembly is installed in the cabinet to cool the vacuum tubes and other electronic equipment in the trailer. It is similar to the equipment-cooling cabinet assembly in the battery control trailer (fig. 20).

*h. Utility Cabinet Assembly.* This assembly is mounted on top of the equipment-cooling cabinet assembly. It provides suitable storage space for miscellaneous equipment.

*i. Utility Table.* The utility table is located against the roadside wall and on the left side of the trailer. It provides table space for minor repairs.

*j. Coat Cabinet.* This cabinet is located against the curbside wall and to the right of the radar power cabinet assembly. It is for the convenience of the operating personnel.

## 18. Acquisition radar

(fig. 37).

*a. Description.* The acquisition radar barbette and antenna consists of six major components; the antenna mounting legs, the antenna drive unit, the modulator, the rf coupler, the acquisition antenna, and the orientation test set. These components generate and radiate into space the high-power rf energy used in the operation of the acquisition radar. Facilities for receiving target echoes and converting them into an intermediate frequency, for rotating the antenna, for supplying acquisition antenna position data to the PPI presentation circuits in the battery control trailer, and for alining and leveling the acquisition antenna are provided. The electronic functions of the acquisition antenna assembly, are performed by the acquisition antenna assembly, the rf feed horn, and components located in three cylindrical sections or units. The three units are the antenna drive unit, the rf coupler, and the modulator. These three units are suspended one below the other from a tripod formed by the three antenna mounting legs. The antenna is mounted on top of the antenna drive unit. The operator's indicators and controls are located on the battery control console (figs. 7 and 8).

*b. Antenna Drive Unit.* This unit is the uppermost of the three cylindrical units. It houses the aximuth resolver amplifier, the drive motor, and the acquisition rotary joint.

*c. Antenna Mounting Legs.* Three antenna mounting legs, containing adjustable jacks, are used to form a tripod type of support for the acquisition radar. The adjustable jacks are used to level the antenna.

*d. Modulator.* The acquisition modulator is the lower of the three cylindrical units. The modulator generates high-voltage short duration pulses at the pulse repetition rate of the acquisition radar. The high-power pulse output is used to fire the magnetron oscillator. Power is obtained from a power supply in the battery control trailer.

*e. RF Coupler.* The rf coupler is the cylindrical unit located between the antenna drive unit and the modulator. The rf unit contains the waveguide assembly, the acquisition if. preamplifier, the automatic frequency control, the low-power servo amplifier, and the local oscillator power supply. The functions performed in the acquisition rf coupler include rf transmission and reception, intermediate-frequency amplification, frequency conversion (rf to if.), and automatic frequency control signal generation. The magnetron in the rf unit receives high voltage pulses from the acquisition modulator and produces very high-voltage pulses of rf energy for the acquisition antenna. Target echoes, received by the same antenna, are sent to the rf unit where they are converted from rf signals into if. signals. The if. signals are sent to the acquisition if. preamplifier.

*f. Antenna.* The acquisition antenna, mounted on the drive unit, is the rotating portion of the acquisition radar. The antenna houses a parabolic reflector which beams the rf energy generated by the magnetron into space. The beam can be shaped into a narrow, pencil-shaped beam, or a cosecant-squared beam of higher vertical contour that is used for target acquisition. The acqui-

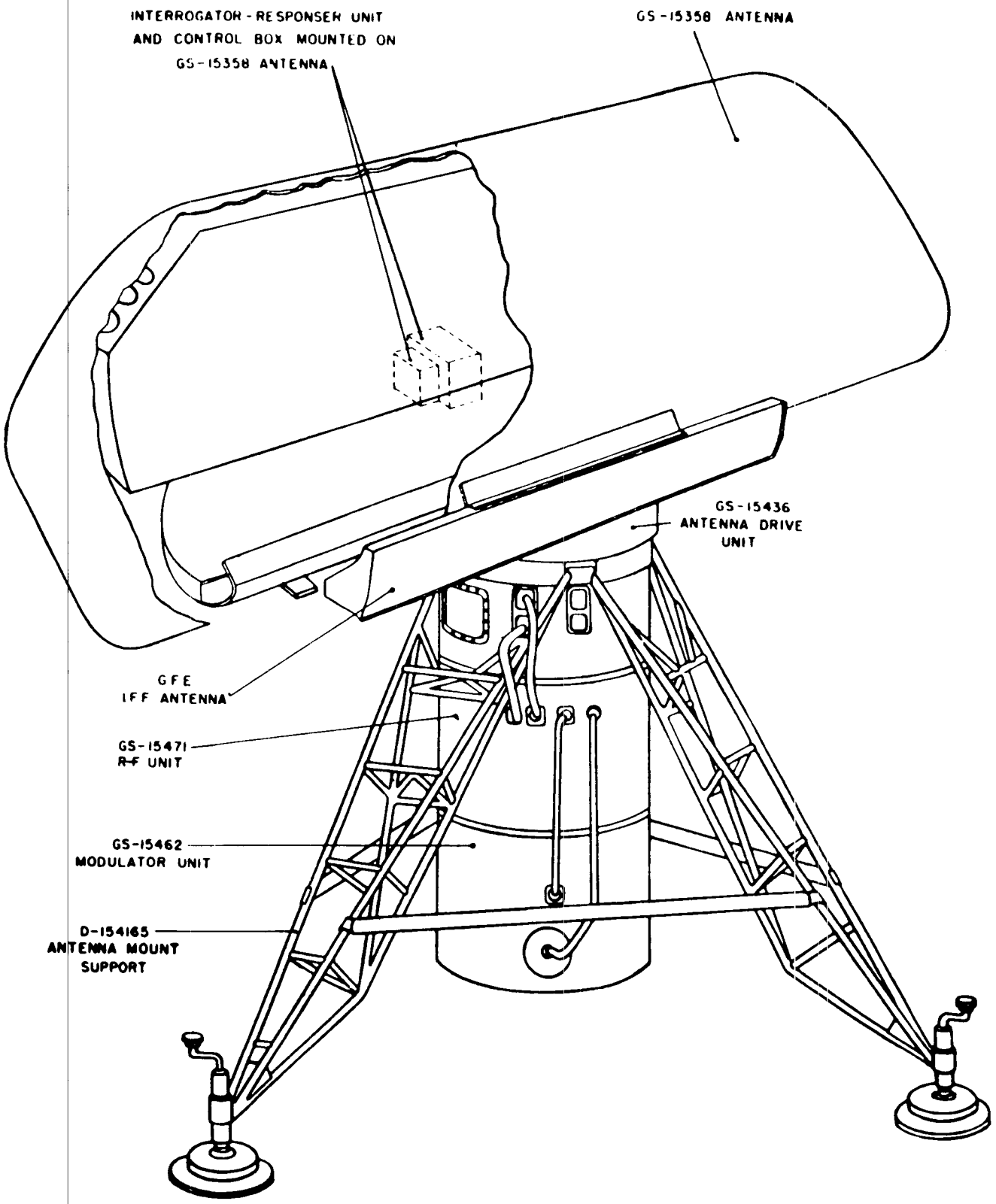


*Figure 87. Acquisition radar.*

sition antenna also houses the interrogator-responder unit. All parts of the antenna are protected by a fiber-glass cover or radome.

*g. Orientation Test Set.* The orientation test set is used to check the level and orientation of the acquisition radar. The test set contains a peep sight and a level box. During emplacement the test set is mounted on two dowel pins located on the rotating platform of the acquisition antenna.

## 19. Missile-Tracking Radar
(fig. 38)

*a. Description.* The missile-tracking radar consists of the missile-tracking antenna assembly, mounted on the missile antenna drop-bed trailer,

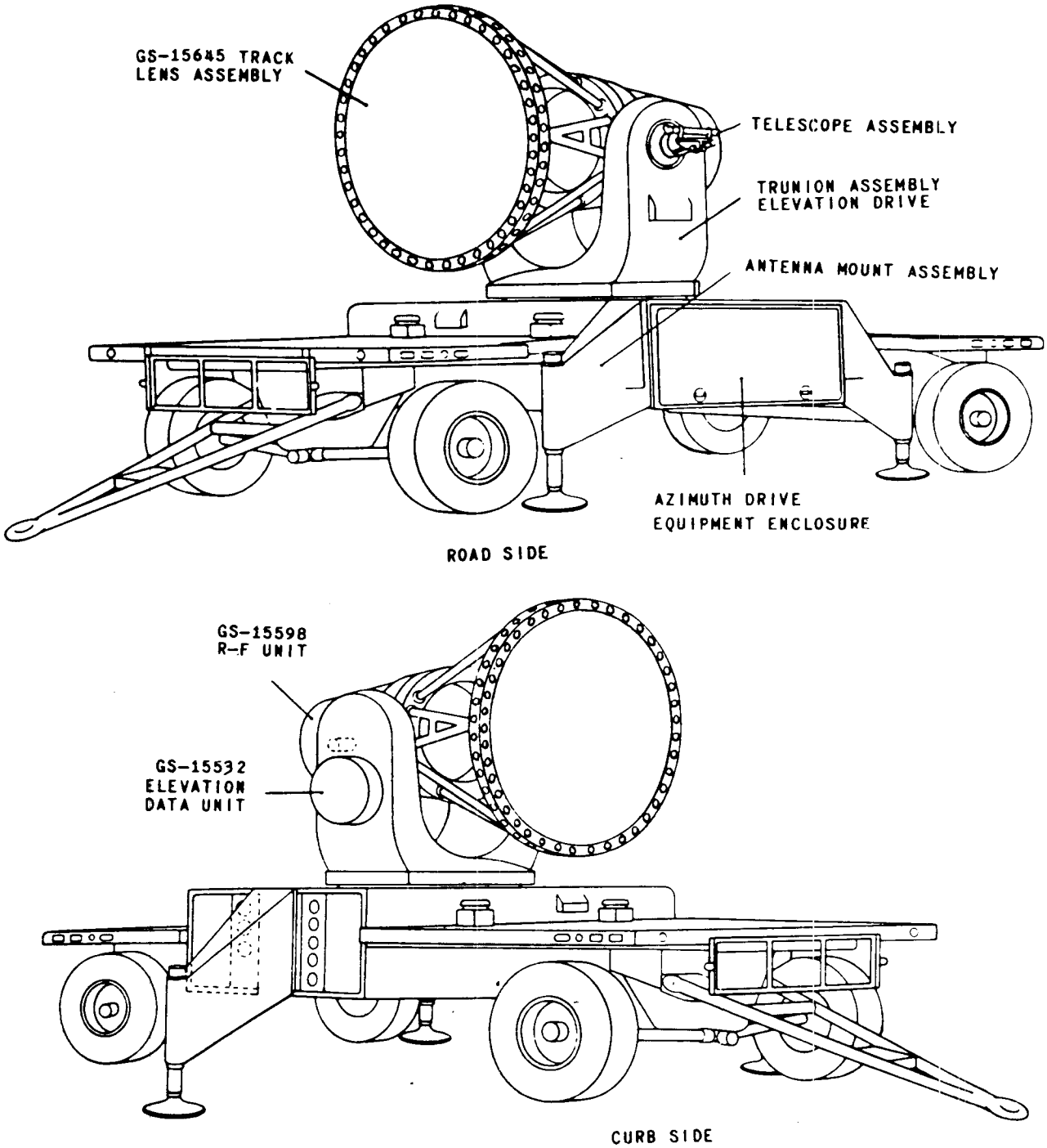


*Figure 38. Tracking radar.*

and related electronic equipment in the radar control trailer. The missile antenna trailer mounts all of the components of the missile-tracking antenna assembly and makes the antenna assembly mobile. The primary electrical functions of the missile-tracking radar are performed by components in the missile-tracking antenna assembly.

*b. Antenna Assembly.* This assembly is composed of two major subassemblies—a tracking antenna mount assembly and the azimuth drive equipment enclosure. The missile-tracking radar generates and radiates into space the high-power rf energy used in the operation of the missile-tracking radar. Commands are transmitted to the missile by modulation of the rf pulse frequency. The radar also receives the rf pulses transmitted by the missile beacon and converts them into intermediate-frequency pulses. The missile-tracking antenna assembly contains components to position the antenna, to supply antenna position data to the computer, to provide monitoring data, and to aline and level the antenna assembly.

## 20. Target-Tracking Radar

The target-tracking radar is similar to the missile-tracking radar (fig. 38). The main differences are that the missile-tracking radar contains two trigger generators and two modulators whereas the target-tracking radar contains only one of each of these. The missile-tracking radar also contains a transmitted pulse monitor and an rf monitor.

## 21. Radar Collimation Mast Assembly (fig. 39)

The radar collimation mast assembly is used in conjunction with the radar rf test set for accurately alining and for measuring or monitoring the microwave performance of the target- and missile-tracking radars. The radar collimation mast is a tapering, tubular, aluminum mast approximately 60 feet in height. A target assembly, consisting of a visual target and a rf horn assembly, is mounted on top of the mast. Suspended inside of the mast and extending almost its entire length is a rigid rf waveguide. Flexible waveguides couple the lower end of this rigid waveguide to the rf test set located at the base of the mast and the upper end to the rf horn assembly on top of the mast. To make the assembly more readily transportable, the mast and rigid waveguides are each made up of seven joinable sections. The seven mast and waveguide sections and the target assembly are assembled on the ground prior to erecting the mast. The completed assembly is then erected by means of a 20-foot boom and chain hoist assembly. The boom is attached to a double-hinged mast base plate so designed that the mast can be rotated 360° in azimuth and locked at any desired position. The mast is alined by means of four stay wires in conjunction with crossarms on the target assembly on top of the mast. The mast is also held in the erected (vertical) position by the four guy wires. The upper end of the guy wires is fastened to the wire guide assembly on top of the mast and the lower ends of the guy wires are fastened to four guy wire winch assemblies anchored to the ground. The target arms on the target assembly on top of the mast are adjustable in azimuth and the rf horn is adjustable in elevation to insure proper alinement with respect to the two tracking radars. Necessary tools and digging implements are provided for locating and emplacing the mast. The

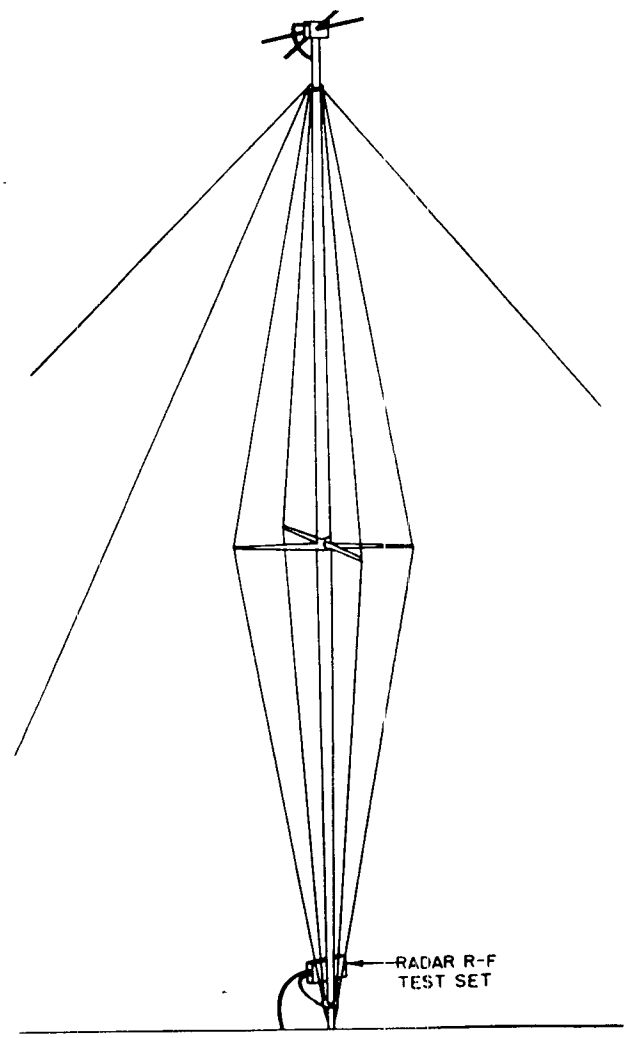


*Figure 39. Radar collimation mast assembly.*

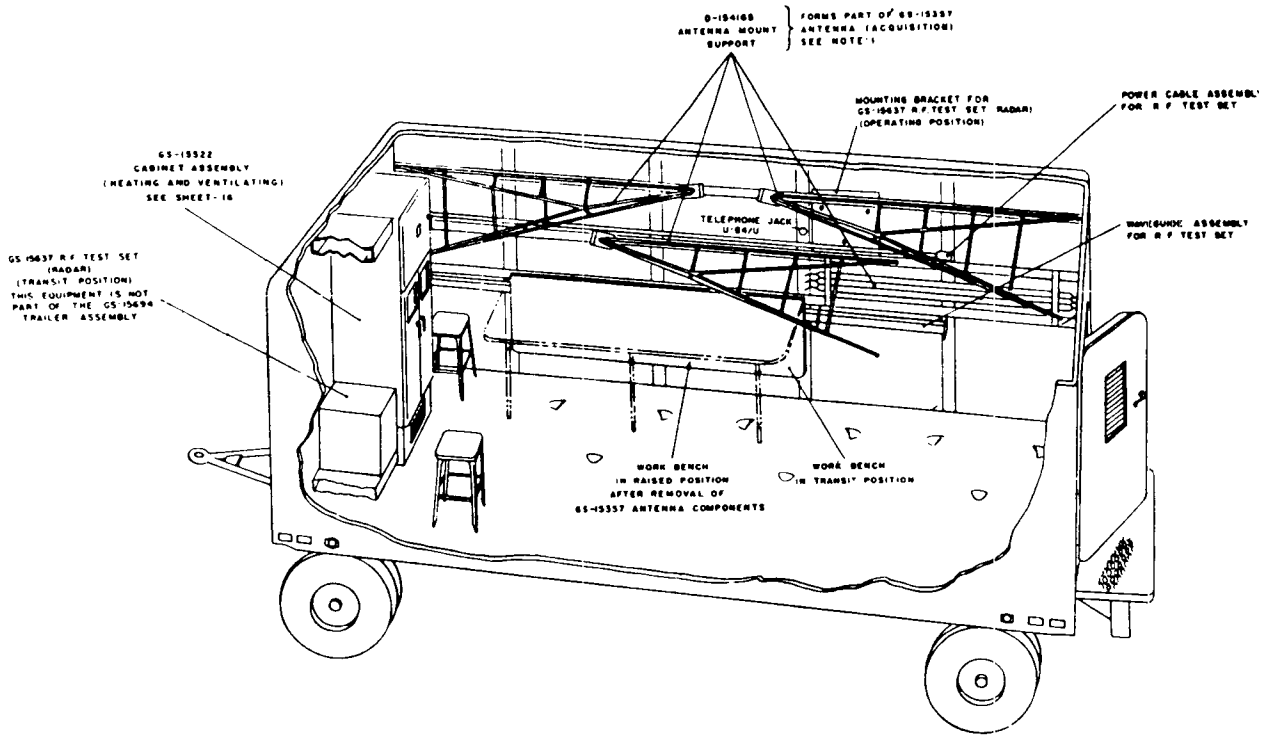


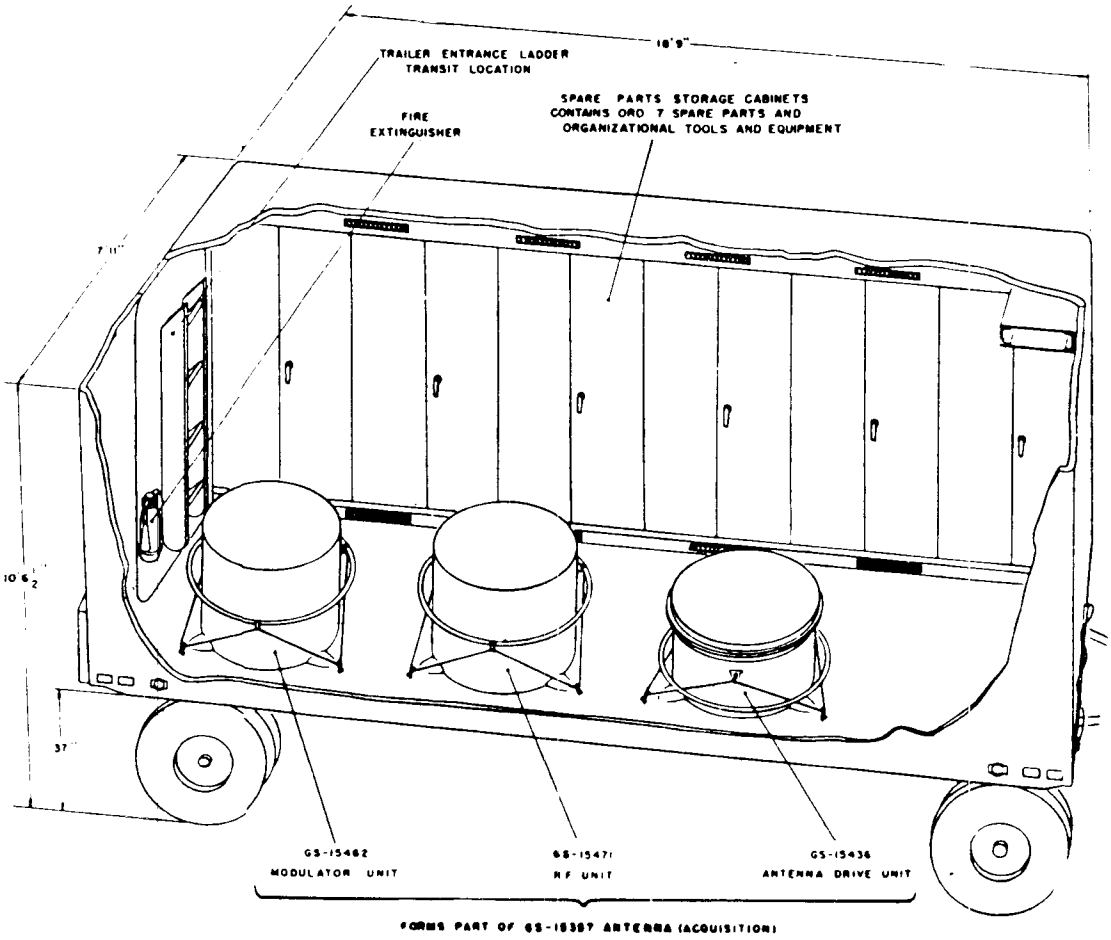


*Figure 40. Maintenance and spares trailer.*

radar collimation mast assembly components are stored in eleven specially designed cases (ten in later models). Each box contains a packing list.

## 22. Maintenance and Spares Trailer

(fig. 40)

The maintenance and spares trailer consists of two major assemblies, a heating and ventilating cabinet assembly and a spare parts cabinet. A work bench is included in the trailer. The trailer provides a heated and sheltered place for light maintenance and repair work. The acquisition rf coupler, antenna, drive unit, modulator, and antenna mounting legs are stored in the maintenance and spares trailer during march order. They are fastened in place in the trailer by special tie-down assemblies. The radar rf test set, which is also transported in the maintenance and spares trailer, is normally located at the base of its associated radar collimation mast assembly during operations. The spare parts cabinet in the maintenance and spares trailer contains those spare parts listed in the Ord-7 spare parts list.

## 23. Radar RF Test Set

The radar rf test set, in conjunction with the radar collimation mast assembly, provides a means for testing the overall radio frequency performance of the missile- and target-tracking radars. Flexible and fixed waveguides connect the radar rf test set to the rf horn on the target assembly. During operation the radar rf test set generates a test signal which is transmitted from the rf horn on top of the radar collimation mast. This test signal is received by the radars and used to check the receivers and the azimuth and elevation pointing of the antennas. The rf test set can also be used to determine the character of the output pulse of the tracking radars. The test set consists of nine subassemblies with the following front panels:

*a.* Target rf oscillator.

*b.* Panel indicator.

*c.* Missile rf oscillator.

*d.* Rf power meter.

Figure 41 and table XXXII show the controls and indicators for the radar rf test set. The data contained in the frequency meter calibration chart has been deleted from the illustration for security reasons. Earlier models (GS-15637), of this test set have the same controls but arranged differently on the panel. Figure 42 shows the front panel of the earlier model.

*Table XXXII. Radar RF Test Set*

| Subassembly | Indicator or control | Function |
|---|---|---|
| Target oscillator | OUTPUT control | Uncalibrated rf attenuator that controls the target oscillator output. |
| Target oscillator | REPELLER | Adjusted for maximum power output of the target oscillator in conjunction with the frequency control. |
| Target oscillator | FREQUENCY control | Adjust to set the frequency of the target oscillator in conjunction with the repeller control. It can also be adjusted remotely by means of the frequency servo system in the target-tracking radar. |
| Missile oscillator | OUTPUT control | An uncalibrated rf attenuator that controls the missile oscillator output. |
| Missile oscillator | REPELLER control | Adjusted for maximum power output of the missile oscillator in conjunction with the frequency control. |
| Missile oscillator | FREQUENCY control | Adjusted to set the frequency of the missile oscillator in conjunction with the repeller control. |
| Panel indicator | RF POWER DB meter | This meter is the indicator for the rf power. It is also used for measuring the +300-volt output of the power supply. |
| Panel indicator | VIDEO jack | An output for using an external oscilloscope to observe the transmitted and received pulses. |
| Panel indicator | TEL jack | Provides a means for connecting an external field telephone set. |
| Panel indicator | S/N ATTEN DB control | This calibrated rf attenuator in the waveguide subassembly is used to control the output level of the test signal. It can be remotely operated through the S/N servo system. The corresponding control in the radar control trailer is designated SIGNAL LEVEL. |

*Table XXXII. Radar RF Test Set*—Continued

| Subassembly | Indicator or control | Function |
|---|---|---|
| RF power meter | TEST switch | A 5-position switch set by the operator to make interconnections between the subassemblies as required for each operating condition. The switch settings are designated REMOTE, TRANS, TARGET OSC, MISSILE OSC, and PULSE. |
| RF power meter | PWR METER CAL switch | Used for making connections in the rf power meter circuit, as required for calibrating and measuring power. Has three calibrating positions, designated ADJ V, ADJ ∞, and ADJ 0. Has one measuring position designated MEAS. |
| RF power meter | CAL V control | A precise control of the +300-volt supply. It is adjusted until the rf power meter indicates at the V mark on the right end of its scale. The +300-volt supply must be accurately set to calibrate the rf power meter circuit. |
| RF power meter | CAL ∞ control | One of the controls used in calibrating the rf power meter circuit. Adjusted until the rf power db meter indicates a minimum within ⅛-inch of the ∞ reference mark at the left end of its scale. |
| RF power meter | CAL 0 control | One of the controls used in calibrating the rf power meter circuit. Adjusted until the rf power db meter indicates on the 0 reference mark at the right end of its scale. |
| RF power meter | MEAS FREQ control | Adjusts the cavity used for measuring the frequency of the target and missile oscillators and the radar transmitters. The classified calibration chart attached to the panel is used to convert the dial readings to frequency. |
| RF power meter | Frequency meter calibration chart (Contents classified). | Used to convert the reading of the MEAS FREQ control to megacycles or conversely to convert a given frequency to a dial reading. |
| RF power meter | TRANS PWR DB switch | This switch is set for a maximum on-scale indication on the rf power db meter. The switch setting plus the rf power db meter reading indicates the power. |
| RF power meter | LAMPS switch (pushbutton) | Turns on the lamps which illuminate the RF POWER DB meter, the S/N ATTEN DB dial, and the MEAS FREQ dial. |
| RF power meter | SPARE FUZE receptacle | Holds a spare fuze. |
| RF power meter | REG 4 AMP fuze receptacle | Holds the active 4-amp fuze. ***Warning:*** USE ONLY THE PRESCRIBED METHOD TO REPLACE FUZE. 120 VOLTS MAY BE ON THIS RECEPTACLE EVEN WHEN THE AC POWER SWITCH IS SET TO OFF. |
| RF power meter | ON–OFF switch | Turns the test set off and on at the test set. It also switches the 28-volt dc circuits. |

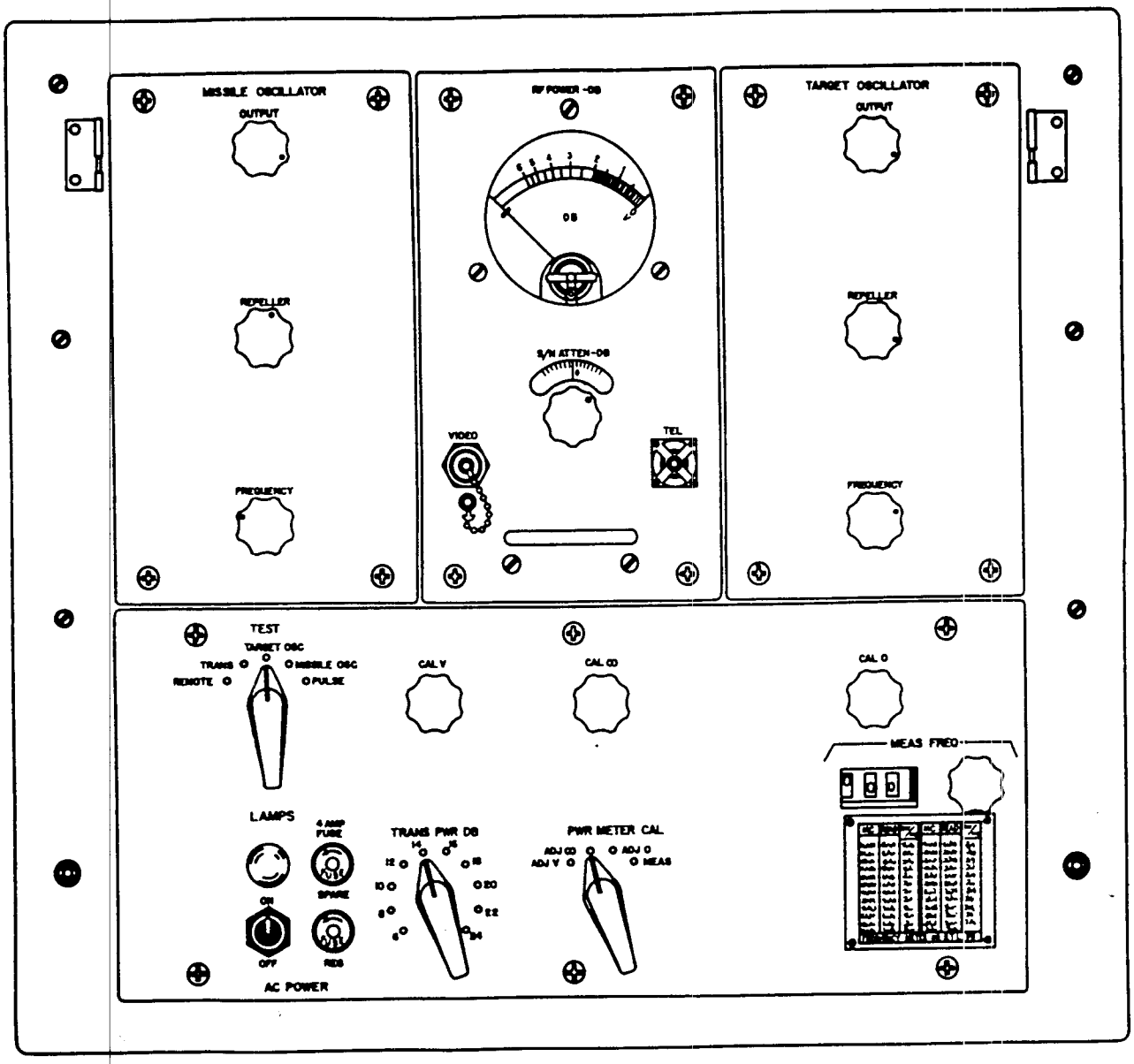


*Figure 41. Radar rf test set (GS–15868).*

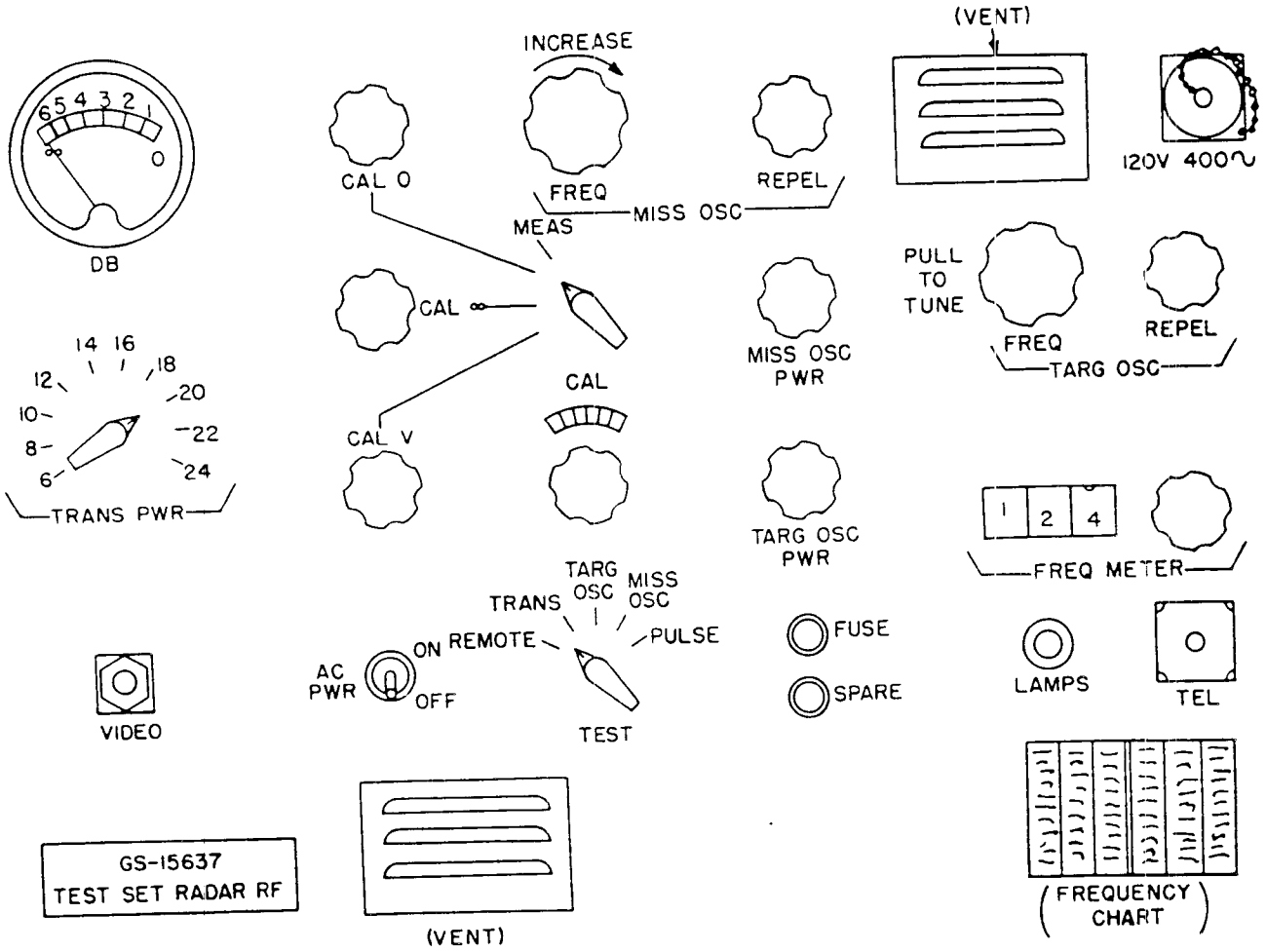


*Figure 42. Radar rf test set (GS-15637).*

## Section II. LAUNCHING AREA

### 24. Launching Area Equipment

The launching area contains the launching control trailer, the launching section equipment, and twelve launcher-loader assemblies (four per each of three sections). Electric power is provided for each launching section as well as the launching control trailer. An officer stationed in the launching control trailer is responsible for the activities in the launching area.

### 25. Launching Control Trailer
(fig. 43)

*a. Use.* The launching control trailer acts as the headquarters for all launching area activities. Therefore, all firing control circuits between the launching sections and the battery control trailer are centralized at the launching control trailer. This trailer provides facilities for directing the actions of the launching sections. The major components of the launching control trailer are illustrated in figure 43 on page 65.

*b. Launching Control Console.* (fig. 44). The launching control console is a sheet metal cabinet containing the equipment necessary to control the signals to the individual launching sections and the test responder and to provide an indication to the battery control area of compliance with such signals. This console contains the following: the test responder power and control unit and its regulated rectifier, a 28-volt dc power supply, a relay panel containing 32 relays, 2 timers, and a firing panel. The firing panel consists of a left and right section. Each section is hinged to the outer edge of the console. Table XXXIII shows the controls and indicators for the launching control console and the purpose of each.

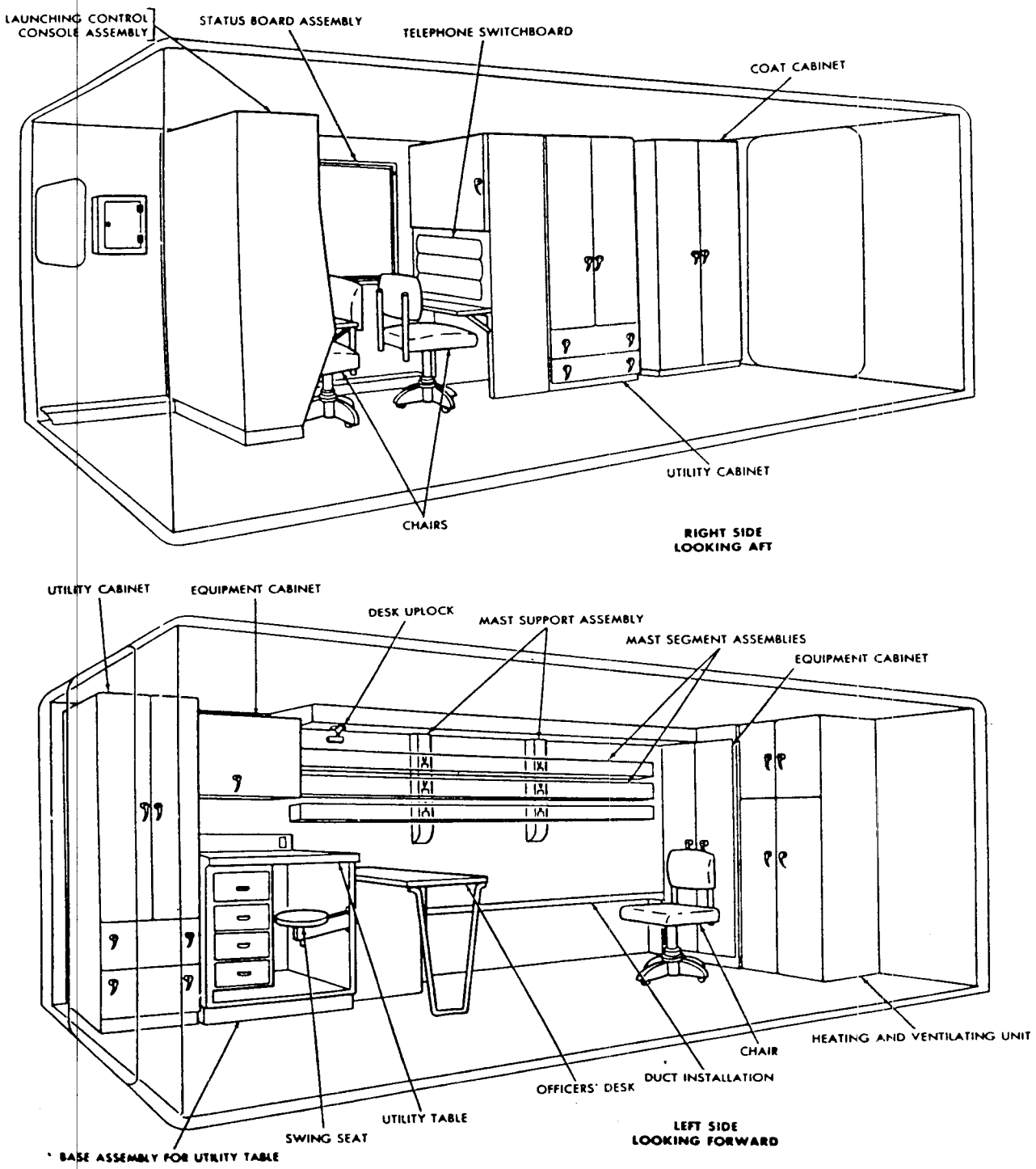


*Figure 43. Launching control trailer.*



370064 O—56——5

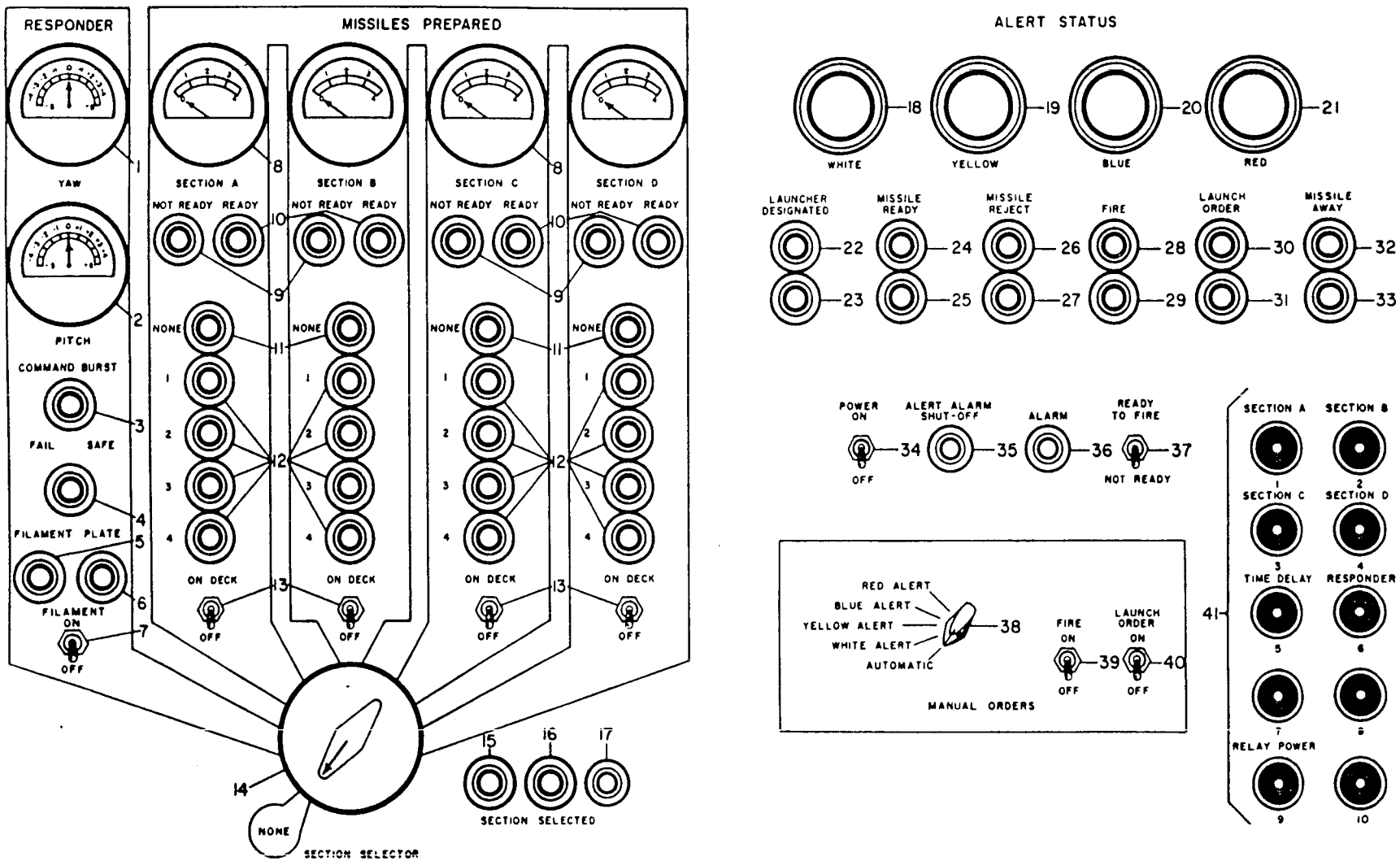


*Figure 44. Launching control console.*

*Table XXXIII. Launching Control Console*

| Item | Title | Type | Function |
|---|---|---|---|
| 1 | RESPONDER YAW | Meter | Indicates the response for YAW commands from the missile-tracking radar. |
| 2 | RESPONDER PITCH | Meter | Indicates response for PITCH commands from missile-tracking radar. |
| 3 | COMMAND BURST | Indicator light (white) | When lit, indicates that command burst signal is directed to the responder by missile-tracking radar. |
| 4 | FAIL-SAFE | Indicator light (white) | When illuminated, indicates that responder is operational and that there has been a 3- to 7-second period of time after responder has stopped receiving signals from missile-tracking radar. |
| 5 | FILAMENT | Indicator light (red) | When lit, indicates that filament supply is being applied to responder power and control unit and a 38-second time delay is activated, making the responder semioperational. |
| 6 | PLATE | Indicator light (red) | When lit, indicates that responder has been selected, filament voltage has been applied, 38-second time delay for filament heating has elapsed, and 120-volt single-phase ac power is being applied to the responder power and control unit for the plate supply. |
| 7 | FILAMENT ON-OFF | Toggle switch (ON-OFF) | During white alert status, this switch, when positioned to ON, applies filament voltage to the responder power and control unit. During YELLOW, BLUE, and RED alert status, this switch is paralleled by relay contacts, and filament voltage is applied automatically. |
| 8 | MISSILES PREPARED (one per launching section). | Meter | Indicates number of missiles prepared at launching section. The indication will be increased by one when the missile PREPARED pushbutton is depressed at the respective launching section. Indication will be decreased by one when the NOT PREPARED pushbutton is depressed at a launching section, when a missile is fired, or when a missile is rejected. |
| 9 | SECTION NOT READY (one per launching section). | Indicator light (amber) | When lit, indicates one or more of the following:<br>(1) SECTION READY TO FIRE switch is positioned to NOT READY.<br>(2) LAUNCHER DESIG pushbutton has not been depressed at section.<br>(3) Missile has been rejected at battery control area.<br>(4) Missile has been launched.<br>(5) Required crew safety keys at selected section have not been inserted and turned.<br>(6) Up-limit switch on the launcher not closed due to malfunction or improperly installed round.<br>(7) PREPARED pushbutton has not been depressed at section.<br>(8) Launcher dc power supply is not on.<br>(9) Heaters and gyros switch not ON or 60-second time delay has not elapsed. |
| 10 | SECTION READY (one per launching section). | Indicator light (green) | When lit, indicates that launcher has been designated, PREPARED pushbutton at section has been depressed, all four crew safety switches have been closed, heaters and gyros switch is ON, 60-second time delay has elapsed, and that SECTION-READY-TO-FIRE-NOT-READY switch has been positioned to READY-TO-FIRE. |

*Table XXXIII. Launching Control Console*—Continued

| Item | Title | Type | Function |
|---|---|---|---|
| 11 | Launcher designated identification NONE (one per launcher section). | Indicator light (amber) | When lit, indicates that section has not designated a launcher to fire. |
| 12 | Launcher designated identification 1, 2, 3, 4 (four per launcher section). | Indicator light (green) | When lit, indicates which launcher in section has been designated to fire and that a missile is on launcher, closing the missile away (lift-off) switch. |
| 13 | ON DECK-OFF (one per launcher section). | Toggle switch (2-position). | When positioned to ON DECK, green ON DECK light at section will light. |
| 14 | SECTION SELECTOR | 18-deck, rotary (6-position switch). | When operated to position other than NONE or RESPONDER, selects one of four launching sections, and when SECTION SELECTED pushbutton is depressed channels control signals from battery control area to that launching section. When positioned to RESPONDER, and SECTION SELECTED pushbutton has been depressed, responder tests may be made. |
| 15 | SECTION SELECTED | Indicator light (red) | When lit, indicates that SECTION SELECTED pushbutton has not been depressed and the section is not selected. |
| 16 | SECTION SELECTED | Indicator light (green) | When lit, indicates that SECTION SELECTED pushbutton has been depressed, thereby selecting section. |
| 17 | SECTION SELECTED | Pushbutton | When SECTION SELECTOR switch has been positioned to one of the four sections, or responder, and SECTION SELECTED pushbutton has been depressed, red SECTION SELECTED light goes out and green light comes on, indicating a section has been selected. |
| 18 | ALERT STATUS WHITE | Indicator light (white) | When lit, indicates the battery is in the white alert status. |
| 19 | ALERT STATUS YELLOW | Indicator light (yellow) | When lit, indicates the battery is in the yellow alert status. |
| 20 | ALERT STATUS BLUE | Indicator light (blue) | When lit, indicates the battery is in the blue alert status. |
| 21 | ALERT STATUS RED | Indicator light (red) | When lit, indicates the battery is in the red alert status. |
| 22 | LAUNCHER DESIGNATED | Indicator light (green) | When lit, indicates that launching control trailer has selected a section, the selected section has designated a launcher, a missile is on the launcher, and the missile-away (lift-off) switch is closed. |
| 23 | LAUNCHER DESIGNATED | Indicator light (red) | When lit, indicates that launching control trailer has not selected a section and the section has not designated launcher, or, the missile is not on launcher or the missile-away switch is not closed. |
| 24 | MISSILE READY | Indicator light (green) | When lit, indicates:<br>(1) Panel operator has selected section and has operated READY-TO-FIRE switch to READY.<br>(2) That section is ready to fire. |

*Table XXXIII. Launching Control Console*—Continued

| Item | Title | Type | Function |
|---|---|---|---|
| 25 | MISSILE READY | Indicator light (red) | When lit, one or more of conditions stated in 24 above have not been fulfilled. |
| 26 | MISSILE REJECT | Indicator light (green) | When lit, indicates that missile has not been rejected by battery control area. |
| 27 | MISSILE REJECT | Indicator light (red) | When lit, indicates that missile has been rejected by battery control area. |
| 28 | FIRE | Indicator light (green) | When lit, indicates that the fire order has been received from the battery control area, or, in manual red alert, the manual FIRE switch has been turned to ON. |
| 29 | FIRE | Indicator light (amber) | When lit, indicates that fire command has not been received from battery control area, or, in manual red alert, manual FIRE switch has not been turned to ON, or that fire order from either source has been discontinued. |
| 30 | LAUNCH ORDER | Indicator light (green) | When lit, during manual red alert, indicates that manual FIRE switch is positioned to ON and 2-second time delay has elapsed. During automatic operation indicates that 2-second time delay after fire command has elapsed, launch order has been initiated, and that conditions required to illuminate MISSILE READY green light (item 24 above) have been fulfilled. |
| 31 | LAUNCH ORDER | Indicator light (amber) | When lit, indicates that one or more of conditions stated in item 30 above (LAUNCH ORDER green light) have not been fulfilled, or have been discontinued. |
| 32 | MISSILE AWAY (lift-off) | Indicator light (green) | When lit, indicates that round has been launched. |
| 33 | MISSILE AWAY | Indicator light (amber) | This light is lighted automatically when MISSILE AWAY green light is extinguished. When launcher has been designated and section selected, its normal indication is that missile has not been launched. |
| 34 | POWER ON-OFF | Toggle switch | When positioned to ON, supplies 28-volt dc power for relays and lights. When positioned to OFF, power supply output is applied to alert status lights and alarm system only. |
| 35 | ALERT ALARM SHUTOFF | Pushbutton | When depressed, turns off alarm system. |
| 36 | ALARM | Pushbutton | When depressed, turns on alarm system. |
| 37 | READY TO FIRE-NOT READY. | Toggle switch (2-position). | When positioned to NOT READY, a round cannot be fired at either the launching control trailer or battery control trailer, and indicates to battery control area that launching control area is not ready to fire a missile. |
| 38 | ALERT STATUS manual | Rotary switch (5-position). | Provides automatic or manual selection for alert status. This switch is normally in the AUTO (automatic) position. When turned to WHITE, YELLOW, BLUE, or RED, the alert status is selected manually. |
| 39 | Manual FIRE ON-OFF | Toggle switch | When manual alert status selector switch is positioned to RED ALERT, and green MISSILE READY light is illuminated, this switch, when positioned to ON, initiates a 2-second time delay, extinguishes amber FIRE light, illuminates green FIRE light, and provides a circuit whereby MANUAL LAUNCH ORDER switch can be used in event 2-second time delay has elapsed without missile being fired. |

*Table XXXIII. Launching Control Console*—Continued

| Item | Title | Type | Function |
|---|---|---|---|
| 40 | Manual LAUNCH ORDER ON-OFF. | Toggle switch | When manual ALERT SELECTOR switch is positioned to RED and manual FIRE switch is positioned to ON, and 2-second time delay has elapsed and round has not been fired, this switch, when positioned to ON, extinguishes LAUNCH ORDER amber light, illuminates green LAUNCH ORDER light, and provides a circuit whereby power is applied to the booster igniter, thus firing the round. Although a part of normal firing procedure, the 2-second time delay need not elapse before this switch becomes effective. |
| 41 | Fuze panel | Fuze holders | This panel contains 10 fuze holders with appropriate fuzes which protect circuits corresponding to their respective labels. |
| | PHONE JACKS (located under shelf). Facing console, STA-1 is on right, and STA-2 is on left. | Receptables (two) | Station 1 and 2 are connected in parallel. During white alert, both are connected to the switchboard. In yellow, blue, and red alert status, STA-1 is connected to the command hot loop and STA-2 to the switchboard. |

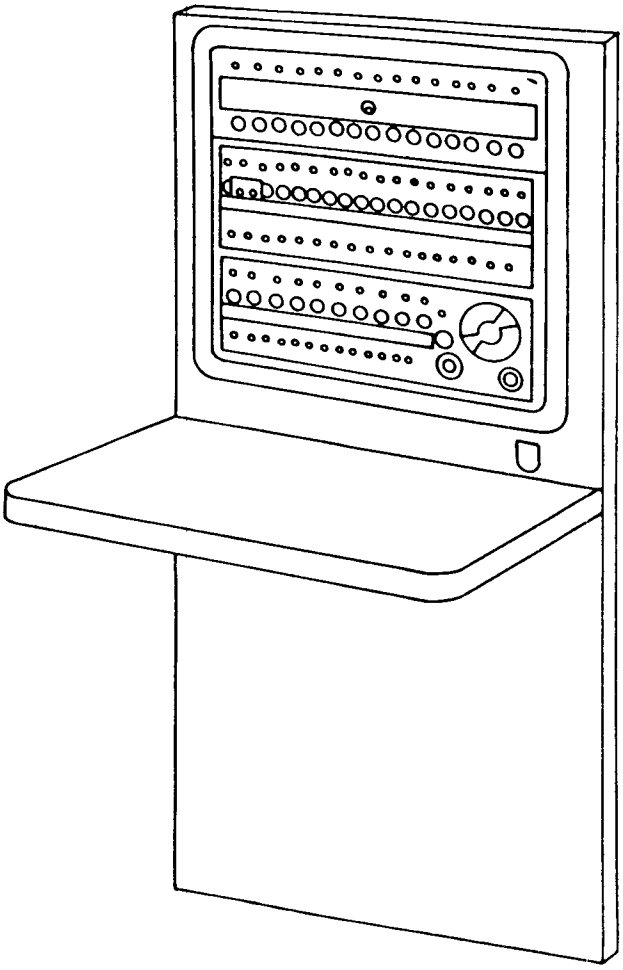

*Figure 45. Launching control trailer switchboard.*

*c. Telephone Switchboard* (fig. 45). The telephone switchboard and its cabinet, installed near the center of the curbside wall of the trailer, provide a means for the manual connection of stations, lines, and trunks. Command and technical hot loop circuits are included.

*d. Heating and Ventilating Unit.* A heating and ventilating unit, installed in a cabinet on the forward wall of the trailer, provides heating and/or ventilating facilities.

*e. Test Responder* (fig. 46). The test responder, installed on top of a mast attached to the front of the launching control trailer, is essentially the beacon system of a missile guidance unit. It is used in testing the missile-tracking radar.

*f. Alarm Siren* (fig. 47). The alarm siren is installed on the rear upper corner on the roadside of the trailer. The alarm is used to alert all crew personnel to report to their stations.

*g. Main Switch Box.* Figure 48 shows the main switch box and junction box in the launching control trailer. Table XXXIV shows the controls located in this switch box and the purpose of each.

*h. Interior Furnishings.* Beside the major items mentioned above, the trailer is furnished with chairs, tables, and filing cabinets (fig. 43).

## 26. Launching Section Equipment

The launching section contains the necessary equipment to function as the intermediate control station between the launcher-loaders (in the sec-

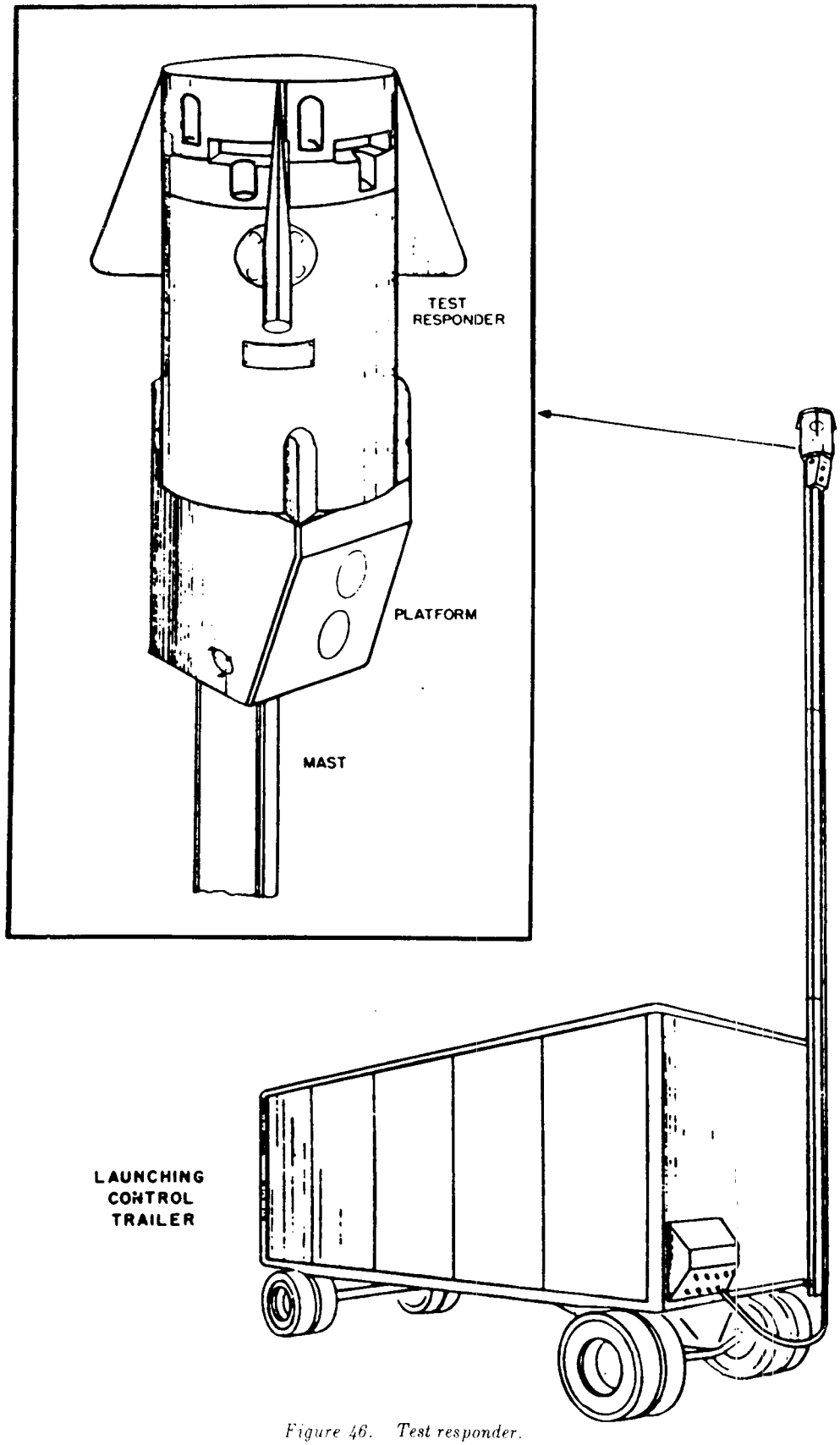


*Figure 46. Test responder.*

*Table XXXIV. Main Switch Box, Launching Control Trailer*

| Title | Type | Function |
|---|---|---|
| MAIN POWER ON-OFF | 2-position switch | When positioned to ON and trailer generator is operational, power is applied to CONSOLE POWER and HEAT & VENT POWER AND RECTIFIER switches, and all other circuits in trailer. |
| CONSOLE POWER ON-OFF. | 2-position rotary-type switch | When turned ON, applies power to launching control console if the MAIN POWER switch is ON. |
| HEAT & VENT POWER AND RECTIFIER ON-OFF. | 2-position rotary-type switch | When turned ON, applies power to heater and ventilating and rectifier systems if the MAIN POWER switch is ON. |
| FUZE PANEL | Fuze holders | This panel contains 16 fuze holders, with appropriate fuzes, which protect circuits corresponding to their respective holders. Spare fuzes are mounted on clips on the inside of the switch box door. |

tions) and the launching control trailer. The equipment installed in each launching section includes a launching section control (or operating) cabinet (which contains the section control panel), the section power cabinet (fig. 49), and the launcher-loaders (fig. 52). These provide facilities for the following:

*a.* Erecting the launcher.

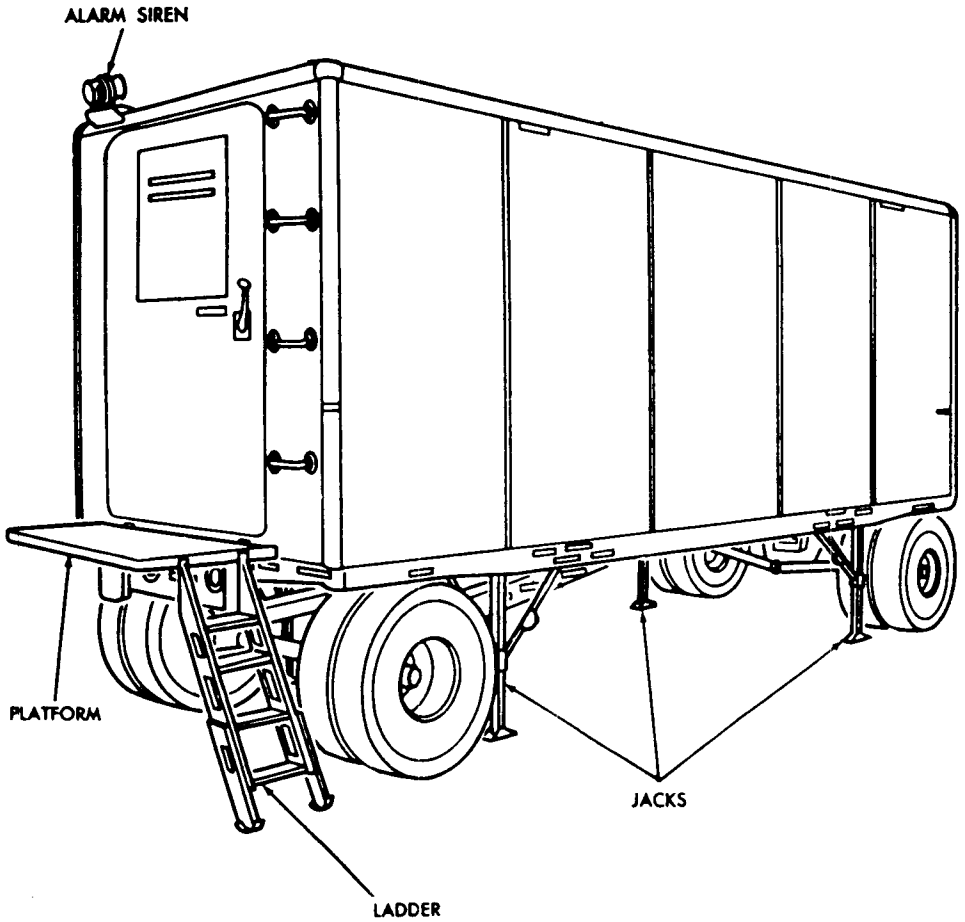


*Figure 47. Alarm siren installed.*

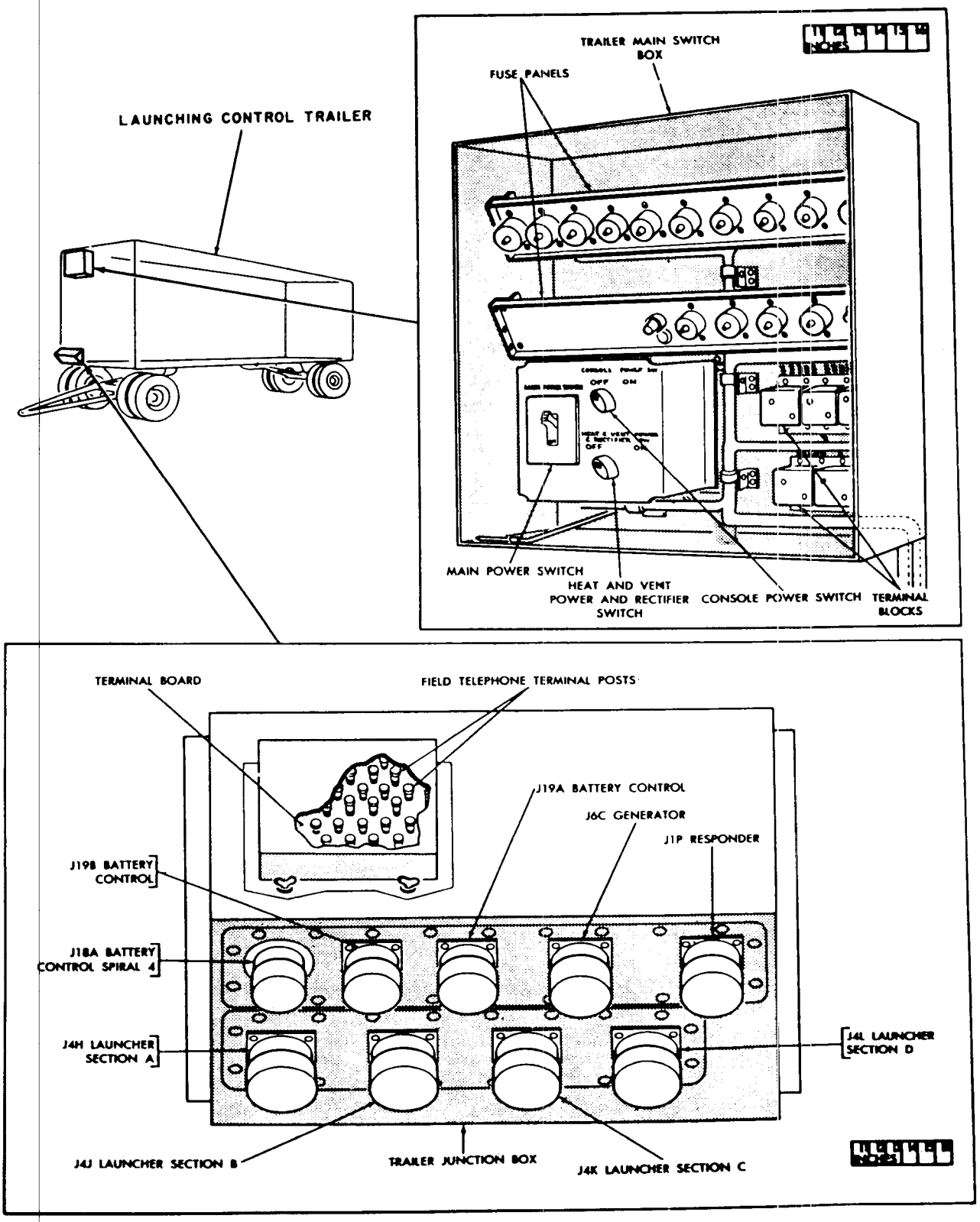


*Figure 48. Main switch box and junction box, launching control trailer.*

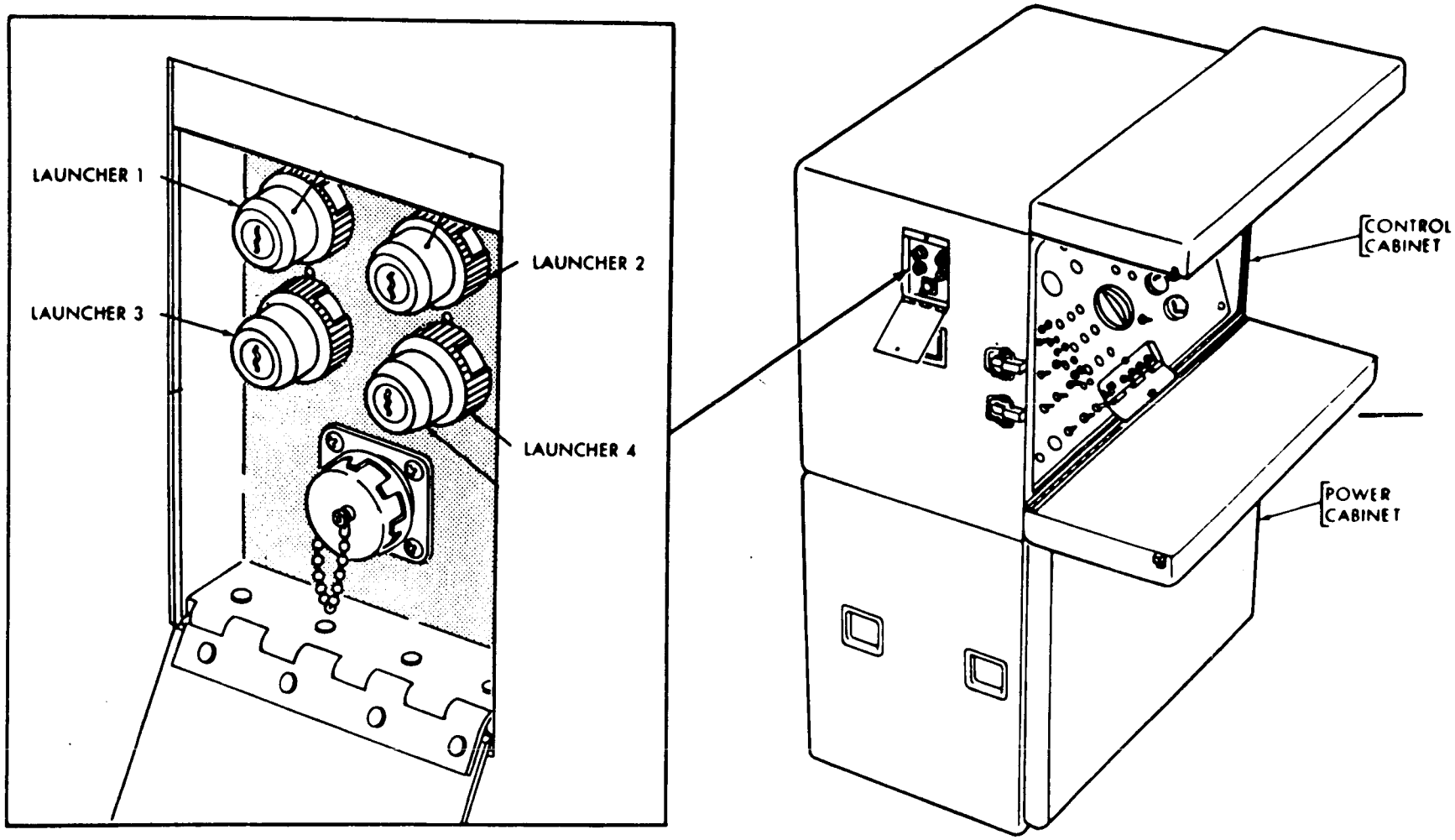


*Figure 49. Launching section control and power cabinets.*

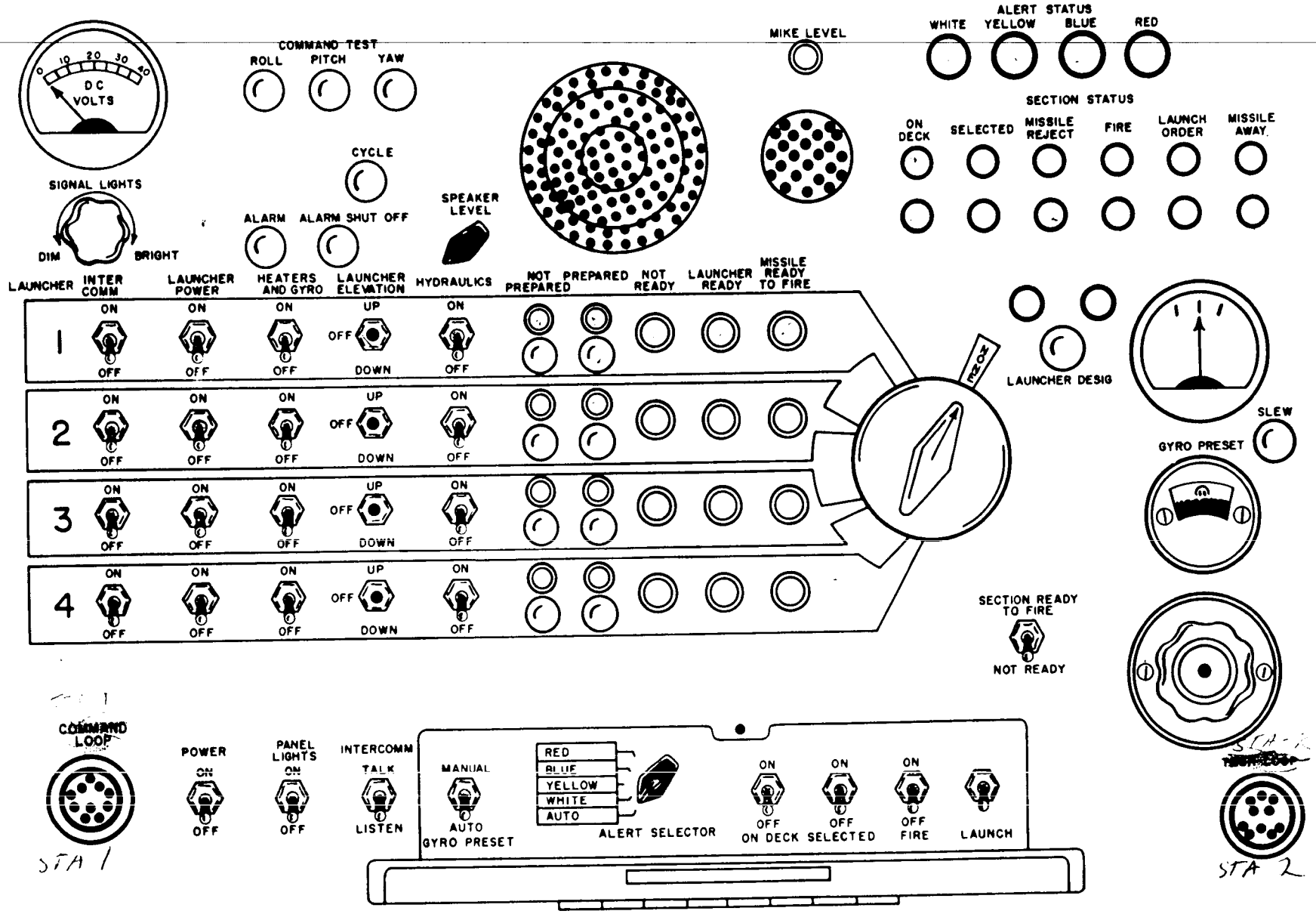


*Figure 50. Launching section control panel.*

*b.* Controlling the firing circuits and the external electric power for the missile.

*c.* Prefiring operations.

*d.* Emergency prefiring and firing operations.

*e.* Indicating the status of each launcher-loader in the section to the launching-control trailer.

*f.* Signaling the status of the individual launchers and launching sections to the launching control trailer.

*g.* Manual or automatic preset of the missile roll gyro.

*h.* Two-way communications with the other stations in the battery, including the launchers.

## 27. Launching Section Control Panel

(fig. 50)

The launching section control cabinet, mounted on top of the launching section power cabinet, is approximately 27 inches high, 34 inches wide, and 20 inches deep. The section control panel contains the switches, indicator lights, and meters used in preparing and firing a round and to coordinate the activities of the various launcher crews with the conditions prescribed from the launching control trailer. Table XXXV shows the controls and indicators and the purpose of each.

*Table XXXV. Launching Section Control Panel*

| Title | Type | Function |
|---|---|---|
| CHARGING VOLTAGE | Voltmeter | Indicates output voltage from missile battery-float charger. |
| COMMAND TEST ROLL | Pushbutton | When depressed (for testing missile), sends a roll command to missile through the designated launcher. Missile's response to this command is movement of its control surfaces for right roll. When pushbutton is released, control surfaces should return to neutral. |
| COMMAND TEST PITCH | Pushbutton | When depressed (for testing missile) sends pitch command to missile through the designated launcher. Missile's response to this command is movement of its control surfaces for left climbing turn. When pushbutton is released and launcher erecting arm is in DOWN position, control surfaces will return to −7° position. |
| COMMAND TEST YAW | Pushbutton | When depressed (for testing missile) sends a yaw command to missile through the designated launcher. Missile's response to this command is movement of its control surfaces for right climbing turn. When pushbutton is released, and launcher erecting arm is in DOWN position, control surfaces will return to −7° position. |
| COMMAND TEST BURST (not included on later models). | Pushbutton | When depressed (for testing missile), sends a burst command to missile through the designated launcher. Missile's response to this signal will be an audible click heard on a telephone connected to STA–2 at the section control cabinet. |
| COMMAND TEST CYCLE | Pushbutton | When depressed (for testing missile), all controls on missile will move in one direction and back to neutral. This cycle continues as long as the pushbutton is depressed. When pushbutton is released, controls will move back to neutral. The primary function of this control is to circulate hydraulic fluid through missile. |
| SIGNAL LIGHTS DIM–BRIGHT. | Rheostat | Adjusts intensity signal lights on section control panel. |
| ALARM | Pushbutton | When depressed, actuates alarm buzzer if POWER switch is ON. |
| ALARM SHUTOFF | Pushbutton | When depressed during YELLOW, BLUE, or RED alert status, shuts off alarm buzzer if POWER switch is ON. |
| SPEAKER LEVEL | Potentiometer | Controls volume of speaker on section operating panel. |
| MIKE LEVEL | Indicator light | Indicates voice level to microphone. |
| ALERT STATUS WHITE | Indicator light (white) | When lit, indicates that battery is in white alert status. |

*Table XXXV. Launching Section Control Panel*—Continued

| Title | Type | Function |
|---|---|---|
| ALERT STATUS YELLOW | Indicator light (yellow) | When lit, indicates that battery is in yellow alert status. |
| ALERT STATUS BLUE | Indicator light (blue) | When lit, indicates that battery is in blue alert status. |
| ALERT STATUS RED | Indicator light (red) | When lit, indicates that battery is in red alert status. |
| ON DECK | Indicator light (amber) | When lit, indicates to section that it has not been preselected at launching control trailer. |
| ON DECK | Indicator light (green) | When lit, indicates to section that it may be selected at launching control trailer to fire the next round. |
| SELECTED | Indicator light (amber) | When lit, indicates to section that it has not been selected at launching control trailer to fire the next round. |
| SELECTED | Indicator (green) | When lit, indicates to section that it has been selected at launching control trailer to fire the next round. |
| MISSILE REJECT | Indicator light (green) | When lit, indicates that missile has not been rejected for firing at battery control area. |
| MISSILE REJECT | Indicator light (red) | When lit, indicates that missile has been rejected for firing at battery control area. |
| FIRE | Indicator light (amber) | When lit, indicates that fire command signal has not been given either in the launching area or in the battery control area. |
| FIRE | Indicator light (green) | When lit, indicates that during automatic operation fire command signal has been given at battery control area and during manual red alert, the manual FIRE switch has been operated to ON in the launching control trailer or launching section. |
| LAUNCH ORDER | Indicator light (amber) | When lit, indicates that launch order has not been generated. |
| LAUNCH ORDER | Indicator light (green) | When lit, indicates: (1) launching section has designated launcher; (2) launching control trailer has selected section; (3) battery control area or launching control trailer has given fire command; (4) and 2-second time delay between fire and launch has elapsed. During manual red alert status, (1) section has designated launcher and operated the manual FIRE and LAUNCH switches to ON, and (2) power is applied to booster igniter for firing missile. |
| MISSILE AWAY | Indicator light (amber) | When round is properly installed, closing missile-away (lift-off) switch on transporting and handling rail, this light comes on. |
| MISSILE AWAY (lift-off) | Indicator light (green) | When lit, indicates that round has left the launcher when fired. Prior to firing, indicates the missile-away switch on the launcher is not closed. |
| INTERCOM ON-OFF (one per launcher). | Toggle switch | When positioned to ON, crew at the launcher can talk to section. This circuit is also controlled by intercom TALK-LISTEN switch. |
| LAUNCHER POWER ON-OFF (one per launcher). | Toggle switch | When the POWER switch is ON, and this switch is turned ON, 28-volt dc power is supplied to launcher and missile, provided the TEST-FIRE switch at the launcher operating panel is at the FIRE position. |
| HEATERS AND GYROS ON-OFF (one per launcher). | Toggle switch | When control of the launcher is with section control panel operator and this switch is turned ON, it applies external 28-volt dc power to the guidance-section heaters and gyros and to the 60-second timer for the missile designated to be fired. |

*Table XXXV. Launching Section Control Panel*—Continued

| Title | Type | Function |
|---|---|---|
| LAUNCHER ELEVATION UP-DOWN, OFF (one per launcher). | Toggle switch | When control of launcher is with section control panel operator, lowers (DOWN) or raises (UP) launcher erecting arm. When positioned to OFF, erecting arm is held in position. |
| MISSILE HYDRAULICS ON-OFF (one per launcher). | Toggle switch | When control of launcher is with section control panel operator and switch is positioned to ON, 208-volt 3-phase power is supplied to missile-testing hydraulic pump motor. |
| NOT PREPARED (one per launcher). | Indicator light (red) | When lit, indicates that round is not prepared for firing. |
| NOT PREPARED (one per launcher). | Pushbutton | When depressed, illuminates NOT PREPARED red indicator light for its respective launcher. |
| PREPARED (one per launcher). | Indicator light (green) | When lit, indicates that round is prepared for firing. |
| PREPARED (one per launcher). | Pushbutton | When depressed, after necessary relays are closed, illuminates PREPARED green light for its respective launcher, and advances the MISSILES PREPARED meters at launching control and battery control trailers one unit. |
| NOT READY (one per launcher). | Indicator light (red) | When lit, indicates that launcher crew has not closed the crew safety switches on section control panel. |
| LAUNCHER READY (one per launcher). | Indicator light (amber) | When lit, indicates that launcher crew has closed crew safety switches on section control panel. |
| MISSILE READY TO FIRE (one per launcher). | Indicator light (green) | When lit, indicates: (1) Round on launcher is prepared as indicated by PREPARED green light. (2) launcher crew is safe (in section revetment or personnel room), as indicated by LAUNCHER READY amber light. (3) HEATERS AND GYROS switch is ON for missile on launcher, and 60-second time delay has passed. (4) launcher erecting arm is up and locked. (5) TEST-FIRE switch on the launcher operating panel is in FIRE position. |
| Launcher Designator | 22-deck, rotary, 5-position switch. | Designates the next missile to be fired, and channels control signals to the designated launcher and missile. It also indicates to launching control trailer which launcher has been designated to fire. |
| LAUNCHER DESIG | Indicator light (red) | When lit, indicates that the next launcher to fire has not been designated. |
| LAUNCHER DESIG | Indicator light( green) | When lit, indicates that the next launcher to fire has been designated. |
| LAUNCHER DESIG | Pushbutton | When depressed, extinguishes LAUNCHER DESIG red light and illuminates LAUNCHER DESIG green light, indicating next launcher to fire has been designated. |
| NULL INDICATOR | Meter | Indicates presetting of roll gyro. When preset has been accomplished an indication of zero is obtained. Also used to check balance of 250-volt and 20-volt taps on preset power supply in power cabinet. Indications of this meter are also used to indicate continuity of roll potentiometer winding. |
| SLEW (test function) | Pushbutton | Tests roll gyro potentiometer. Smooth oscillation of pointer on nullmeter while pushbutton is depressed indicates continuity of roll potentiometer winding. |
| GYRO PRESET | Indicator dial | Indicates setting of manual resolver for presetting roll gyro when gyro-preset switch is in MANUAL position. |
| GYRO PRESET | Manual resolver | Used to manually set gyro preset dial in accordance with data from the battery control area. Gyro-preset switch must be in MANUAL position. |

*Table XXXV. Launching Section Control Panel*—Continued

| Title | Type | Function |
|---|---|---|
| SECTION READY TO FIRE-NOT READY. | Toggle switch (2-position) | When turned to NOT READY position, a round cannot be fired from that section, and an indication is provided to launching control trailer that the section is not ready to fire. |
| POWER ON-OFF | Toggle switch | When positioned to ON, 28-volt dc power from section's engine generator will be supplied to section control panel and launcher operating panel. |
| PANEL LIGHTS ON-OFF | Toggle switch | When positioned to ON, turns on illuminating panel lights on upper door. |
| INTERCOM TALK-LISTEN. | Toggle switch (2-position, spring-loaded to LISTEN position). | With intercom switch ON for any launcher and TALK-LISTEN switch in LISTEN position, operator can receive messages from launcher crew. When switch is positioned to TALK, operator can talk to all launcher crews. |
| GYRO PRESET MANUAL-AUTO. | Toggle switch (2-position) | When positioned to AUTO, missile roll gyro is automatically preset by data from battery control area at the selected section. When positioned to manual, or when section not selected, missile roll gyro preset must be set by manual resolver on section control panel. |
| Manual ALERT SELECTOR | 5-position rotary-type | When positioned to AUTO, battery control trailer or launching control trailer controls alert status lights. When positioned to manual alert status condition, section manually selects alert condition for section. When switch has been positioned to one of four alert status conditions, the respective light for that alert status will illuminate. |
| Manual ON DECK ON-OFF | Toggle switch | During YELLOW, BLUE, or RED manual alert status, this switch, when positioned to ON, extinquishes amber ON DECK light and illuminates green ON DECK light. |
| Manual SELECTED ON-OFF. | Toggle switch | When manual ALERT SELECTOR switch is positioned to YELLOW, BLUE, or RED, this switch, when positioned to ON, extinguishes amber SECTION SELECTED light and illuminates green light. |
| Manual FIRE ON-OFF | Toggle switch | When manual ALERT SELECTOR switch is positioned to RED, this switch, when positioned to ON, extinguishes amber FIRE light and illuminates green FIRE light. At the same time, a circuit is provided whereby manual LAUNCH switch becomes operative. Circuits are also provided which activate firing buzzer and relays which puts missile on internal power and shuts off missile hydraulics. |
| Manual LAUNCH ON-OFF | Toggle switch | During manual red alert status, with manual FIRE switch ON, and assuming that launcher has been designated, this switch, when positioned to ON, extinguishes LAUNCH ORDER amber light, and illuminates green LAUNCH ORDER light. Also uncages gyro and ¼ second later power is applied to booster igniter to fire the round. |
| CREW SAFETY LOCK (one per launcher. Located behind access door on left side of cabinet). | Key switch | Completes launcher READY and NOT READY light circuit. In AUTOMATIC operation, all *four* switches are in series and must *all be closed* to complete circuit to fire from *any launcher*. These keys are turned to fire only after all of the launcher crew are in the revetment or the section personnel room. |
| LAUNCHER ORIENT RESOLVER (one per launcher). | Synchro Resolver (located on relay rack inside cabinet). | Used to set in the launcher orientation corrections. |

*Table XXXV. Launching Section Control Panel*—Continued

| Title | Type | Function |
|---|---|---|
| PHASE ADJUST (located on relay rack inside cabinet). | Potentiometer (screw adjustment). | Adjusts for phase angle error due to length of cable from launching control and battery control trailers. |
| Telephone crank | Crank (two) | When cranked, actuates switchboarddrop buzzers on switchboard. |
| STA—1 (left side facing panel) | Phone jack | Connected as follows: during white alert, to switchboard; during yellow, blue, and red alerts, to technical loop for sections not selected and to the command hot loop for the selected section. |
| STA—2 (right side facing panel). | Phone jack | Connected to switchboard except when section is selected, then is connected to technical hot loop. |

## 28. Launching Section Power Cabinet

(fig. 51).

The launching section power cabinet utilizes electric power from the engine-driven generator in the launching section to provide power for the operation of the launching section and for checking, testing, and firing the missiles. A blower assembly is built into the power cabinet to cool the equipment. The cabinet is approximately 29 inches high, 34 inches wide, and 20 inches deep. It contains the following components:

*a.* Missile battery charger.

*b.* Cycling unit.

*c.* Fin test oscillator.

*d.* Power supply.

*e.* Gyro preset system.

*f.* Data converter.

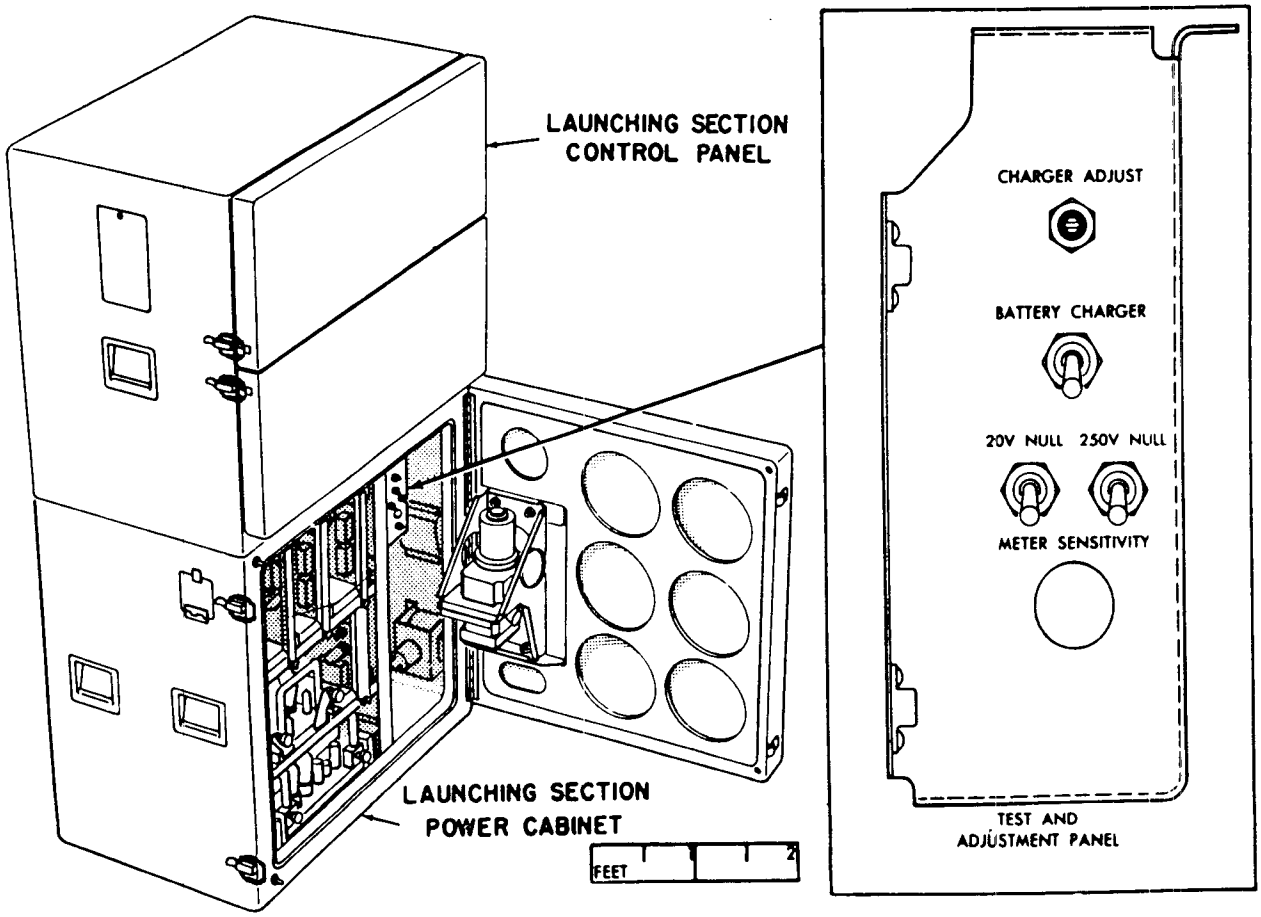


*Figure 51. Launching section power cabinet preset test panel.*

*Table XXXVI. Launching Section Power Cabinet Present Test Panel*

| Item | Title | Type | Function |
|---|---|---|---|
| 1 | CHARGER ADJUST | Potentiometer (screw adjustment). | Adjusts voltage output of battery charger (read on voltmeter at launching section control panel). |
| 2 | BATTERY CHARGER | Toggle switch ON–OFF | Turns battery charger on and off. |
| 3 | 20-VOLT NULL | Toggle switch (spring-loaded to OFF position). | When closed, checks 20-volt balanced output of preset power supply. Adjust 20-V BAL control on power supply chassis for null indication on nullmeter on section control panel. |
| 4 | 250-VOLT NULL | Toggle switch (spring-loaded to OFF position). | When closed, checks 250-volt balanced output of preset power supply. Adjust 250-V BAL control on power supply chassis for null indication on nullmeter on section control panel. |
| 5 | METER SENSITIVITY | Pushbutton | Controls sensitivity of nullmeter on section control panel when used in conjunction with 250-volt null switch. |

Table XXXVI shows the controls on the preset test panel of the power cabinet and the purpose of each.

## 29. Launcher-Loader Assembly
(fig. 52)

*a. Description.* Each launcher-loader assembly includes a launcher and five sections of loading racks. Three sections of the racks are joined together on the left side of the launcher to be used for storing missile-booster combinations. The other two sections are joined together on the right side of the launcher to be used for storing empty launching and transporting rails or rejected rounds until they are removed. Each launcher-loader assembly has facilities for accommodating four rounds, one on the launcher erecting arm, and one at each of three missile-testing stations on the loading racks to the left of the launcher. Additional sections of rack may be added if necessary. The assembly is equipped with the electric and hydraulic equipment needed to conduct necessary prefiring missile tests and to erect the round for firing. Signal circuits, control circuits, and a two-way voice communication system are provided between each launcher-loader assembly and its associated launching section. The components of the launcher-loader assembly are shown in figure 52.

*b. Launcher* (fig. 53). The launcher consists of the launcher-loader assembly less the loading racks. The base structure of the launcher is a welded open-frame box type truss. The forward diagonal braces are held in position by clevis pins instead of being welded. This facilitates the installation and removal of the hydraulic and electric equipment. The forward base structure incorporates a handcrank-operated leveling jack. There are two other handcrank-operated leveling jacks on the launcher, one on each of the two stabilizing legs. Each consists of a worm-gear drive operating a jack screw. The leveling jacks are used to raise and lower the entire launcher. Each jack has approximately a 20-inch travel. The base for each jack is a 14-inch float. Provisions are incorporated for securing the launcher after it is emplaced. Protruding at right angles from each side of the base structure are two open framework trusses, one forward and one about the center, to which the loading racks are attached. A shock absorber is mounted on the forward end of the base structure to cushion the shock from the erecting arm at the end of its descent. On the aft corners of the base are four lugs, two on each side, to which the two launcher stabilizing legs are attached. Each leg incorporates a leveling jack in its outer end. When the launcher is towed, the legs are folded against the base and held in position by slip pins. The loading racks are detached and transported in the prime mover during march order. When the launcher is emplaced, the legs are unfolded until they reach the stops welded on the base structure before the loading racks are fastened to the sides of the launcher.

*c. Running Gear Assembly.* The launcher is transported by means of the running gear assembly. This assembly consists essentially of an axle and two wheels. The running gear is attached to the launcher base structure by means of two pedestals attached to the top of the axle and engaged by clamps on the bottom of each side of the launcher base structure.



370064 O—56——6

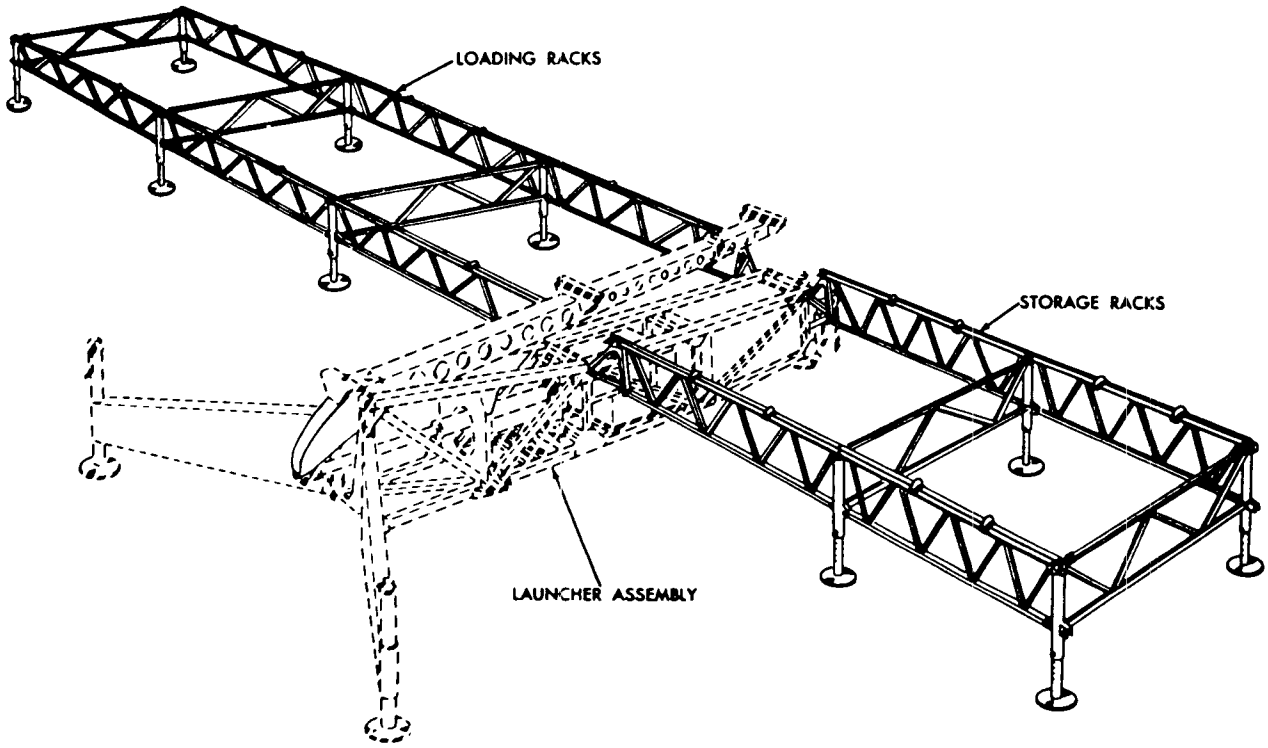


*Figure 52. Launcher-loader assembly.*

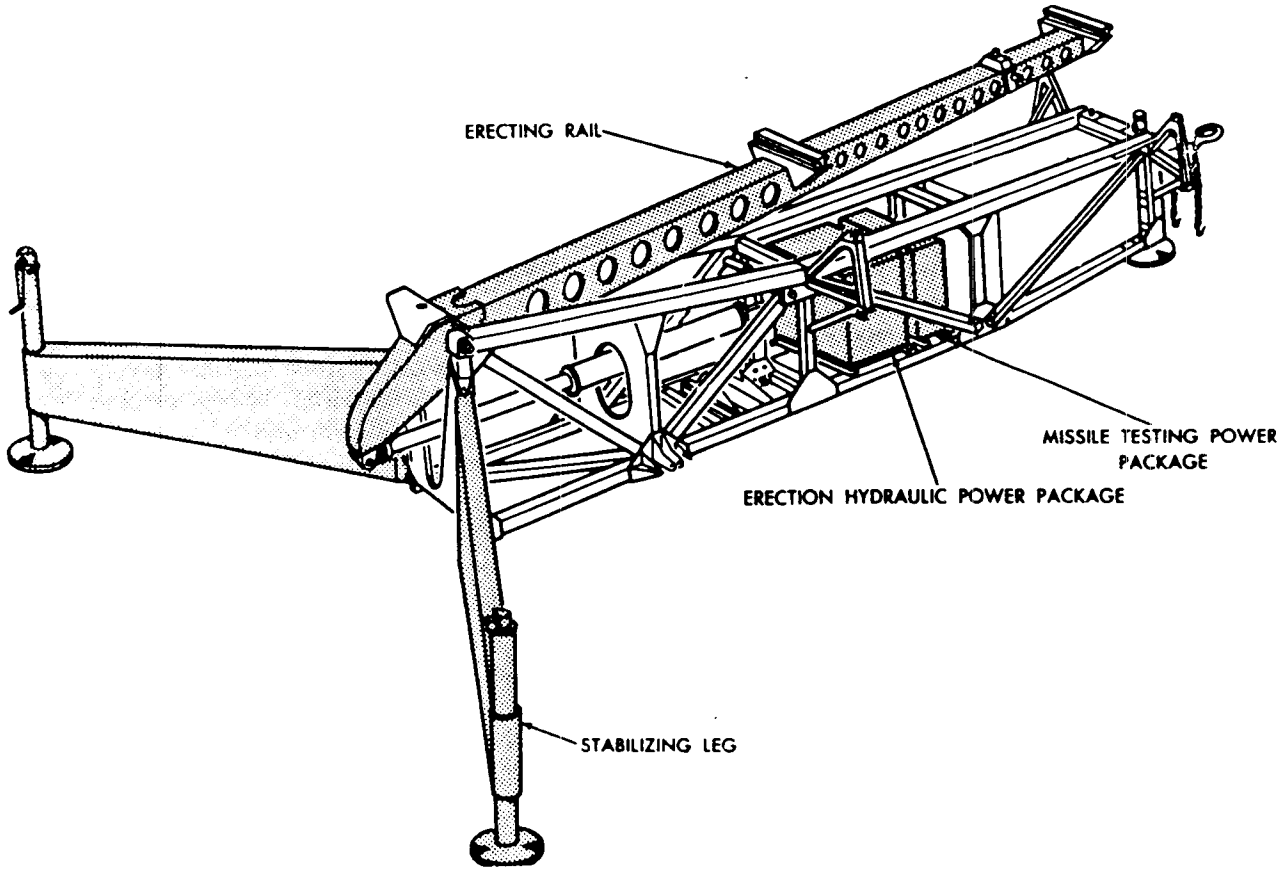


*Figure 53. Launcher.*

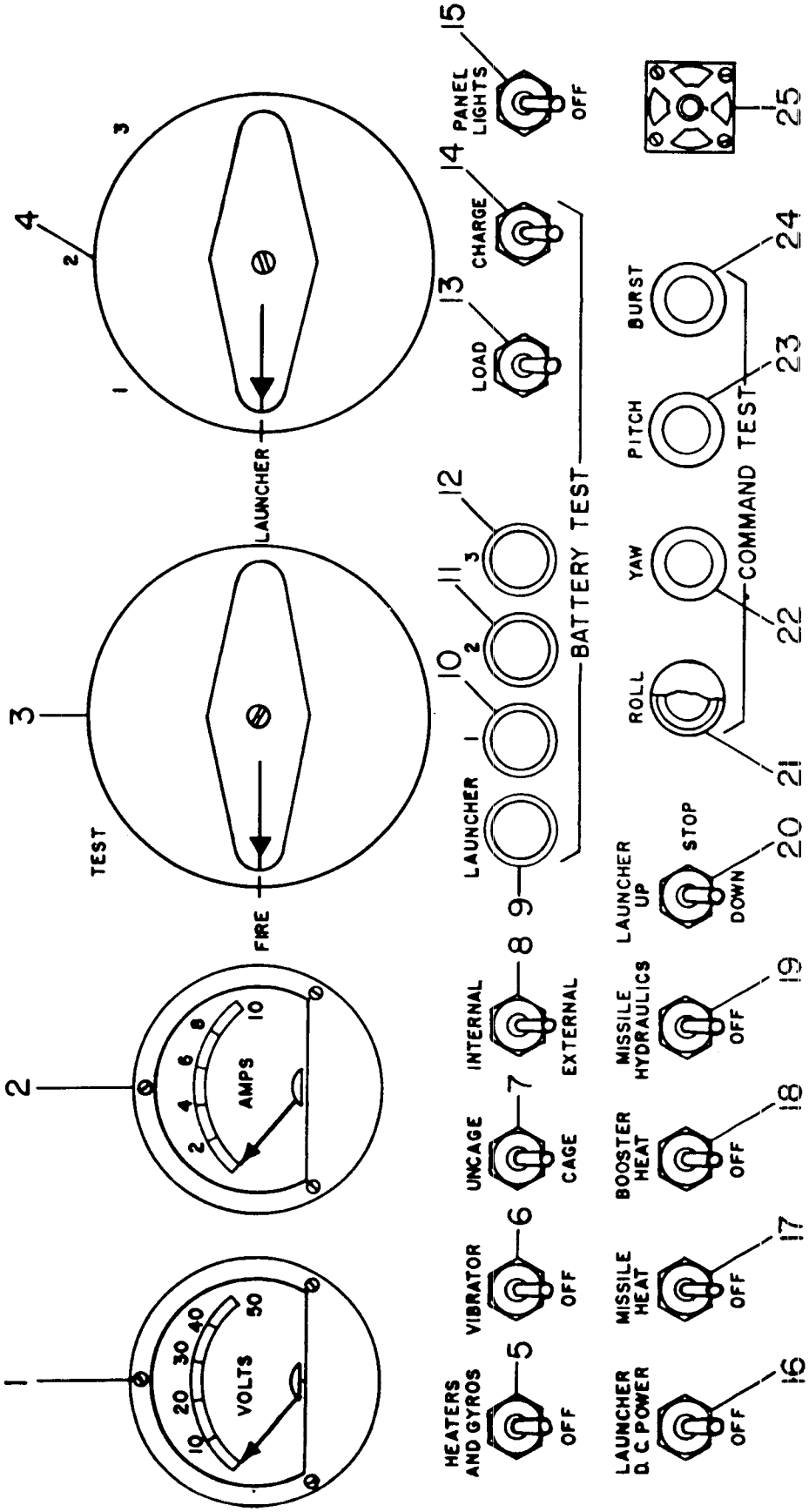


*Figure 56. Launcher operating panel.*

*Table XXXVII. Launcher Operating Panel*

| Item | Title | Type | Function |
|---|---|---|---|
| 1 | VOLTS | Voltmeter | Measures either external dc voltage or voltage of battery in missile, depending on whether missile is receiving power from internal or external circuit. Also measures missile battery voltage in external position when LOAD switch is actuated. |
| 2 | AMPERES | Ammeter | Indicates external current (0 to 10 amperes) drawn by missile from launcher junction box 28-volt power supply, or, while CHARGE switch is positioned to CHARGE indicates battery charge current (0 to 100 milliamperes) to missile (determined by position of selector switch). |
| 3 | TEST-FIRE | 2-position rotary-type switch. | When positioned to TEST, control of launcher and missiles is with launcher operating panel. When positioned to FIRE, control is with launching section control panel. |
| 4 | Missile selector | 4-position rotary-type switch. | Determines which missile is to be tested, missile on launcher, or one at either of the three test stations. Channels control and functional signals to the missile to be tested. |
| 5 | HEATERS AND GYROS ON-OFF. | Toggle switch | When launcher operating panel controls launcher and missiles (TEST-FIRE switch in TEST position), this switch, when positioned to ON, applies external 28-volt dc power to missile guidance section filament heaters and gyros and to 60-second timer. When this switch is OFF, circuit is provided through heaters and gyros relay for charging battery in missile on launcher erecting arm, when, and only when, the erecting arm is in DOWN position. The missiles on the storage racks receive a trickle battery charge at all times. |
| 6 | VIBRATOR | Toggle switch (2-position). | When positioned to ON, after HEATERS AND GYROS switch is positioned to ON and a 60-second time delay has elapsed, applies external 28-volt dc power to vibrator unit in any one of four missiles, determined by the position of the missile selector switch. It also provides 28-volt dc power for an internal-external relay. |
| 7 | CAGE-UNCAGE | Toggle switch (2-position). | When positioned to UNCAGE, uncages missile roll gyro of designated missile after 60-second time delay has elapsed. |
| 8 | INTERNAL-EXTERNAL | Toggle switch (2-position). | Transfers missile from EXTERNAL 28-volt dc power to its own battery for INTERNAL power. To switch to INTERNAL power, the heaters and gyros switch must be ON. A 60-second time delay must elapse and then the vibrator switch turned ON. In EXTERNAL position, external 28-volt dc power supply voltage may be read. In INTERNAL position, reads missile battery voltage. |
| 9 | BATTERY TEST LAUNCHER. | Indicator light | When lit, indicates that missile on launcher is receiving battery charge. If light burns brightly or is completely out, technical maintenance may be required. *Note.* Due to the high current rating (0.15 amperes) of this No. 47 pilot lamp, an extinguished condition is not a true indication that missile battery is not receiving a charge. After the battery has been on charge for any length of time, the charge will drop from a possible 60 milliamperes to approximately 10 to 20 milliamperes. About 40 milliamperes are required to produce an appreciable glow in the No. 47 pilot lamp. |

*Table XXXVII. Launcher Operating Panel*—Continued

| Item | Title | Type | Function |
|---|---|---|---|
| 10 | BATTERY TEST. TEST position 1. | Indicator light | When lit indicates missile on test station No. 1 is receiving battery charge. See note in item 9 above. |
| 11 | BATTERY TEST. TEST position 2. | Indicator light | When lit, indicates that missile on test station No. 2 is receiving battery charge. See note in item 9 above. |
| 12 | BATTERY TEST. TEST position 3. | Indicator light | When lit, indicates that missile on test station No. 3 is receiving battery charge. See note in item 9 above. |
| 13 | BATTERY TEST LOAD | Toggle switch (spring-loaded). | With the INTERNAL-EXTERNAL switch in EXTERNAL position and this switch positioned to LOAD, an external load is applied to the missile battery to determine its adequacy under load for operational use. This switch also disconnects the missile battery from the battery float or trickle charge. This test can be performed at launcher operating panel only. |
| 14 | BATTERY CHARGE | Toggle switch (spring-loaded). | When positioned to CHARGE, ammeter is removed from missile heaters and gyros circuit, and put across a 100-milliampere shunt in battery-charger line to read charging current. Full scale will read 100 miliamperes. The missile selector switch determines the individual battery charge circuit which is being read. |
| 15 | PANEL LIGHTS ON-OFF | Toggle switch | Turns on the lights which illuminate operating panel. |
| 16 | LAUNCHER DC POWER ON-OFF. | Toggle switch | When launcher operating panel controls launcher and missiles (TEST-FIRE switch in TEST), this switch, when position to ON, applies 120-volt ac power to dc power-supply unit and makes available 28-volt dc output for missile and control relay circuits. |
| 17 | MISSILE HEAT ON-OFF | Toggle switch | When positioned to ON, provides 120-volt ac single-phase power for heating missile battery plastic blanket. Power is also provided for heating plunger in hydraulic accumulator. Missile heat can only be applied from launcher operating panel, and only when LAUNCHER DC POWER switch is positioned to OFF.<br><br>*Note.* If TEST-FIRE switch is in FIRE position, LAUNCHER POWER switch for respective launcher on section control panel must be OFF. |
| 18 | BOOSTER HEAT ON-OFF | Toggle switch | When positioned to ON, applies 208-volt, 3-phase, ac power for booster heating blanket receptacle. Booster heat can be applied from launcher operating panel only when LAUNCHER DC POWER switch is positioned to OFF. If TEST-FIRE switch is in FIRE position, LAUNCHER POWER switch for respective launcher on section operating panel must be OFF. |
| 19 | MISSILE HYDRAULICS | Toggle switch | When launcher operating panel controls launcher and missiles, this switch, when positioned to ON, supplies 208-volt, 3-phase, ac power to hydraulic pump motor in the missile-testing hydraulic power unit. |
| 20 | LAUNCHER elevation UP, DOWN, and STOP. | Toggle switch (3-position). | When launcher operating panel controls launcher and missiles, this switch controls raising and lowering the erecting arm. When switch is positioned to STOP, erecting arm is held in position. The hydraulic pump will be operational only when launcher elevation switch is in UP or DOWN position. |

*Table XXXVII. Launcher Operating Panel*—Continued

| Item | Title | Type | Function |
|---|---|---|---|
| 21 | COMMAND TEST ROLL | Pushbutton | With: (1) TEST-FIRE switch in TEST position, (2) LAUNCHER DC POWER switch in ON position, (3) launcher having been designated by launcher section panel operator, (4) HEATERS AND GYROS and VIBRATOR switches in ON position, and (5) missile hydraulic switch ON, this switch, when depressed, sends control signals to the designated missile. Missile's response to this signal is movement of its control surfaces for right roll. When switch is released controls will return to neutral. |
| 22 | COMMAND TEST YAW | Pushbutton | This switch, when depressed, sends control signals from the fin test oscillator to designated missile when the five conditions given in item 21 above exist. Missile's response to this signal is movement of its control surfaces for right climbing turn. When switch is released and launcher erecting rail is in down position, controls will return to −7°. |
| 23 | COMMAND TEST PITCH | Pushbutton | This switch, when depressed, sends control signals from the fin test oscillator to designated missile when the five conditions given in item 21 above exist. Missile's response to this signal is movement of its control surfaces for left climbing turn. When switch is released and launcher erecting rail is in down position, controls will return to −7°. |
| 24 | COMMAND TEST BURST (not included on later models). | Pushbutton | This switch, when depressed, sends a control signal from the fin test oscillator to designated missile when the five conditions listed in item 21 above exist. Missile reaction to this signal may be detected by telephone connected to telephone outlet, and heard as an audible click. |
| 25 | PHONE JACK | Receptacle | Connected to STA–2 loop which connects to switchboard in launching control trailer. When section has been selected, STA–2 is then on the technical loop. |

## 30. Underground Storage Magazine

At permanent ConUS installations, each Nike section will be normally emplaced in an underground storage magazine site (fig. 57). Each section's site contains an underground room for storing the rounds (magazine room), an elevator to carry the rounds to the surface for firing, four launcher operating panels, and four launcher-loader assemblies (fig. 58). Three of the launchers are permanently emplaced above ground. These are referred to as satellite launchers. The fourth launcher is mounted on the elevator. When the elevator is down, a missile and booster can be pushed from the storage racks in the magazine room onto the launcher on the elevator. When the elevator is raised, the missile and booster on the elevator can be pushed from the elevator launcher onto the satellite launchers. In figure 58, the elevator is shown in the almost raised position. The elevator may be raised, lowered, or stopped from the master control station in the magazine room, from the controls on the elevator, or from the launching section control panel in the personnel room. Doors are provided to close the elevator shaft opening when the elevator is down. Hydraulic power to operate the elevator and the doors is supplied by the elevator assembly power unit in the magazine room. Fresh air for personnel is provided by the air vent unit in the magazine room.

## 31. Elevator Controls

(fig. 59)

*a. Master Control Station.* The master control station is located in the magazine room on the

*d. Bumper Assembly.* The bumper assembly is mounted on the rear of the launcher base structure. This assembly is detached when the launcher is emplaced. Running and blackout stop and tail lights and reflectors are installed on the bumper assembly.

*e. Erecting Arm* (fig. 54). The hydraulically operated erecting arm erects the round on the transporting and handling rail and holds it in a near vertical position until the round is fired. It is a closed box-type structure which pivots vertically about a trunnion tube located at the aft end of the launcher base structure. It is actuated by an operating cylinder which derives its power from the hydraulic erecting power unit installed in the base of the launcher. T-section tracks are fastened transversely across the top of the erecting arm. These tracks receive the wheels of the launching and transporting rails. An automatic spring-loaded indexing pin, installed on the erecting arm, slips into a latch on the launching and transporting rail to aline the round on the erecting arm. When the launching and transporting rail is correctly positioned on the erecting arm, two locking pins on the transporting and handling rail engage two holes in the erecting arm. This holds the rail with the round attached to the erecting arm.

*f. Hydraulic Operating Cylinder.* The hydraulic operating cylinder is located in the rear area of the launcher base structure. Its function is to raise and lower the launcher erecting arm by utilizing power from the hydraulic erecting power unit. The cylinder assembly is trunnion-bolted at both ends, the piston-rod end to the lower end of the erecting arm and the cylinder end to the launcher base. A piston stroke of approximately 40 inches is required to move the erecting arm from its lowered (horizontal) position to its erected (near vertical) position. The overall length of the piston rod and operating cylinder is approximately 65 inches when the launcher erecting arm is in the raised position and 105 inches when it is in the lowered (down) position. The hydraulic operating cylinder operates on 3,000 psi on the up cycle and 1,500 psi on the down cycle. The assembly incorporates an internal lock to hold the arm in the firing (raised) position and an adjustment to permit the angle of elevation to be set at any increment between 85° and 90°.

*g. Launcher Erecting Hydraulic Power Unit.* The launcher erecting hydraulic power unit sup-

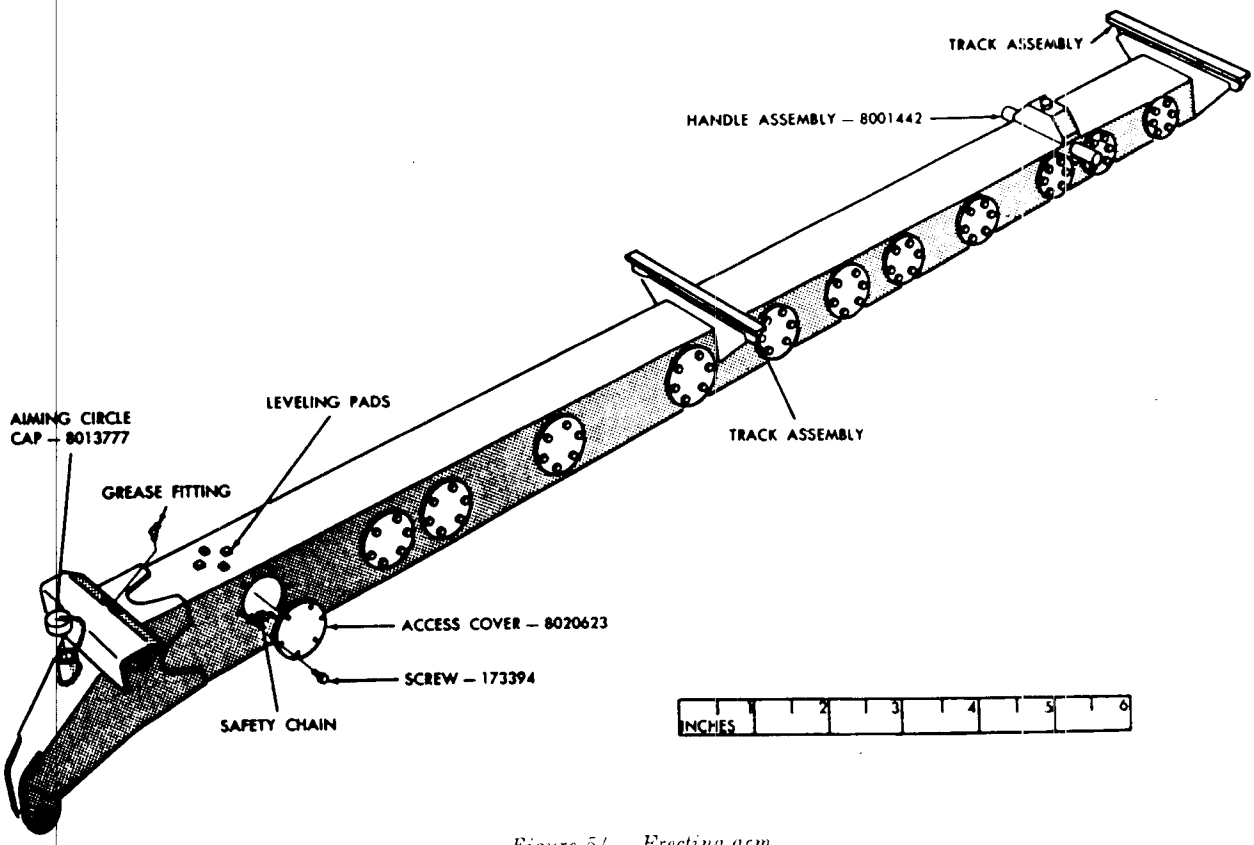


*Figure 54. Erecting arm.*

plies the necessary hydraulic pressure to actuate the hydraulic operating cylinder. It is located in the launcher base structure just forward of the operating cylinder. Flexible hoses carry the hydraulic fluid between the power unit and the operating cylinder.

*h. Missile Testing Hydraulic Power Unit.* This hydraulic power unit provides external hydraulic pressure for testing the missile hydraulic system and the reaction of the control surfaces. It is located on the launcher base structure between the launcher erecting hydraulic power unit and the launcher electrical junction box. Hydraulic lines of steel tubing and flexible hoses carry hydraulic fluid from the hydraulic unit to the

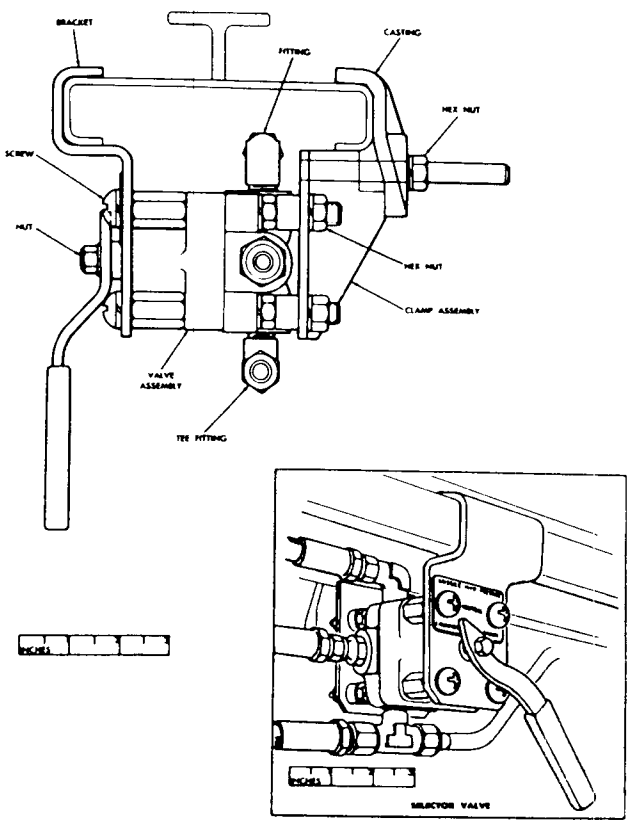


*Figure 55. Hydraulic selector valve.*

missile on the erecting arm and to each of the missiles at the three test stations on the loading racks. The position of the hydraulic selector valve (fig. 55) determines whether the hydraulic power is channeled to the missile on the launcher or to the missiles at the test stations.

*i. Electrical Junction Box.* The electrical junction box, located in the forward end of the launcher base structure, is approximately 30 inches long, 16 inches wide, 22 inches high at the rear end, and 19 inches high at the forward end. This junction box, which is connected to the section power cabinet by two 125-foot cables, distributes electric power to the various launcher-loader components, to the booster conditioning equipment, to the missile conditioning equipment, and to the 28-volt dc power supply. It also contains the 28-volt power supply and a blower for cooling the interior. The 28-volt power supply is required for certain relays on the launcher operating panel and for the guidance section assembly on the missile.

*j. Launcher Operating Panel* (fig. 56). The launcher operating panel contains the necessary meters, indicator lights, and switches to test the missiles on the launcher-loader assembly. The panel is a sheet metal container approximately 17 inches high, 17 inches long, and 8 inches wide. When emplaced, it is attached to the forward (pintle) side of the loading rack and about three feet to the left of the launcher base. In transit, it is attached to the left side of the launcher base structure. The launcher operating panel is connected by cables to the missile rf test set, to the electrical junction box at each missile test station on the loading racks through connections at the launcher junction box, to the erecting arm, the hydraulic power unit, and to the section operating and power cabinet. Provisions are included for connecting the launching area portable checkout set. Table XXXVII shows the controls and indicators and the purpose of each.

*k. Combined Launcher Hydraulic Power Pack.* On launcher-loader assemblies 1009 and subsequent, the launcher erecting hydraulic power unit and the missile testing hydraulic power unit have been replaced with a single hydraulic power package. This one unit supplies hydraulic power for operating (raising and lowering) the erecting arm and for testing missiles on the launcher-loader assembly. This combined hydraulic power unit is mounted on the base of the launcher between the hydraulic operating cylinder and the launcher electrical junction box.

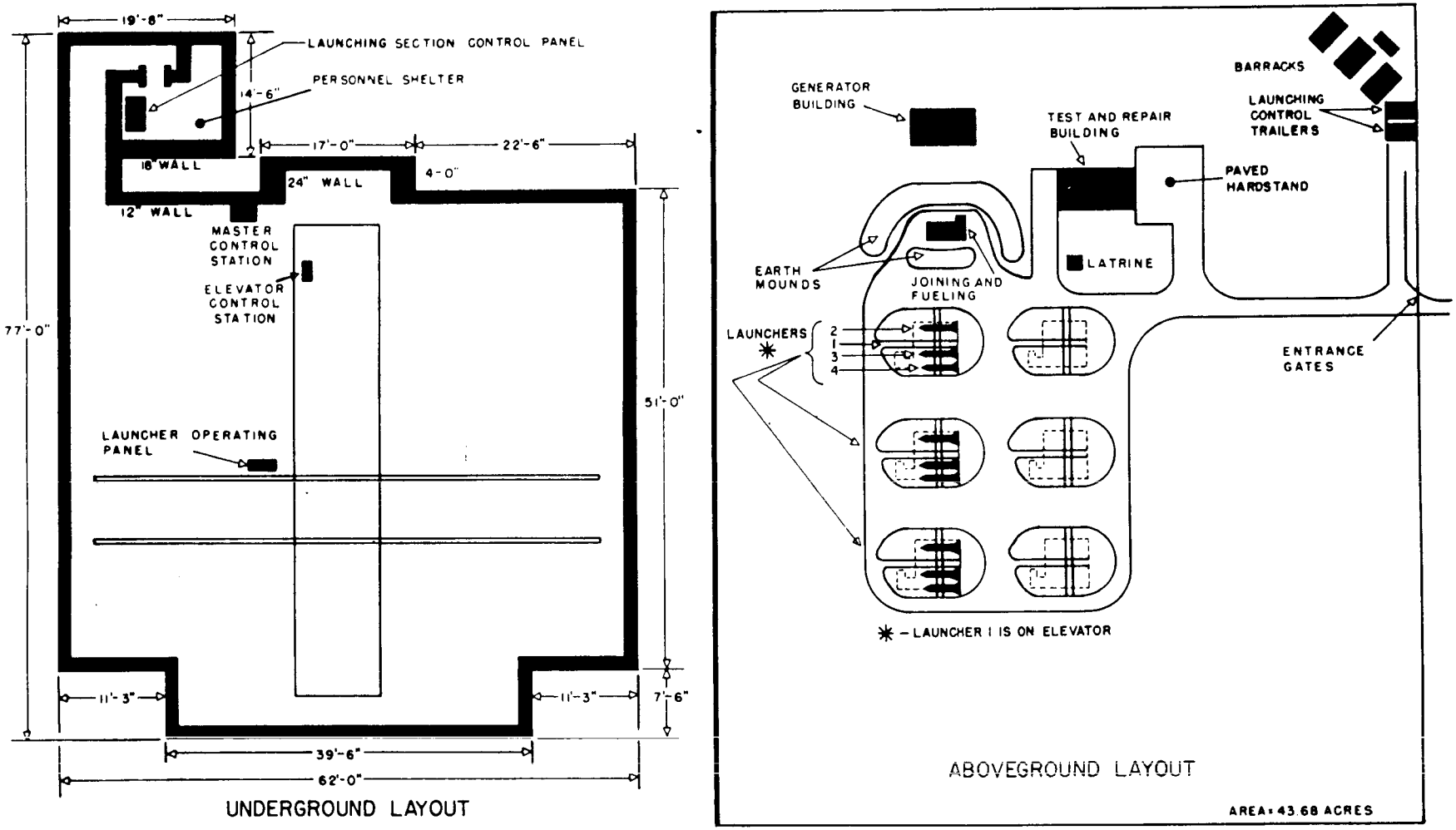


*Figure 57. Underground magazine type launching area.*

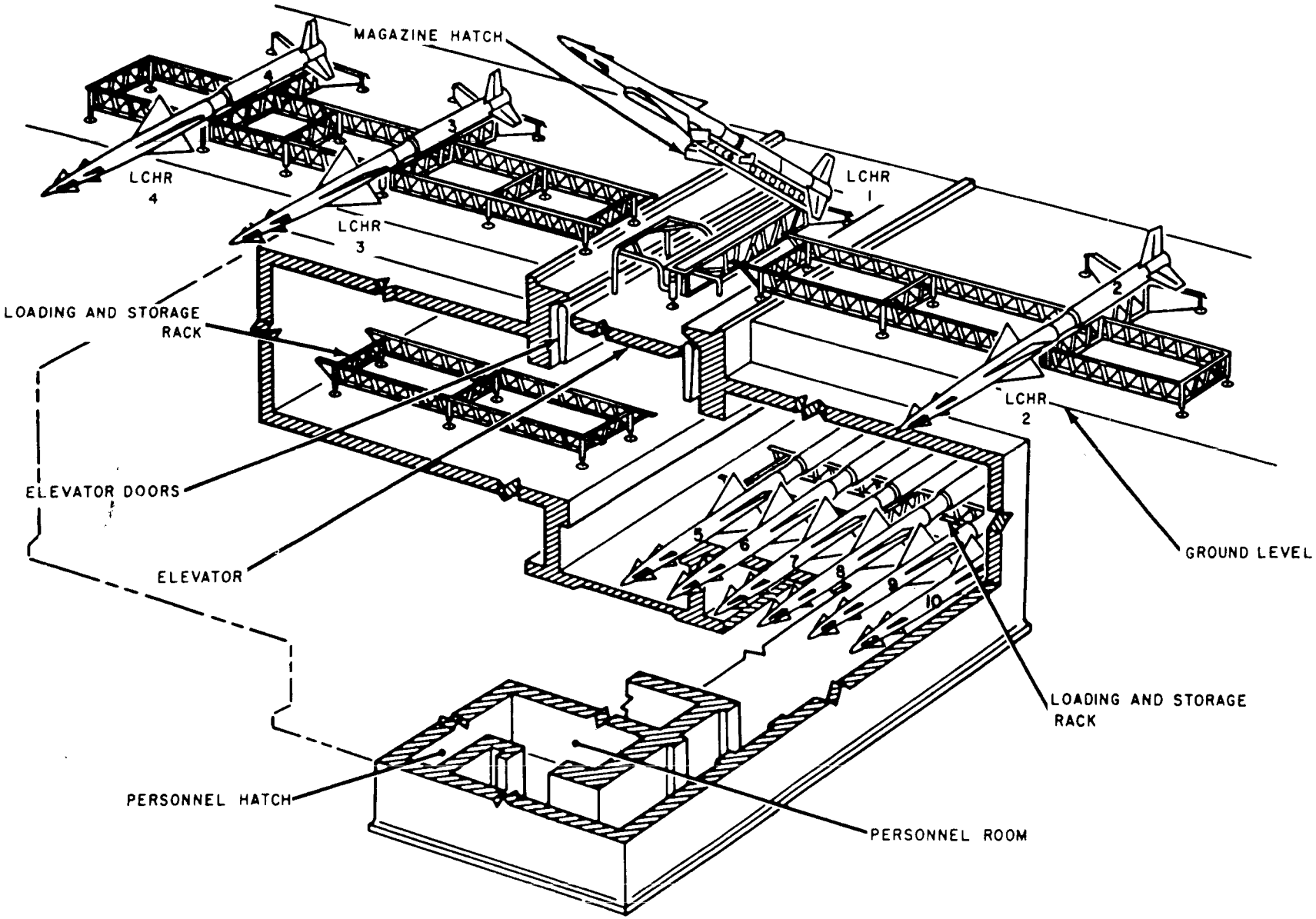


*Figure 58. Cutaway view of underground magazine.*

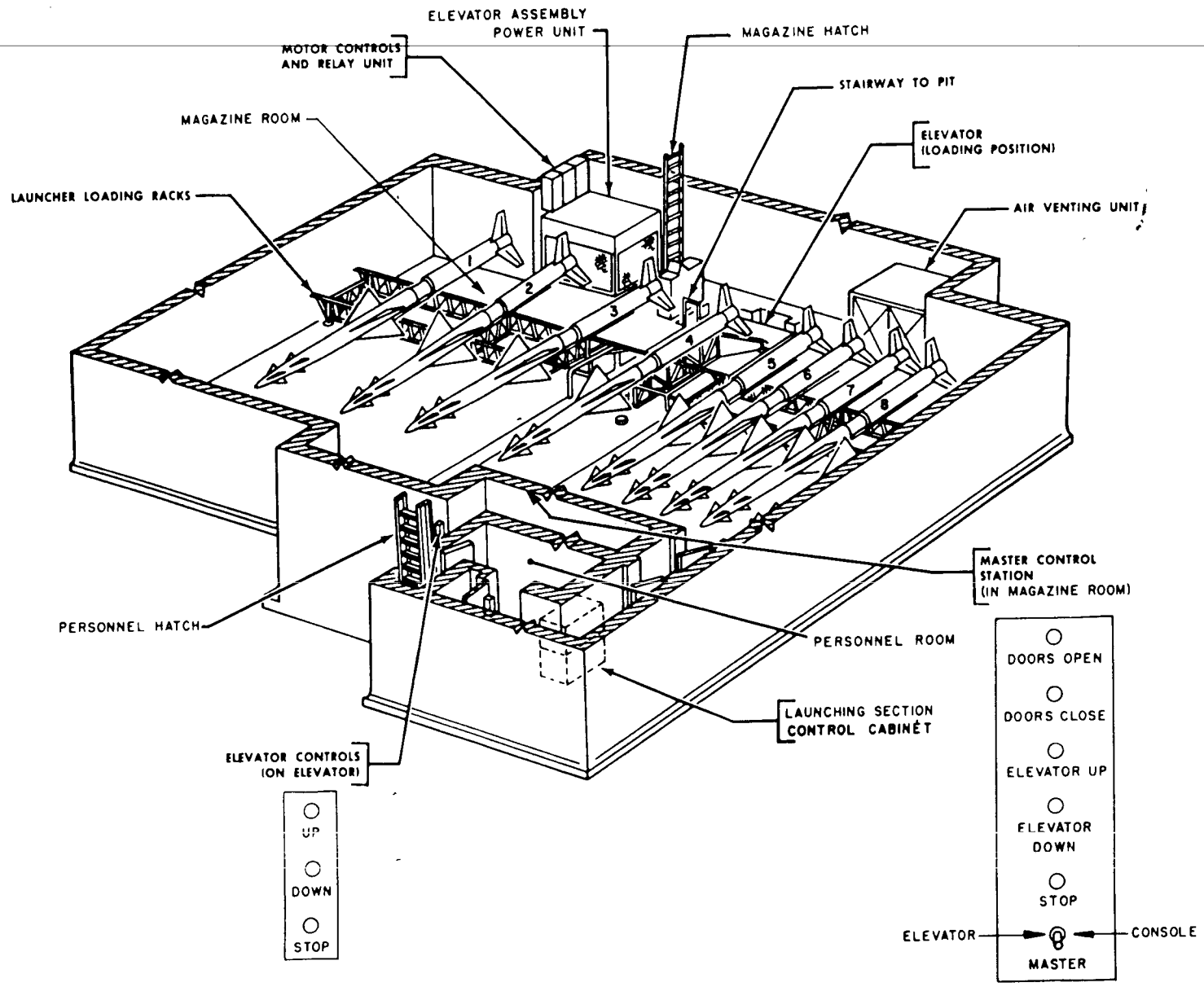


*Figure 59. Elevator controls, underground magazine.*

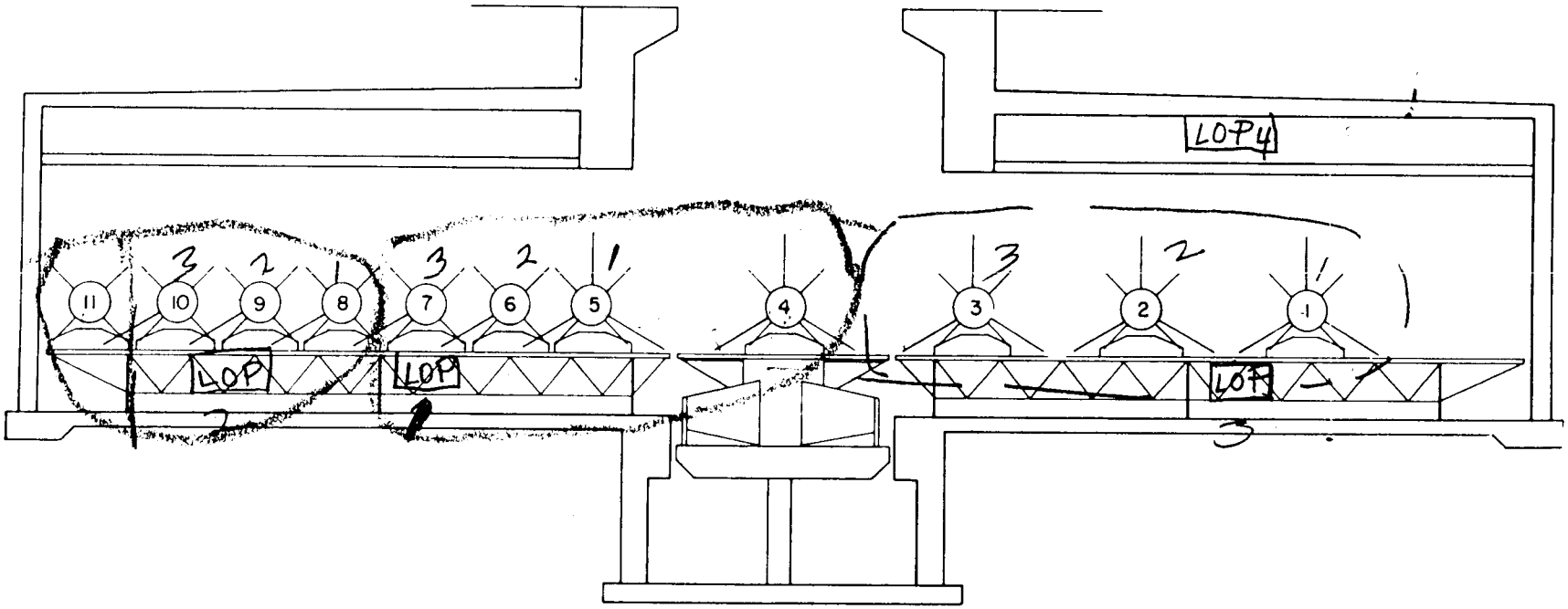


*Figure 60. Layout of missiles in magazine room.*

bulkhead next to the forward end of the missiles. It contains the following 6 controls:

(1) Selector switch. The lower of the 6 controls is the master control station selector switch. When this control is turned to MASTER, the elevator is controlled from the master control station. In the ELEVATOR position, control is from the elevator. In CONSOLE, the elevator is controlled by the LAUNCHER ELEVATION switch for launcher number 1 on the launching section control panel in the personnel room. In the CONSOLE position, when the LAUNCHER ELEVATION switch is positioned to UP, the elevator goes up and the erecting arm on the launcher erects simultaneously. When the LAUNCHER ELEVATION switch is set to STOP or DOWN, the erecting arm on the launcher and the elevator stop or lower simultaneously.

(2) Elevator up and elevator down. These two pushbuttons raise or lower the elevator when the master control station selector switch is in the MASTER position.

(3) Stop. The STOP pushbutton, when depressed, stops the elevator. This control is connected in series with the stop pushbutton on the controls located on the elevator, and, therefore, it is operative when the selector switch is in either MASTER or ELEVATOR.

(4) Doors open and doors close. These two pushbuttons open and close the doors at the top of the elevator shaft.

*b. Elevator Controls (on the elevator).* These three controls, located on the elevator, make it possible for the elevator operator to raise, lower, or stop the elevator without being at the master control station. The UP and DOWN controls are operative only when the master control station selector switch is in the ELEVATOR position. The STOP pushbutton is operative when the selector switch is in either MASTER or ELEVATOR.

*c. Bridge Locks.* Four interlocks are incorporated into the elevator system to insure that the elevator is properly locked in the raised position prior to firing. Indicator lights in the personnel room indicate when the elevator is in the locked-up position.

## 32. Launcher Operating Panels

There are four launcher operating panels at each section's underground magazine site. Three of the LOP's are located in the magazine room. The fourth is aboveground at launcher number 4.

## 33. Test Stations

(fig. 60)

Routine and periodic tests may be completed on the missiles while stored in the magazine. Table XXXVIII shows the test station number for each stored missile, the launcher operating panel to be used in making the tests, and the source of hydraulic power. Missile No. 4 is on the elevator. The missiles are numbered from right to left, looking from the nose toward the booster.

*Table XXXVIII. Missile and Test Station Numbering*

| Missile No | 1 | 2 | 3 | *4 | 5 | 6 | 7 | 8 | 9 | 10 |
|---|---|---|---|---|---|---|---|---|---|---|
| Test station No | 11 | 10 | 9 | ELEVATOR | 7 | 6 | 5 | 4 | 3 | 2 |
| Controlled by LOP No | 3 | 3 | 3 | | 1 | 1 | 1 | 2 | 2 | 2 |
| Hydraulic fluid for test purposes from launcher No | 3 | 3 | 3 | | 2 | 2 | 2 | 2 | 2 | 2 |

* Use LOP No. 1 to test missile on elevator.

# CHAPTER 3

# HANDLING, SERVICING, AND TEST EQUIPMENT

## Section I. MISSILE AND BOOSTER

### 34. Shipping Containers

*a. Missile.* The missile, less control fins, main fins, and ailerons, is shipped in a hermetically sealed, pressurized (approx. 5 psi), reusable, steel container. Two types of containers are currently being used—a two-piece type (fig. 61) and an end opening type (fig. 62). The two-piece container has a separable top and bottom section. The top and bottom sections are bolted together over a rubber gasket to form an airtight seal. Four tapered index pins facilitate proper alinement of the top and bottom sections. The lower part of the container contains a shock-rubber mounting assembly for supporting the missile during transit. Skids are fastened to the bottom of the container to facilitate moving. A steel tube designed to hold a missile log book is located in the forward end of the lower portion of the container. In some instances, the log book is taped to the side of the missile. The lower part also contains a dessicant basket at each end to absorb excess moisture. A humidity indicator is located in the upper half to indicate whether or not excessive moisture is present. One end of the upper half of the container has a steel receptacle on the outside. This receptacle houses an automotive type pressurization valve, and a pressure relief valve to prevent overpressurization. A sealed window makes it possible to visually inspect the color of the humidity indicator without opening the container. Access to this receptacle is gained by removing a protective cover plate. The two valves and the window are mounted under the cover plate on a steel plate which is removed from the outside of the container after it has been completely depressurized. Two lifting eyes located on top of the container facilitate handling. The end-opening type is similar to the two-piece type, except that the top and bottom sections are welded together and access to the missile is gained by removing the ends. The aft end is removed to take the missile out of the container. The forward end may be removed to make checks with the missile rf test set without completely removing the missile from the container. The end-opening type container has a cradle for mounting the missile during transit. This cradle is mounted on rails which makes it possible to slide the missile far enough out of the container to attach the joining hoist (for missile removal) or the test equipment (for testing without entirely removing the missile from the container).

*b. Booster* (fig. 63). The booster will be shipped in a container similar to the two-piece missile container or in a wooden container. Boosters received in wooden containers will have the thrust structure attached. The sides and ends are secured to the bottom of the container by lag screws and 4 metal bands. In uncrating, the screws and bands are removed and the top, sides, and ends lifted up to give access to the booster. The booster igniter is stored in a receptacle in the forward end of the wooden container.

*c. Fin containers.* The missile control fins, main fins, ailerons, booster fins, and accessories are shipped in flat wooden containers.

*d. Thrust Fitting.* The booster thrust fitting, when packaged separately, is shipped in a separate wooden box. The igniter is packaged separately, in a metal can. The thrust fitting will be attached to the booster when the wooden shipping container is used.

*e. Arming Mechanisms.* The arming mechanisms are packaged with one mechanism in a waterproof envelope packed in a cardboard carton with twenty-five cartons per wooden case.

*f. Batteries.* Missile batteries are packed in a wooden box, with either two or four batteries per box. An ammunition type box is used for issuing.

*g. Warhead Accessory Kit.* Each warhead accessory kit, consisting of two initiator assemblies and one detonating cord assembly, is packaged in one wooden box. In some instances the initiator will be installed in the warhead when shipped.

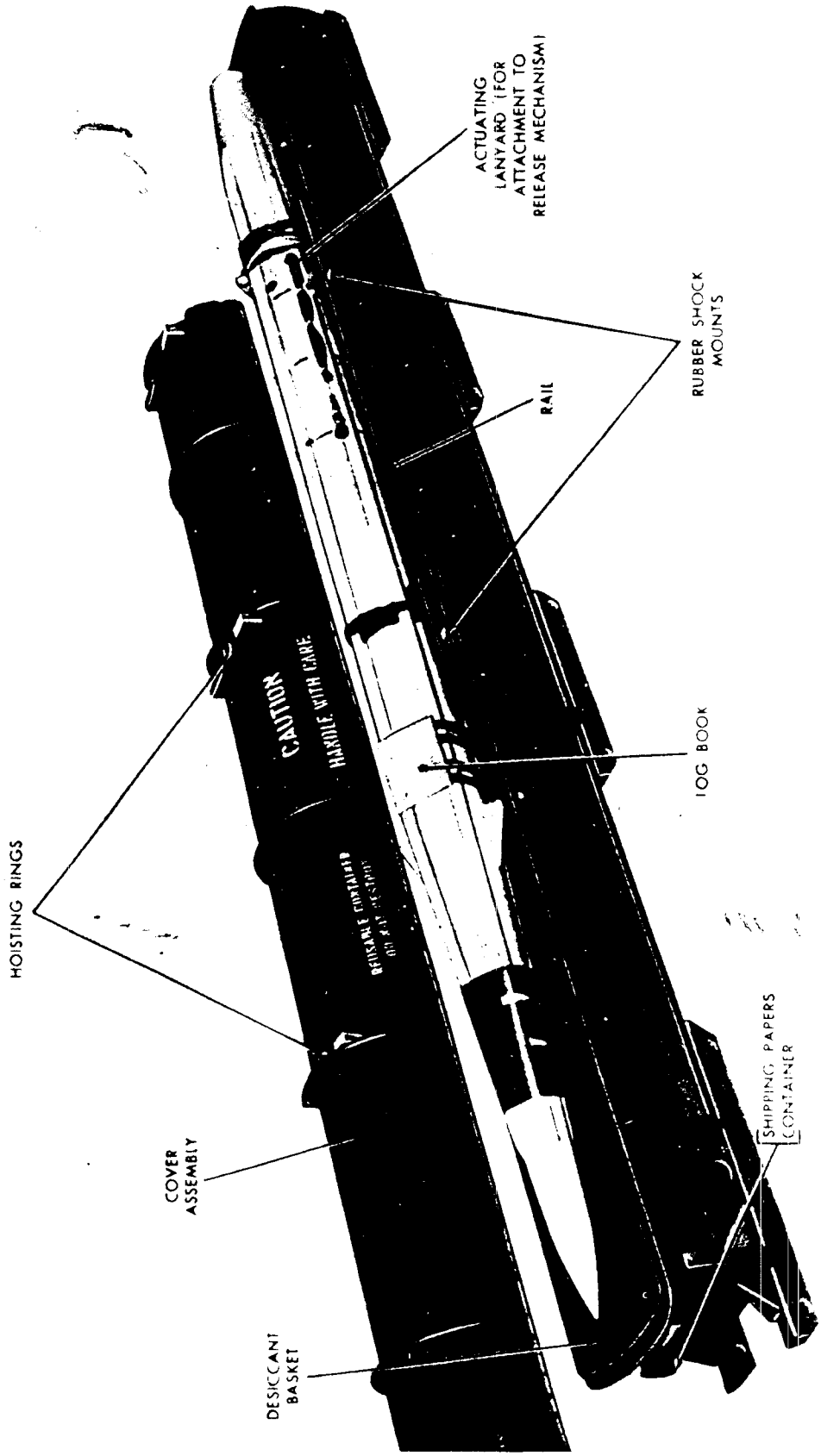


*Figure 61. Two-piece missile container.*

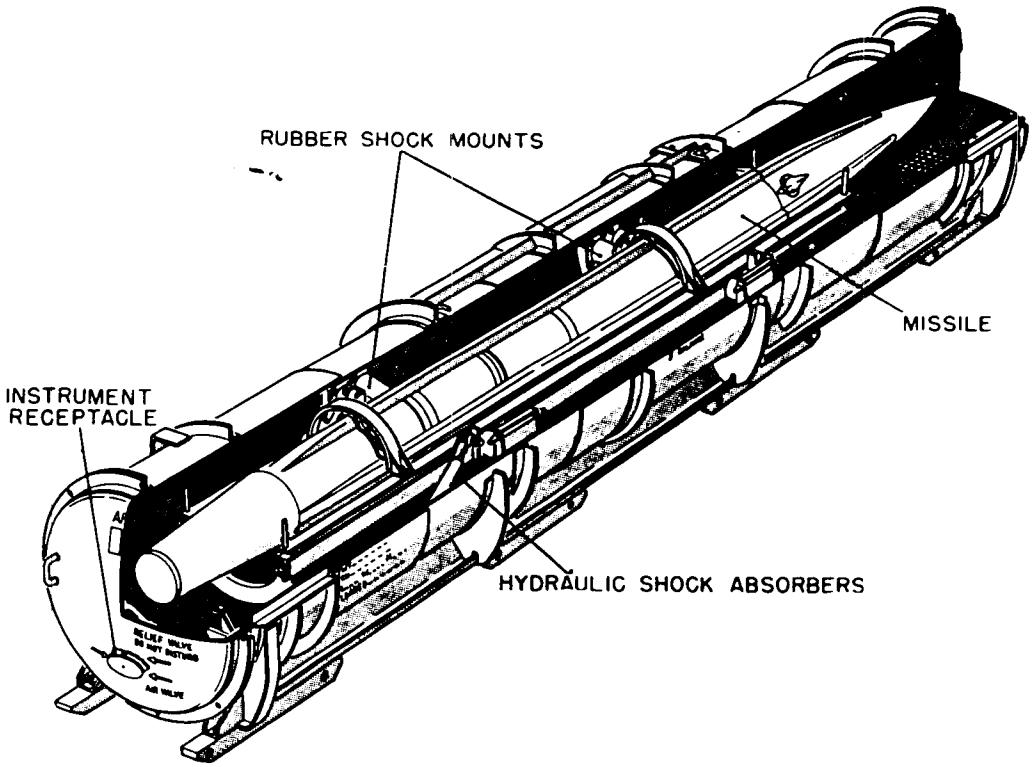


*Figure 62. End-opening missile container.*

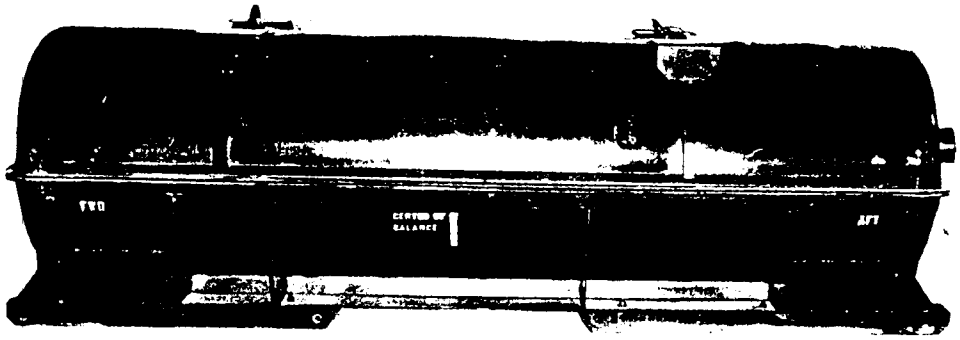

*Figure 63. Metal booster container.*

*h. Starting Mix.*

(1) Analine-alcohol starting mix is packaged in a wooden box with four bottles per box. Each bottle has enough starting mix for one missile.

(2) UDMH starting mix will be received in an aluminum container, packed four to a carton. Each aluminum container contains the required amount of UDMH to service one missile. Packed with each carton of four aluminum containers is one transfer tube assembly.

*i. Acid.* Inhibited red fuming nitric acid will be received in reusable acid resisting drums. Each drum contains enough acid for one missile.

*j. Fuel.* Fuel will be received in reusable 55-gallon drums.

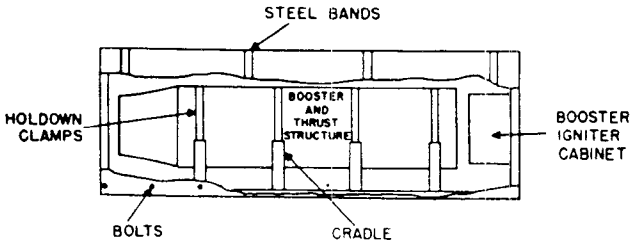


*Figure 64. Wooden booster container.*

*k. Warheads.* The nose warheads are packaged in a wooden box with two per box. The center and aft warheads are packaged in wooden boxes, one per box.

## 35. Missile Dolly
(fig. 65)

The missile dolly is used to support, transport, and correctly position the missile during assembly, test, and pressurization. The dolly is a welded steel structure approximately 10 feet long, 46 inches wide, 36 inches high, and weighs approximately 315 pounds. The dolly is mounted on four swivel casters for easier movement. Lock pins are provided to prevent swiveling of the casters when desired. The missile has the handling rings (par. 45 below) attached when it is mounted on the missile dolly. The handling rings ride on four rollers on the dolly, making it possible to rotate the missile about its longitudinal axis (roll) during missile tests. Index markers on two of the rollers, in conjunction with markers on the handling rings, make it possible to rotate the missile to a desired test position. A hand-operated pivot-jack in the center of the dolly can be lowered to the floor to take the weight off the casters and thus allow the missile to be rotated around its perpendicular (yaw) axis. Later models of the dolly do not have the center pivot-jack. A detachable drawbar is provided for manual towing if necessary. The drawbar attaches to lugs on the dolly and is secured by lock-pins.

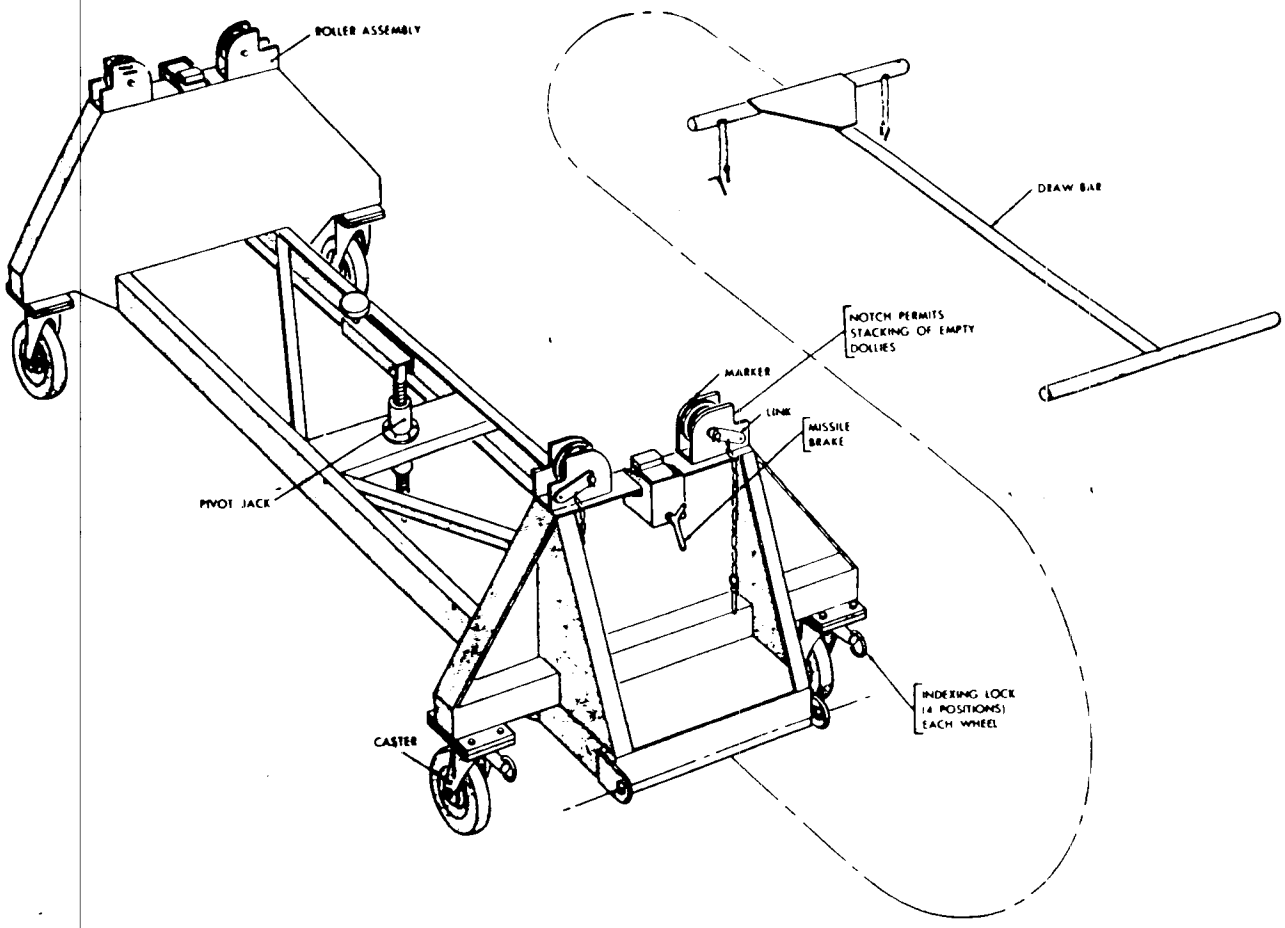


*Figure 65. Missile dolly.*

## 36. Booster Dolly

(fig. 66)

The booster dolly is used for supporting and transporting the booster in the assembly area during inspection and assembly. It has four caster wheels. The front two casters are swiveled. The rear two are fixed or adjustable, depending on the model received. The dolly is approximately 118 inches long, 47 inches wide, 34 inches high, and weighs approximately 288 pounds.

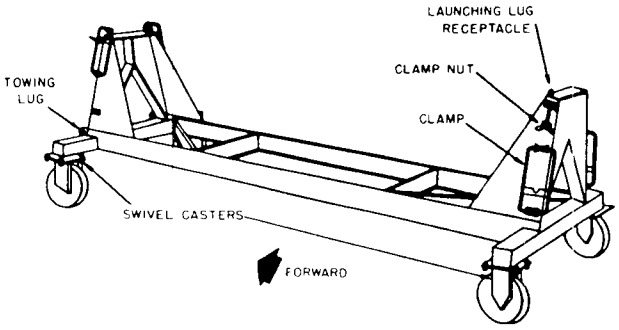


*Figure 66. Booster dolly.*

## 37. Guidance Section Dolly

(fig. 67)

This dolly is used to support the guidance and control section of the missile when it is separated from the main missile body. It has four casters mounted on the ends of four outriggers. The casters may be raised or lowered to level the dolly. This dolly is not used during normal assembly and test procedures since the missile is received with the guidance section joined to the missile body section. This dolly is approximately 68 inches long, 48 inches wide, 53 inches high, and weighs approximately 330 pounds.

## 38. Joining Hoist (A-Frame)

(fig. 68.)

This hoist is a welded steel A-frame with a hand-operated winch and a flexible wire cable with a swivel hook. It is designed to be used in

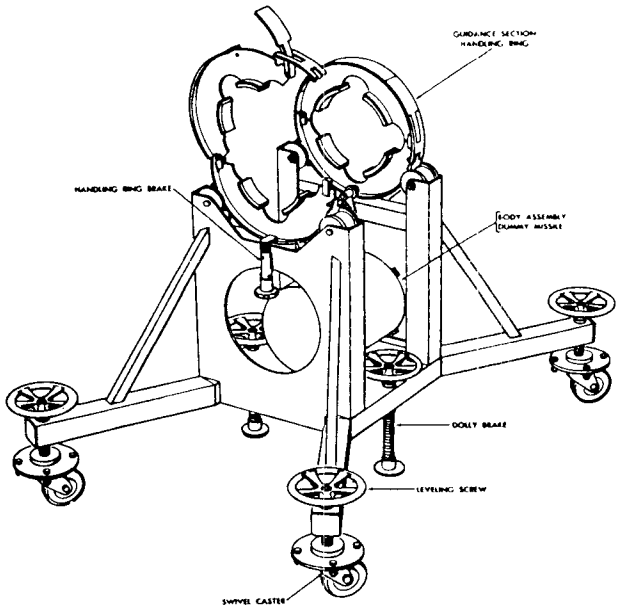


*Figure 67. Guidance section dolly.*

joining the missile to the booster on the transporting and handling rail. It may also be used as a general purpose hoist. The hoist has a beam width of approximately 130 inches, measures 110 inches from the front to rear of the frames, and is 132 inches high. The frame weighs approximately 600 pounds and the winch 100 pounds. Caster wheels facilitate moving the hoist to the desired area. Two foot-operated truck-locks are provided to make it possible to make the A-frame immovable when desired. The two end frames can be located at alternate positions (five or ten feet apart) on the cross beam. In the wide position, the hoist has a 1,500-pound rated capacity. In the narrow position the hoist is rated at 2,000 pounds.

## 39. Mobile Crane

Mobile power-cranes are provided to facilitate lifting and moving heavy components. See TOE 44-446 and 447 for exact type authorized.

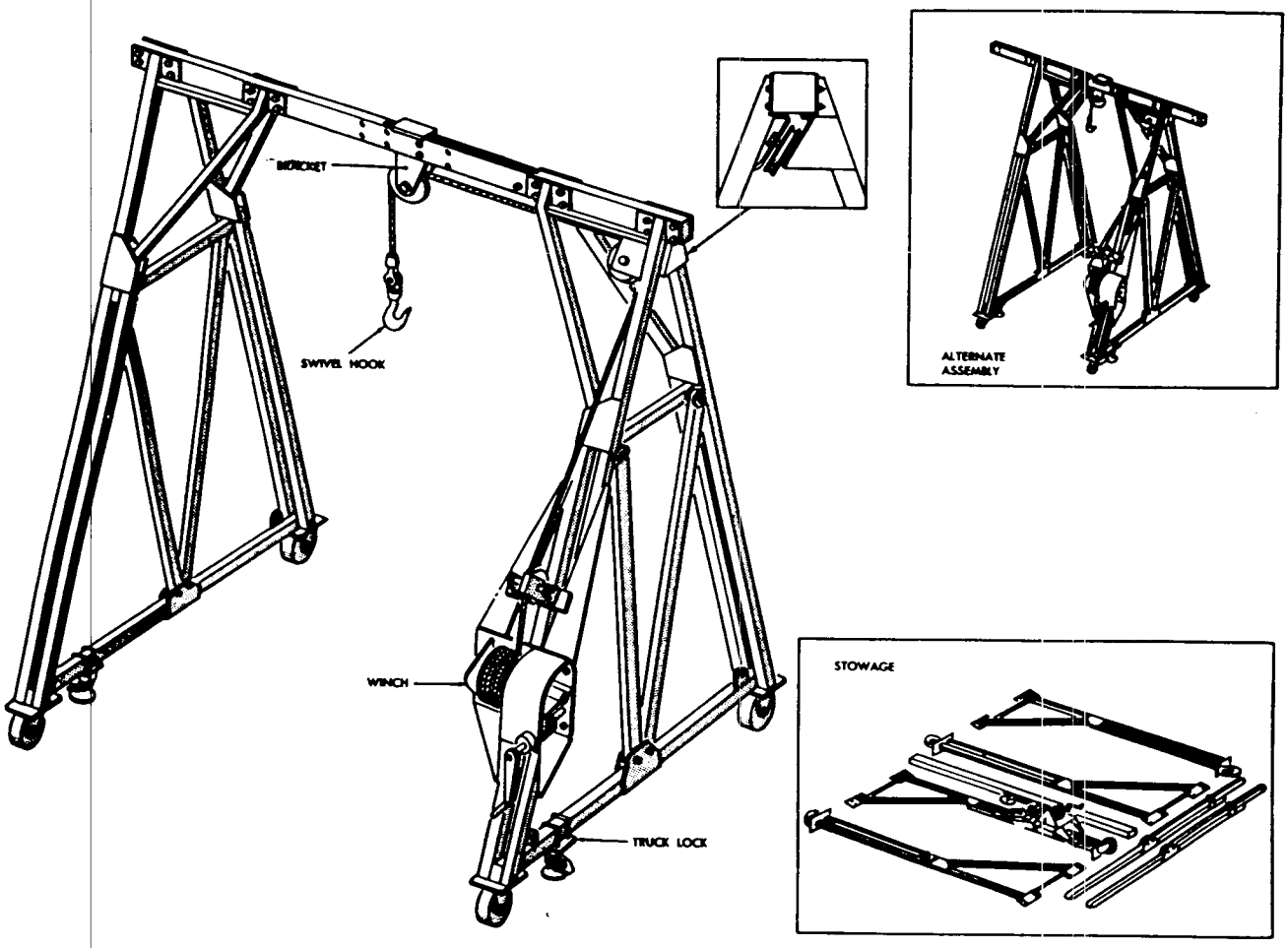


*Figure 68. Joining hoist.*

## 40. Transporting and Handling Rail

(fig. 69)

The transporting and handling rail supports the joined missile and booster during propellant and warhead servicing on the transporter-trailer, transporting to the launching area, on the launcher-loader assembly, and the launcher erecting arm. The rail also serves as a mechanical guide for the round when fired. It is approximately 22 feet long, 10 inches wide, and weighs approximately 820 pounds. The rail consists of a top plate bolted to a welded channel structure supported by four outriggers. The outriggers span approximately 41 inches. Each outrigger has one 5-inch wheel on each end and is so designed that the rail can be rolled sideways on the transporter trailer, the storage racks, and the launcher-loader assembly. The rail is centered and secured on the transporter trailer, the storage racks, the launcher-loader, and the launcher erecting arm by locking pins or followers which are cranked down into centering holes by the rail forward and aft cranks. When the shoulders on the locking pins or followers engage the tracks, the rail assembly is raised up until hooks on the outriggers lock tightly against the underside of the tracks. A front support yoke assembly mounted at the forward end of the rail, and two adjustable stops, mounted at the rear of the rail, prevent forward and aft movement of the round during transportation and on the launcher-loader assembly. The locking pin in the front support yoke is removed prior to elevating the round for

firing. The stops at the aft end of the rail then prevent the erected round from moving backward. The support yoke on the forward end of the rail is automatically retracted when the round is launched. Electrical wiring and hydraulic piping are built in as an integral part of the transporting and handling rail. These are manually connected between the missile and the launcher-loader prior to firing by means of the hydraulic ground power plug and the electrical ground power plug. These plugs are automatically removed as the round leaves the launcher.

## 41. Storage Rack

(fig. 70)

This rack is a raised track structure used to support the joined missile and booster. The wheels on the outriggers on the transporting and handling rail ride on the tracks. The rack assembly is made up of detachable end and side trusses supported on adjustable jacks. Each jack has a float assembly attached to the base for stability. The float assemblies are held in place on the ground by stakes. Trackage of any desired length can be obtained by adding ad-

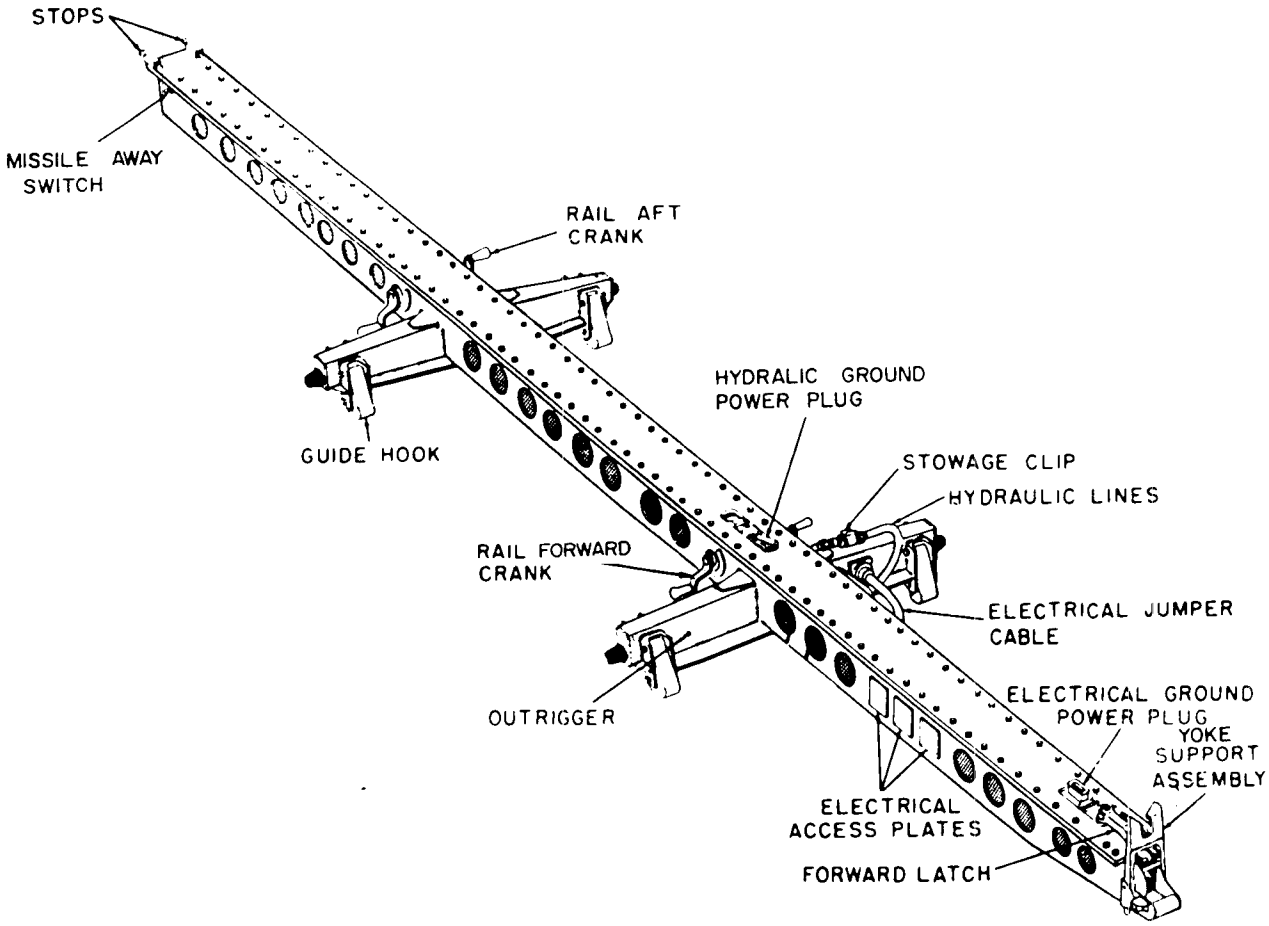


*Figure 69. Transporting and handling rail.*

ditional side and end trusses. Hinged safety flag or rail stops and holes for the transporting and handling rail locking pins or followers are located along the tracks for securing the rails at the desired intervals. Each side truss is approximately 123 inches long, 18 inches high, and weighs approximately 134 pounds. Each end truss is approximately 84 inches long, 18 inches high, and weighs approximately 160 pounds.

## 42. Missile Hoist Beam

(fig. 71)

The missile hoist beam consists of a lifting beam (with two lift points) and four hoist-link assemblies (two at each end) which attach to the missile handling rings. It is used in conjunction with the mobile crane or joining hoist to lift the missile. The beam is approximately 92 inches long, 2 inches wide, varies in height from 2 inches at the ends to 7 inches at the widest point, and weighs approximately 60 pounds. Steel plates welded on opposite sides of the beam provide two lifting points. One is the lift point for the complete missile, the other for the main body section of the missile only. The lift points and the forward end of the hoist beam are clearly marked on the beam. Two hoist-link assemblies are attached to each end of the beam. The link assemblies are used

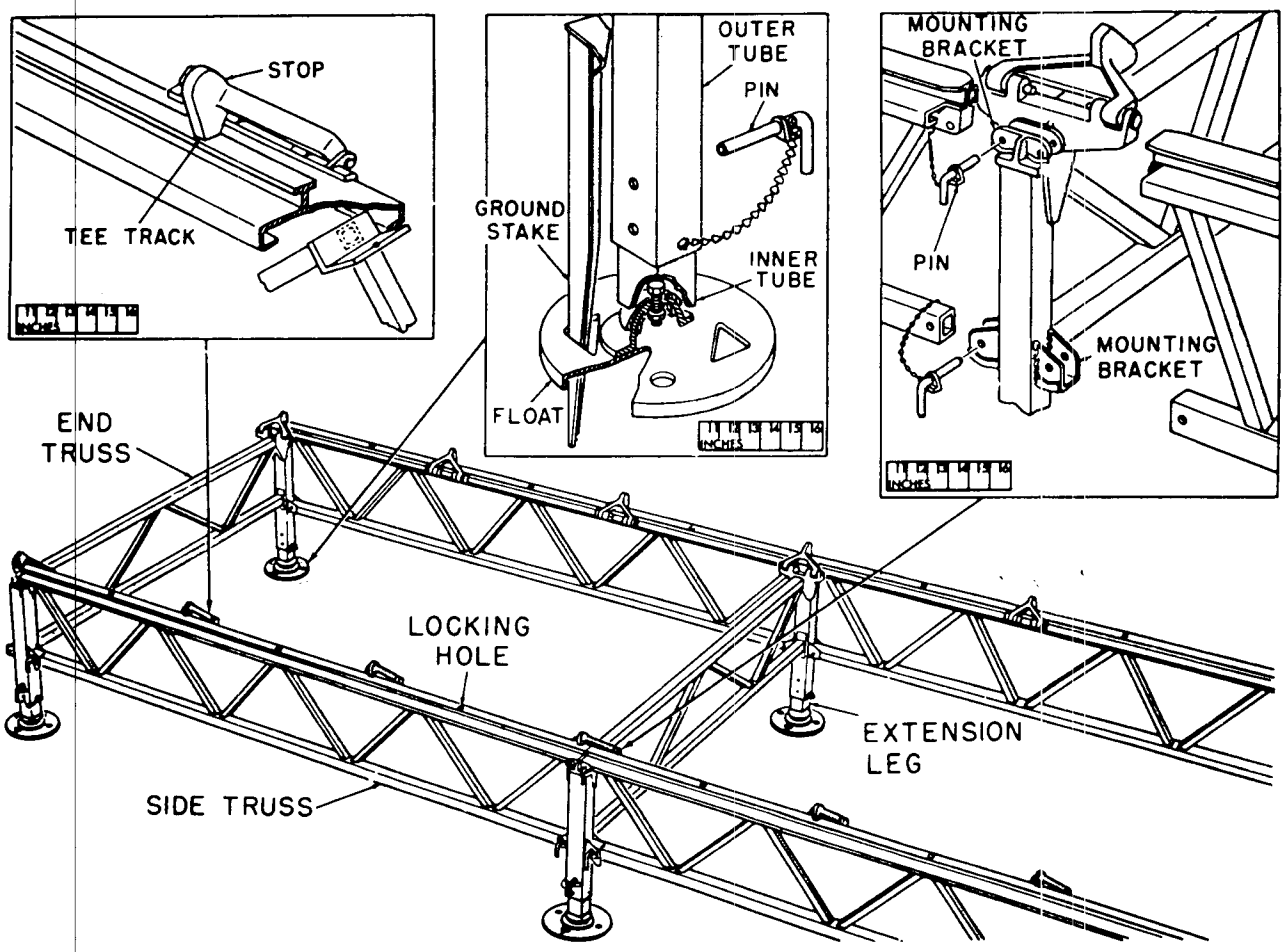


*Figure 70. Storage rack.*

to attach the beam to the missile handling rings. Four safety pins (two at each end) secure the link assemblies to the missile handling rings.

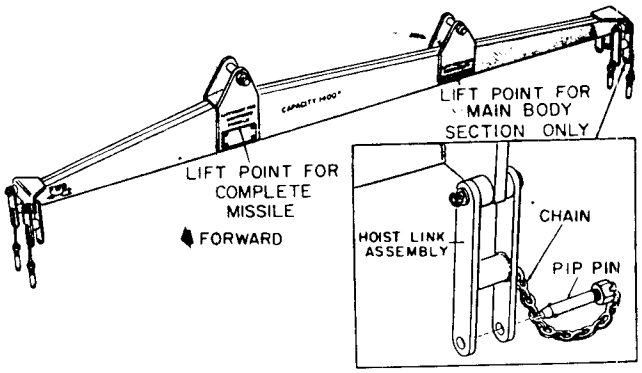


*Figure 71. Missile hoist beam.*

## 43. Booster Hoist Beam

(fig. 72)

This beam, in conjunction with the mobile crane or joining hoist, is used to lift the booster. This beam consists of a beam with one lift point and two removable sling assemblies designed to fit around the booster. In use, the forward sling is passed around the booster body just aft of the booster head and the rear sling just forward of the booster shroud. Each end of the slings is fastened to the beam with a pin secured by a safety pin. The booster hoist beam is approximately 98 inches long, 5 inches wide, 1 inch deep, and weighs approximately 60 pounds. Its rated capacity is 1,400 pounds. The aft end of the beam is marked BOOSTER TAIL.

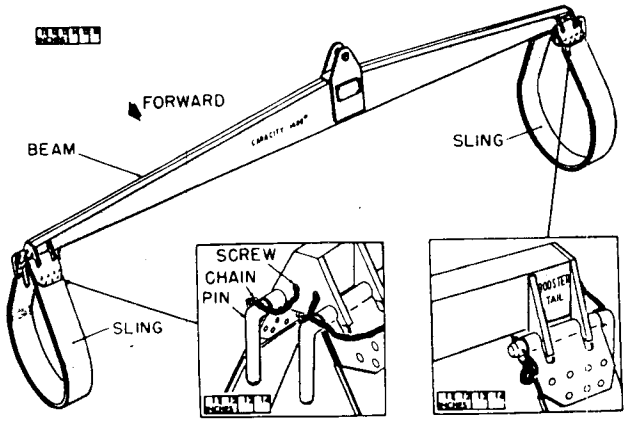


*Figure 72. Booster hoist beam.*

## 44. Warhead Handling Yoke

(fig. 73)

The warhead handling yoke is used to lift the center and aft warheads. The yoke consists of a beam with a center lifting eye and a hook-arm pivoted from each end. Each hook arm has a pivoting guard which prevents the hook arm from disengaging when lifting the warhead. Two safety pins, attached by chains to the beam, hold the guards in the locked position. The yoke may be lifted with a crane. If a crane is not available, two men can manually lift the warheads with the handling yoke. The warhead-handling yoke is approximately 22 inches long.

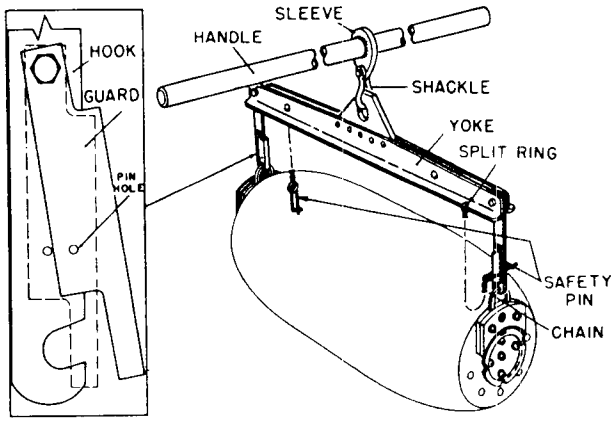


*Figure 73. Warhead handling yoke*

## 45. Missile-Handling Rings

(fig. 74)

Each of the two missile-handling rings consist of four curved aluminum alloy sections which bolt to the missile body. The four ring segments interlock to form an uninterrupted ring around the missile body and over the tunnel assemblies. The handling rings ride on the rollers on the missile dolly or the universal handling dolly, allowing the missile to be rotated around its longitudinal axis (roll). Each segment of the rings is provided with a bolt which screws into a tapped hole located at the proper place in the missile body. Felt pads are cemented to the inside of the ring segments to prevent scratching the surface of the missile. Text index notches in each segment indicate when the missile is in the desired flight attitude on the missile dolly. Holes are provided to attach the missile hoist beam.

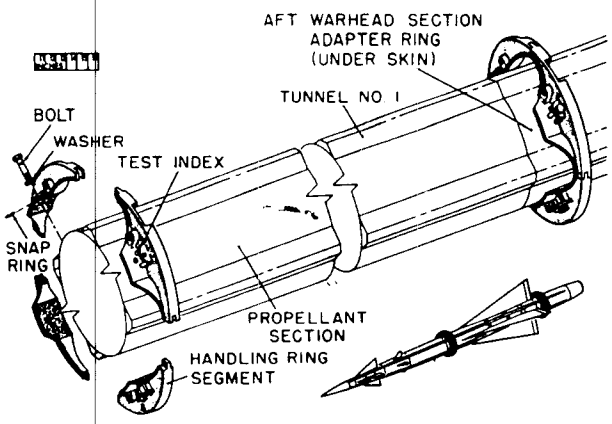


*Figure 74. Missile handling rings.*

## 46. Transporter-Trailer

(fig. 75)

*a. Description.* The missile-booster transport-trailer is a 4 dual-wheeled, flat-bed, full trailer, designed and constructed for transporting two Nike I missile-booster combinations without the two lower booster fins attached. The trailer may be towed by any vehicle of proper capacity equipped with a pintle hook and an 8-contact trailer light receptacle. The towing vehicle must also provide 6-volt electrical power, or air, depending upon the trailer braking system used. Across the width of the trailer are two tracks on which the transporting and handling rail outriggers ride. A removable stop is provided at each end of the two tracks. A detachable missile-nose guard, when attached to the rear of the trailer, protects the rounds on the trailer. On the underside of the trailer and behind the fifth wheel is a large storage compartment in which the extension ramps, universal handling dolly, handling rings, and missile hoist beam are stored. Welded on the aft end of this box are two hooks which help support the missile-nose guard when it is not installed on the rear of the trailer. On the underside of the rear of the trailer bed is a welded steel box in which the booster fins for the two rounds being transported are stored. A spiked wooden chock is provided for each set of dual wheels. An emergency braking system and a hand-operated parking brake are incorporated in the trailer. The trailer has a self-contained hydraulically-operated bed-leveling system which is used to lower the trailer bed to the desired height during the loading or unloading of the joined missile-boosters.

*b. Extension Ramps.* Two extension ramps are provided to bridge the gap between the trailer bed and the loading racks during loading and unloading. Each ramp is approximately 62 inches long when extended, 44 inches long when retracted, 2 inches wide, 6 inches deep, and weighs approximately 61 pounds. The ramps are fastened to the trailer bed by inserting the hook end of each ramp into a slotted hole at the end of each track after the track stop has been removed. They are fastened to the loading racks by a securing pin which is locked in position with a safety pin. The ramps may be installed on either side of the trailer.

*c. Missile Noseguard.* The missile noseguard is a steel pipe bent in the shape of a U. The two eye-ends fit into sockets at the rear of the trailer bed. Eyebolts secure the guard in place. When the guard is not in use, it is stored under the trailer bed. When stored, the guard rests on the two hooks welded to the storage compartment and on two J-shaped supports welded to the underside of the trailer bed.

*d. Bed-Leveling System* (fig. 76). Two separate hydraulically operated bed-leveling systems (front and rear) are incorporated in the trailer. They are used to lower and level the trailer bed to the height of the loading racks during loading or unloading. The two systems are identical except for location. The front system controls the right and left front corners. The rear system controls the right and left rear controls. The front right and left corners may be lowered or raised independently of each other or at the same time. The same is true for the rear right and left corners of the trailer. Each system has two tiedown cylinders, a manually operated pump, a reservoir, a 3-position selector valve and valve handle, and a metering valve and valve handle. One tiedown cylinder is located near each trailer shock absorber. The selector valve handle, metering valve handle and pump controls are located on the front and rear trailer bed beams. The pump handle is used to operate the pumps. When not in use, the two pump handles are stored in clips on the front and rear trailer beams. The trailer will not be towed unless the selector valve handles are in the RIDE (down) position and the metering valve handles are in the OPEN (down) position. The bed-leveling system should normally be exercised weekly to prevent the hydraulic mechanisms from freezing.

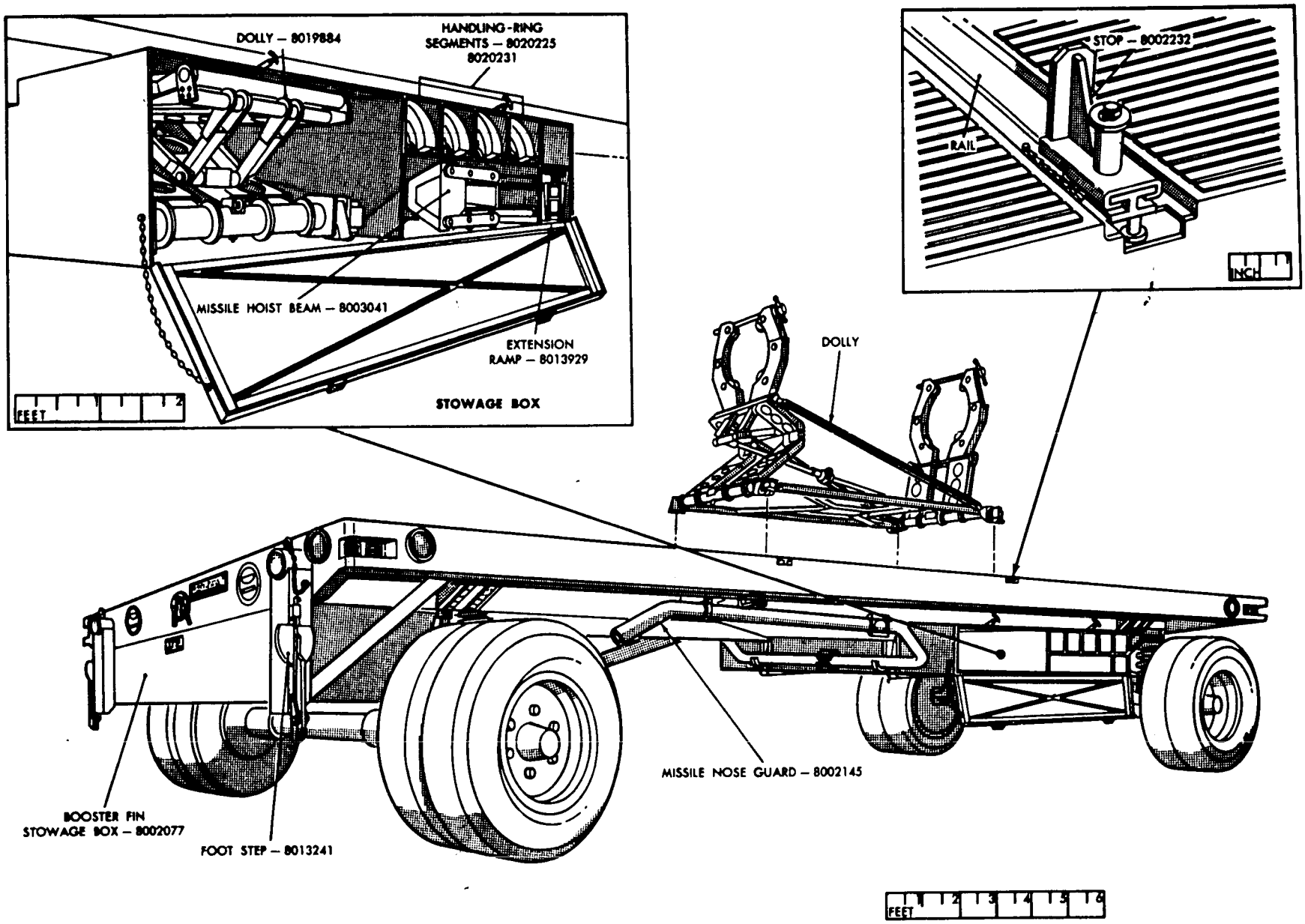


*Figure 75. Transporter-trailer.*

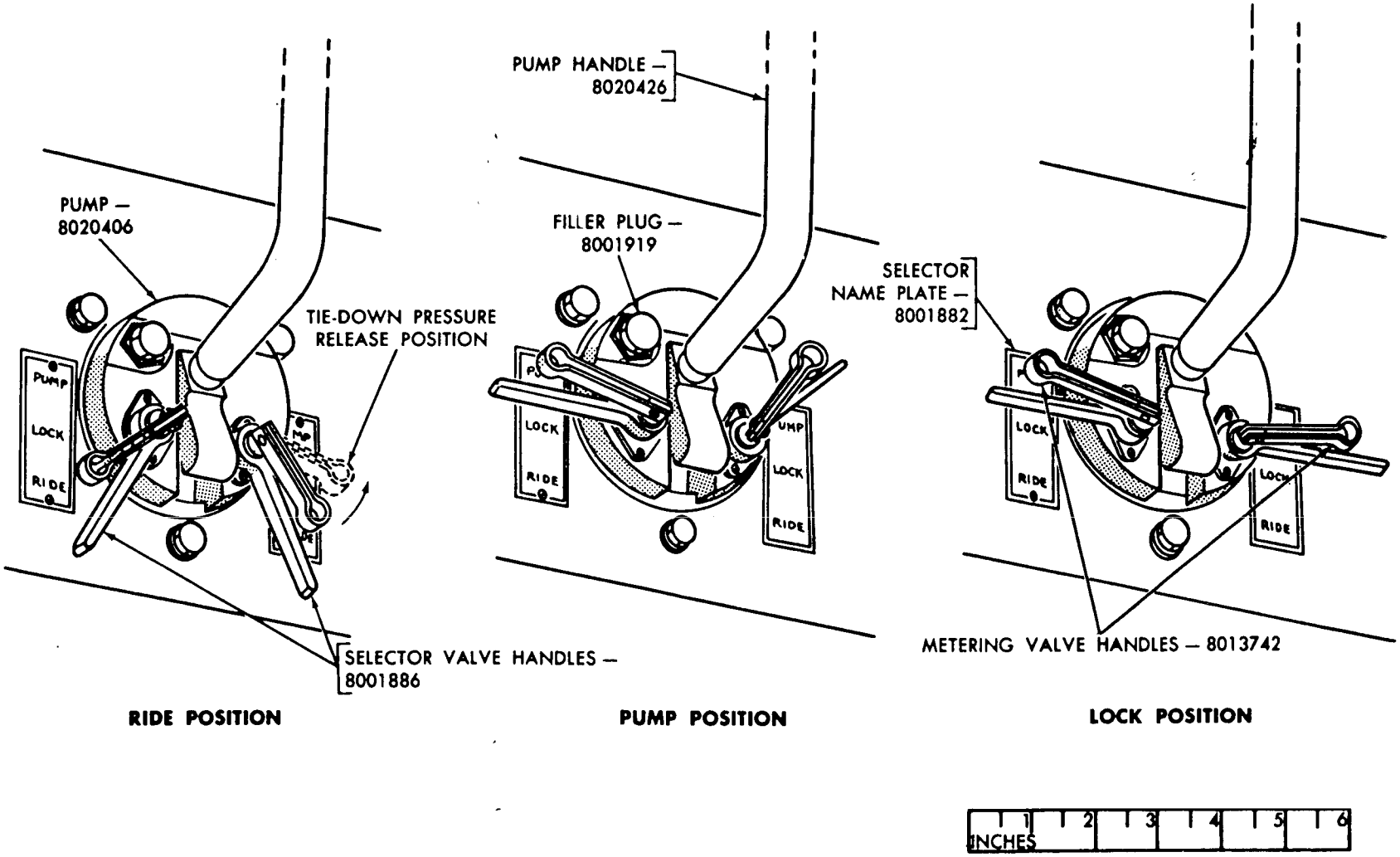


*Figure 76. Transporter-trailer bed-leveling controls.*

*e. Data.*

| | |
|---|---|
| Length of trailer, without noseguard | 308 inches. |
| Length of trailer, with noseguard | 465 inches. |
| Gross weight, without missile-booster combinations | 7,694 pounds. |
| Width of trailer | 95 inches. |
| Height of trailer, floor to ground | 46 inches. |
| Height of trailer, bumper to ground | 65 inches. |
| Weight of each extension ramp | 61 pounds. |

## Section II. PROPELLANT SERVICING EQUIPMENT

### 47. Fuel

*a. Equipment.* The equipment necessary for the fuel filling operation includes a fuel servicer, fuel measuring can, a pipe and plastic hose assembly, a fuel-fill nozzle, and a vent adapter kit. The necessary hand tools are contained in the propellant-filling tool pack.

*b. Fuel Servicer* (fig. 77). The fuel servicer, a hand operated hoist assembly with a platform, is used to raise the fuel can approximately 60 inches above the missile. The servicer is approximately 164 inches high and 40 inches wide. The fuel can is clamped on the servicer platform during fuel-filling operations. The servicer is mounted on four casters to facilitate moving. The turning lever facilitates maneuvering the servicer. The floor lock prevents movement during fueling.

*c. Fuel Measuring Can* (fig. 78). The fuel measuring can is provided so that the correct amount of fuel can be put into the missile regardless of changes in fuel temperature. A fuel temperature indicator is provided on the lower, or tank, part of the can. A sight glass with a temperature scale is located on the neck of the can. The fuel can is filled until the liquid level is at the current temperature reading. A globe valve on the side of the can near the bottom of the tank is provided with a fitting for connecting the hose assembly between the can and the missile. The fuel can is approximately 30 inches high and 12 inches in diameter. The missile holds 1,822 cubic inches of fuel at 80° F.

*d. Pipe and Plastic Hose Assembly* (fig. 79). The pipe and plastic hose assembly (fuel hose), together with the fuel-fill nozzle, connect the fuel can to the missile fuel tank.

*e. Fuel-Fill Nozzle* (fig. 80). The fuel-fill nozzle connects the plastic hose assembly to the missile. The nozzle has an integral attach fitting which screws clockwise into the missile fuel tank filler fitting to hold the nozzle in place. A plunger running the length of the inside of the nozzle is designed to hold a teflon stopper. This stopper, when completely seated, seals the fuel tank. After the opening knob has been unscrewed, a catch button on the knob must be depressed before the plunger can be pulled all the way out to allow the fuel to flow into the missile. A grounding wire is attached between the missile and the nozzle to prevent sparking.

*f. Fuel Draining Kit* (fig. 81). The fuel draining kit, a metal box approximately 24 inches by 20 inches by 18 inches with three pull-out drawers, contains the adaptors, fittings, valves, and other special equipment necessary to remove the fuel from the missile.

*g. Universal Handling Dolly* (fig. 82). The universal handling dolly is used to raise, lower, and rotate the missile during removal of the fuel and oxidizer. During use, the dolly is mounted on the bed of the transporter trailer (fig. 75). When not in use, it is stored in the storage box on the transporter trailer. The forward end of the dolly can be raised and lowered between −3° and +15°. A missile, on its handling rings, can be rotated about its longitudinal axis. The universal handling dolly may be used to transport a missile over rough terrain or long distances where the missile dolly cannot be used.

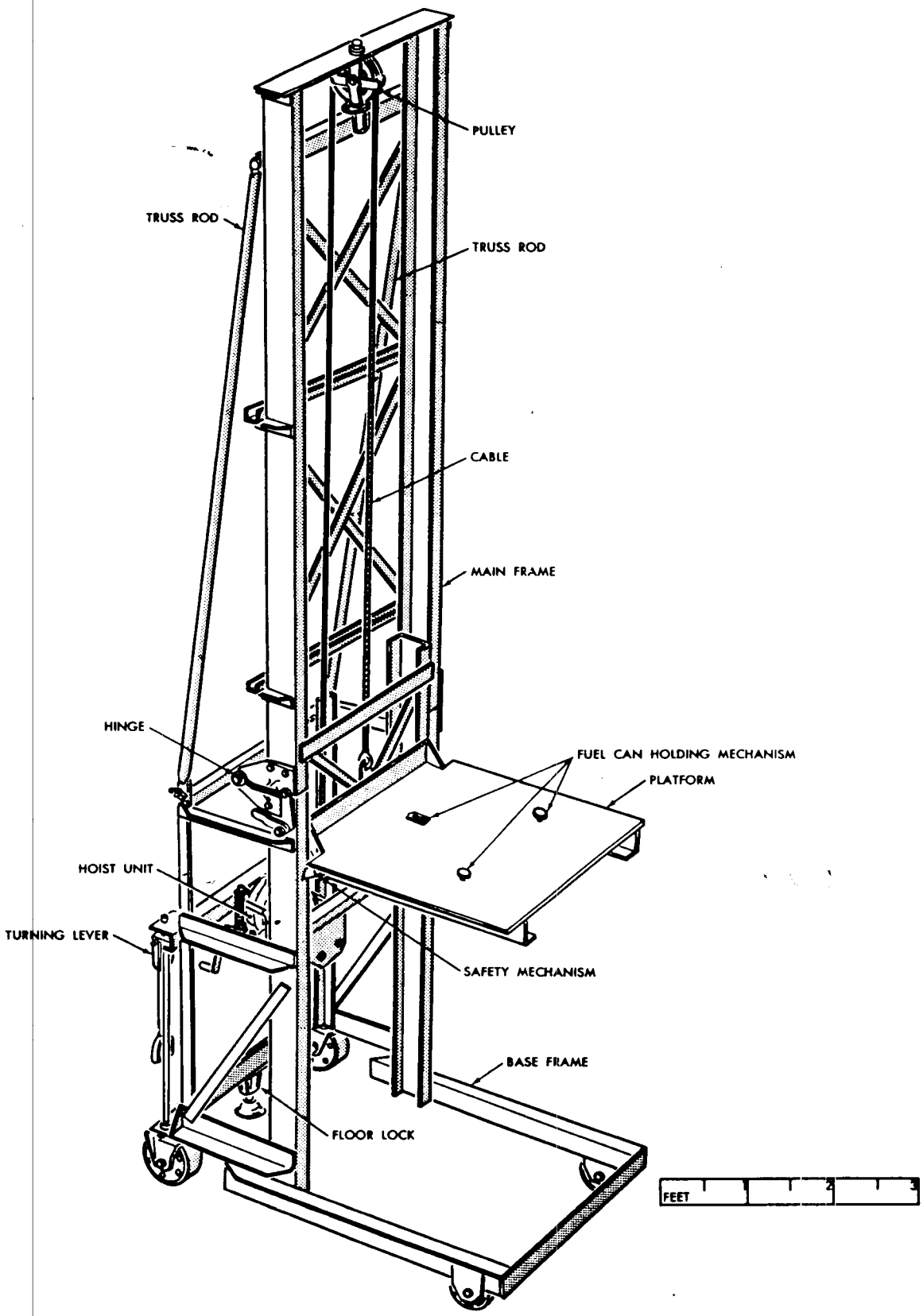


*Figure 77. Fuel servicer.*

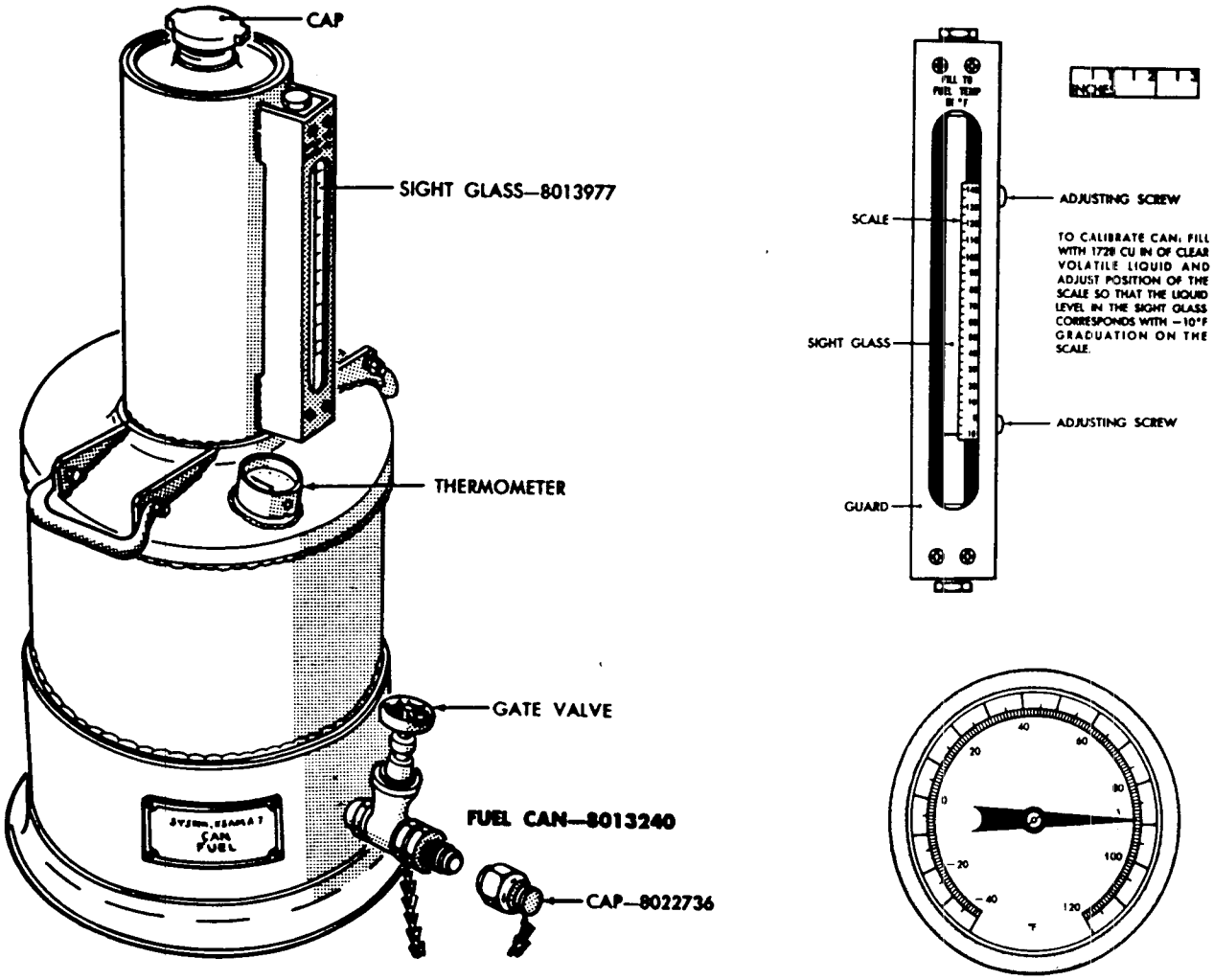


*Figure 78. Fuel measuring can.*

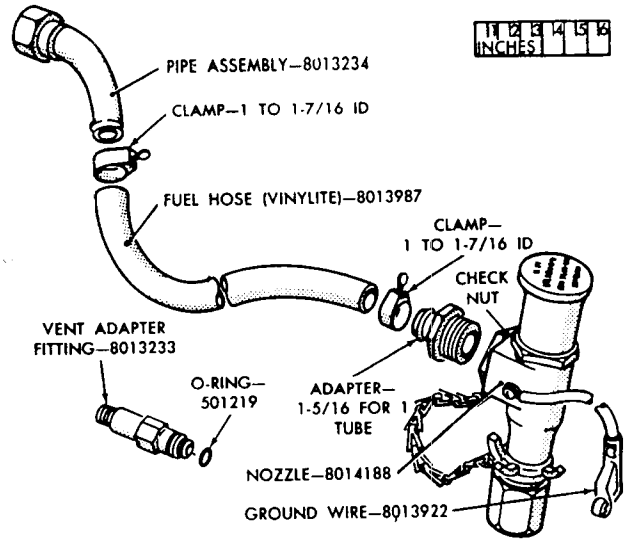


*Figure 79. Fuel pipe and plastic hose assembly.*

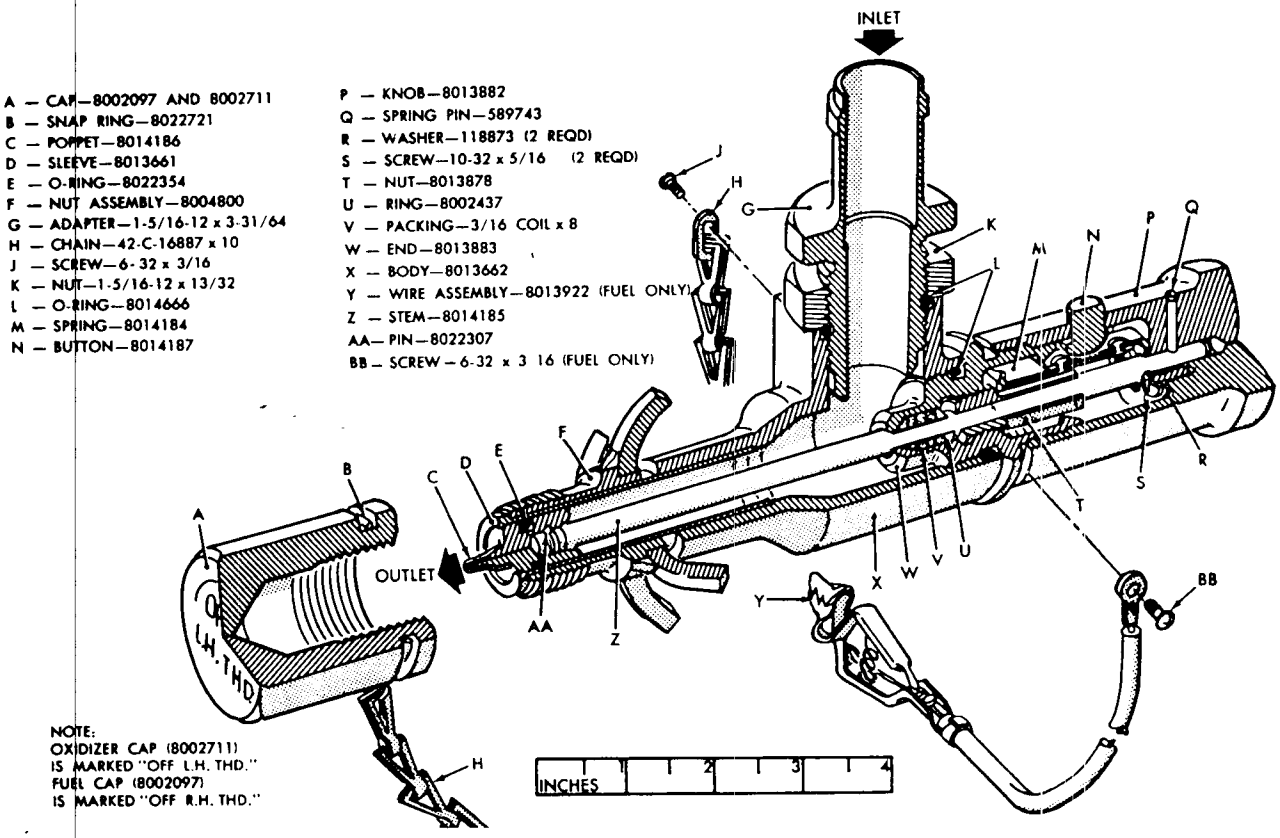


*Figure 80. Fuel-fill nozzle.*

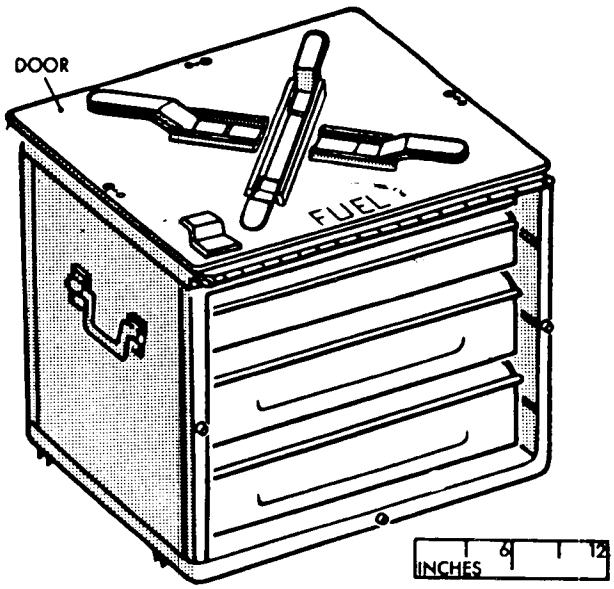


| ITEM | PART NUMBER | NUMBER REQUIRED |
|---|---|---|
| **TOP DRAWER** | | |
| ADAPTER | 8013807 | 2 |
| FITTING | 8003320 | 1 |
| O-RING | 501219 | 2 |
| STOPPER | 8013832 | 10 |
| POWER PLANT DEACTIVATION PROCEDURE | 8013850 | 2 |
| **CENTER DRAWER** | | |
| SYRINGE ASSEMBLY | 8004626 | 1 |
| PIPE ASSEMBLY | 8014431 | 1 |
| CLIP | 8014511 | 1 |
| CLAMP | 572921 | 1 |
| WASHER | 221433 | 1 |
| NUT | 503213 | 1 |
| SCREW | 132911 | 1 |
| **BOTTOM DRAWER** | | |
| VALVE ASSEMBLY | 8014293 | 1 |
| LINE ASSEMBLY | 8014484 | 1 |

*Figure 81. Fuel draining kit.*

## 48. Oxidizer (Irfna)

*a. Equipment.* The equipment necessary for the acid filling operation includes an acid drum, an acid servicer, a drain and vent assembly, a hose assembly, a vent hose assembly, a vent adapter, an oxidizer fill nozzle, a plastic splash apron or metal troughs, and the necessary protective clothing.

*b. Acid Drum* (fig. 83). The inhibited red fuming nitric acid will be received in a reusable drum containing the exact amount of acid needed to fill one missile. The drum is equipped with rings around the body to aid in handling and fastening the drum to the servicer.

*c. Acid Servicer* (fig. 84). The acid servicer is a hand-operated hoist assembly used to raise the acid drum approximately 12 feet above the ground during acid servicing. The servicer automatically turns the drum upside down during elevation. The servicer is approximately 164 inches high and 50 inches wide. It is mounted on four casters to facilitate moving. The acid drum is fastened to the servicer by rings. The servicer has a turning lever and floor lock similar to the fuel servicer.

*d. Drain and Vent Assembly* (fig. 85). The drain and vent assembly is used to attach the hoses to the drum-bung fitting. The vent tube on the assembly projects above the level of the acid inside the drum when the drum is raised and inverted. A globe valve on the vent port prevents acid from entering the vent tube. The acid drains around the vent tube and into the acid-fill hose through an elbow fitting in the side of the assembly.

*e. Acid-Fill Hose Assembly.* The acid-fill hose assembly consists of two sections of flexible stainless steel hose and a coil-stiffened clear plastic hose coupled together.

*f. Vent Hose Assembly.* The vent hose assembly is composed of two coupled sections of flexible stainless-steel hose. The assembly is provided with fittings which attach to the vent adapter and to the globe valve.

*g. Vent Adapter.* The vent adapter screws into the missile acid tank vent fitting to provide an attachment for the vent hose. It serves the additional function of helping retain the plastic splash apron or the metal troughs in place on the missile.

*h. Acid-Fill Nozzle.* The acid-fill nozzle is similar to the fuel-fill nozzle. It is provided with an integral attach fitting which screws counterclockwise into the missile acid tank filler fitting to hold the nozzle in place. A plunger running the length of the inside of the nozzle is designed to hold a plastic (teflon) stopper. This stopper, when completely seated, seals the tank. After the opening knob has been unscrewed, a catch button on the knob must be depressed before the plunger can be pulled all the way out to allow the acid to flow into the missile acid tank.

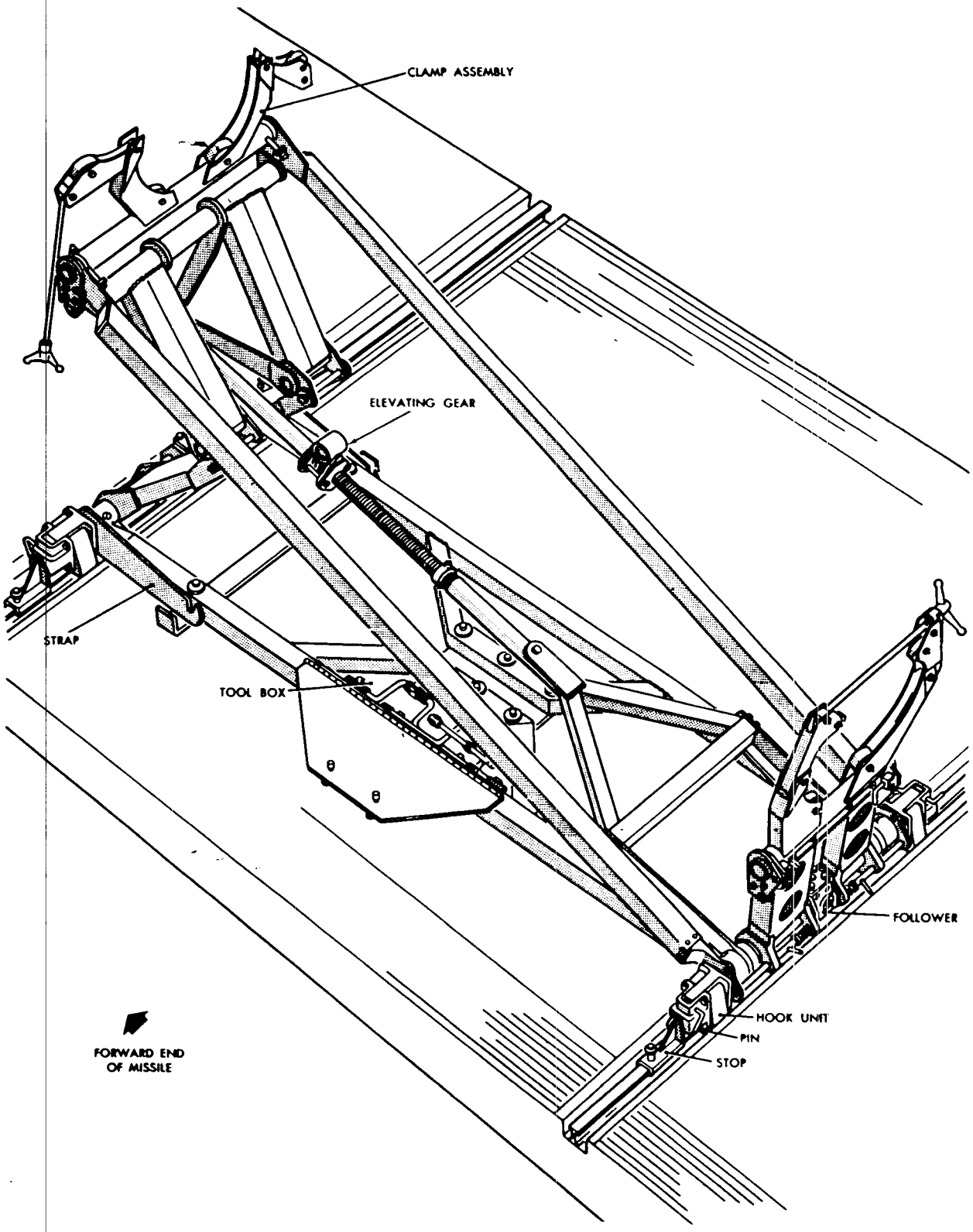


*Figure 82. Universal handling dolly.*

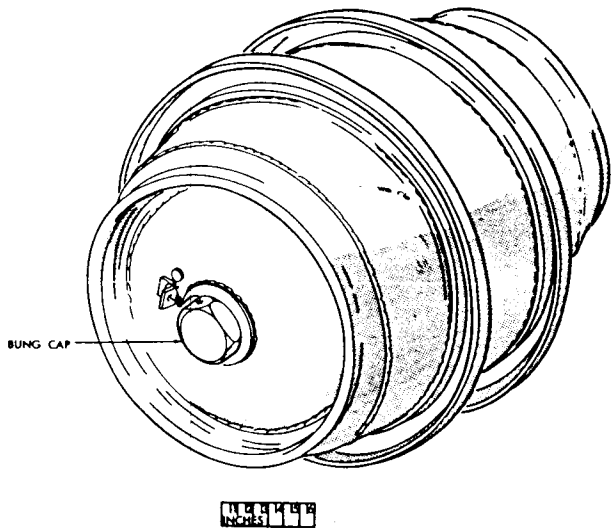


*Figure 83. Acid drum.*

*i. Splash Apron* (fig. 86). A plastic splash apron is provided to protect the missile in the event acid is accidentally spilled. It is held in place on the missile by two corrosion-resisting screws at the oxidizer filler fitting and by the vent adapter at the oxidizer vent fitting. This apron is being replaced by acid-resisting metal troughs or splash pans (fig. 87) designed to fit over the missile. A hose carries any acid that might be spilled to a suitable container sitting on the ground beside the transporter trailer.

*j. Protective Clothing.* Acid-resisting boots, pants, coat, gloves, and hood are provided for personnel protection during acid filling and removal operations. See TB 10–277 for a detailed description and using instructions.

*k. Oxidizer Draining Kit* (fig. 88). The oxidizer draining kit is of the same design as the fuel draining kit. It contains the adapters, valves, lines, hoses, and other special equipment necessary to remove the oxidizer from the missile.

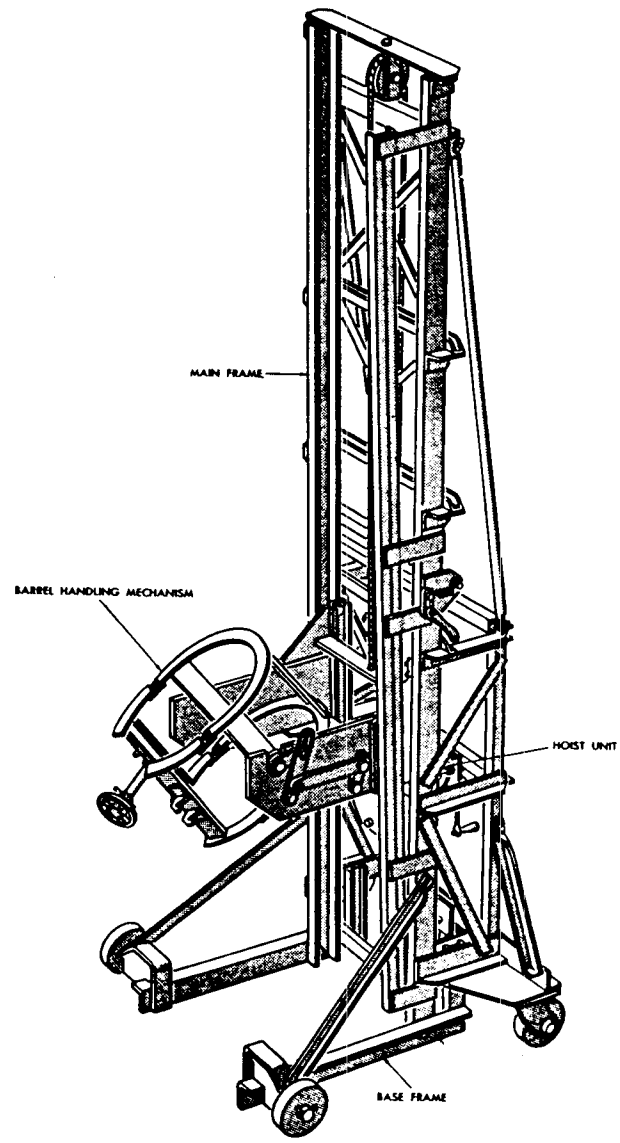


*Figure 84. Acid servicer.*

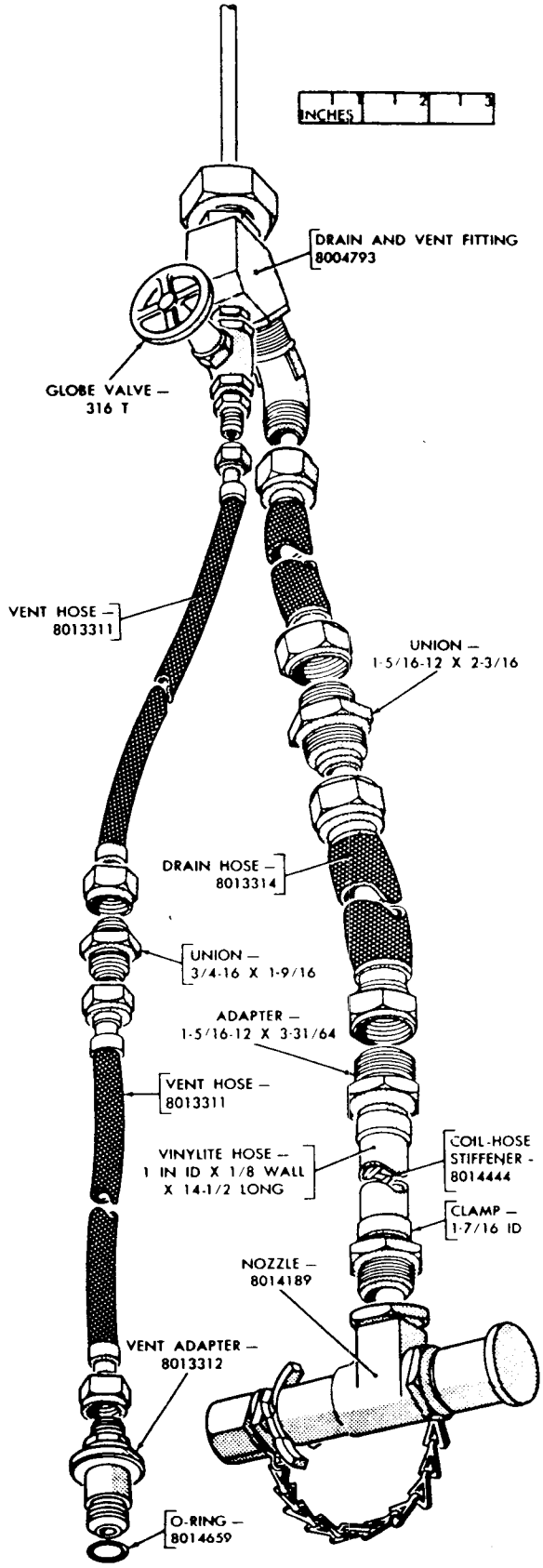


*Figure 85. Drain and vent assembly.*

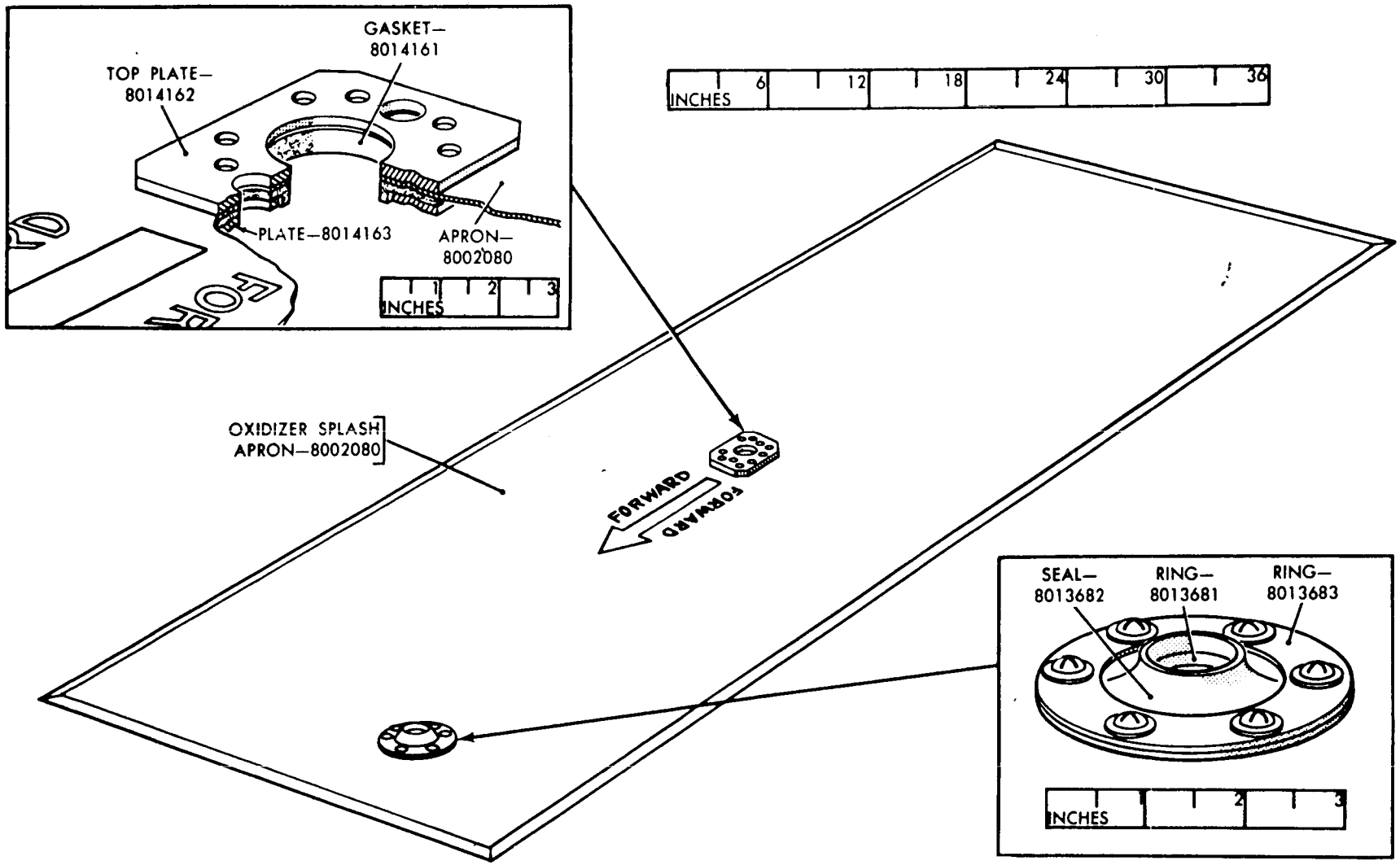


*Figure 86. Splash apron.*

## 49. Starting Fluid

The starting fluid will be received in individual containers, each of which contains sufficient starting fluid for servicing one missile. There are two kinds of starting fluid—unsummetrical dimethyl hydrazine (UDMH), and a mixture of aniline and furfuryl alcohol. The aniline-alcohol mixture is inserted into the missile with the starting fluid syringe. The syringe will hold the exact amount of starting fluid for one missile. The hydrazine mixture will be inserted into the missile by connecting the shipping container to the starting fluid filler plug in the missile, raising the bottle above the missile, and allowing the fluid to flow into the missile by gravity.

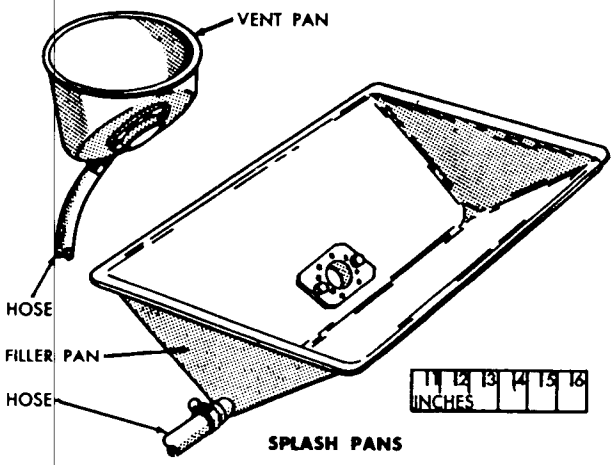


*Figure 87. Splash pans.*

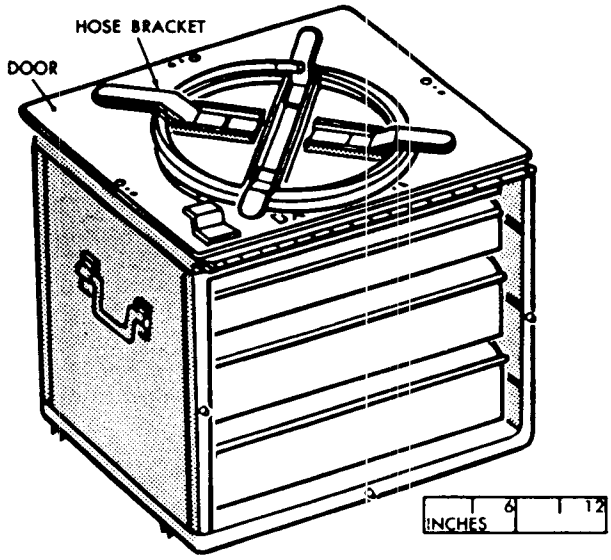


| ITEM | PART NUMBER | NUMBER REQUIRED |
|---|---|---|
| **TOP DRAWER** | | |
| O-RING | 8014659 | 2 |
| REDUCER | 3/4 OD to 1/2 OD | 1 |
| UNION | CE815-1255 (COLLINS) | 1 |
| CLAMP | 11/16 ID | 1 |
| PIPE ASSY | 8014402 | 1 |
| FITTING | 8013809 | 2 |
| VALVE | 8014397 | 1 |
| STOPPER | 8013832 | 10 |
| DIAPHRAGM | 8013830 | 10 |
| POWER PLANT DEACTIVATION PROCEDURE | 8013850 | 2 |
| GASKET | 8013669 | 1 |
| **CENTER DRAWER** | | |
| FITTING ASSY | 8014472 | 1 |
| LINE ASSY | 8014475 | 1 |
| **BOTTOM DRAWER** | | |
| LINE ASSY | 8014474 | 1 |
| **DOOR** | | |
| VENT HOSE | 8014476 | 1 |

*Figure 88. Oxidizer draining kit.*

# Section III. TEST EQUIPMENT

## 50. Responsibility

While nontechnical operator personnel in a Nike battery will not normally be required to perform technical missile tests, they will be required to assist in the emplacement and march order of the equipment. This section is intended to acquaint the operator personnel with the test equipment used, its purposes in general, and the procedure for emplacement and march order. Appropriate technical publications, when published, should be consulted for detailed technical information and procedures.

## 51. Test Equipment

Tests must be performed on the missile and booster during assembly, prior to joining the missile and booster, periodically in the launching area, and prior to firing. The following major items of test equipment are used.

*a.* Complete test set XM22 or portable test set XM20.

*b.* Capping compressor.

*c.* Propulsion plumbing tester.

*d.* Missile hydraulic test stand.

## 52. Test Sets

*a. Complete Test Set XM22* (fig. 89). The complete test set XM22 consists of the missile rf test set, the missile electrical test set, the antenna waveguide assembly, the stagnation pressure pump, and the associated cables. When used in the assembly area it is mounted on top of the hydraulic test stand.

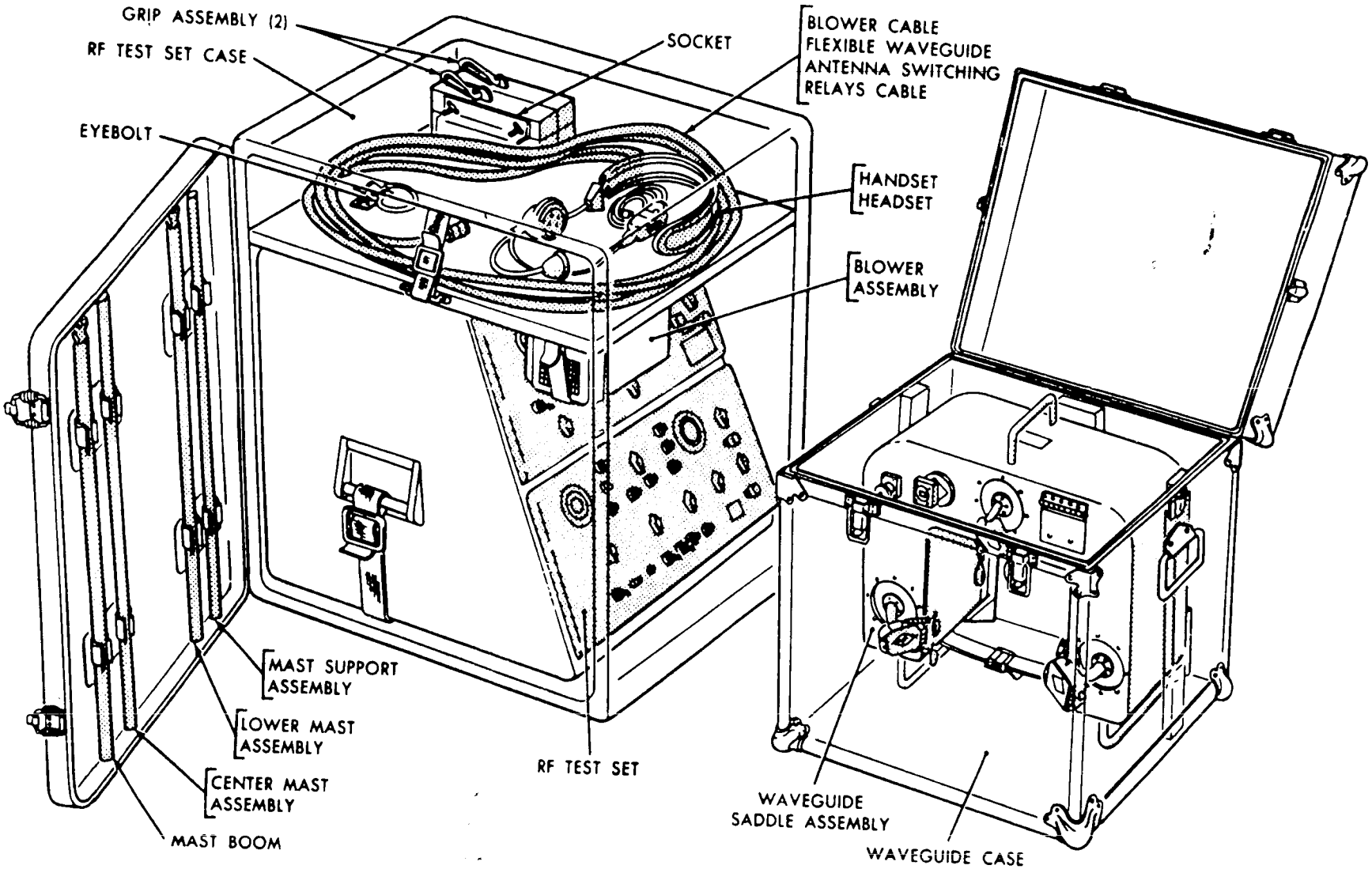


*Figure 89. Complete test set XM22.*

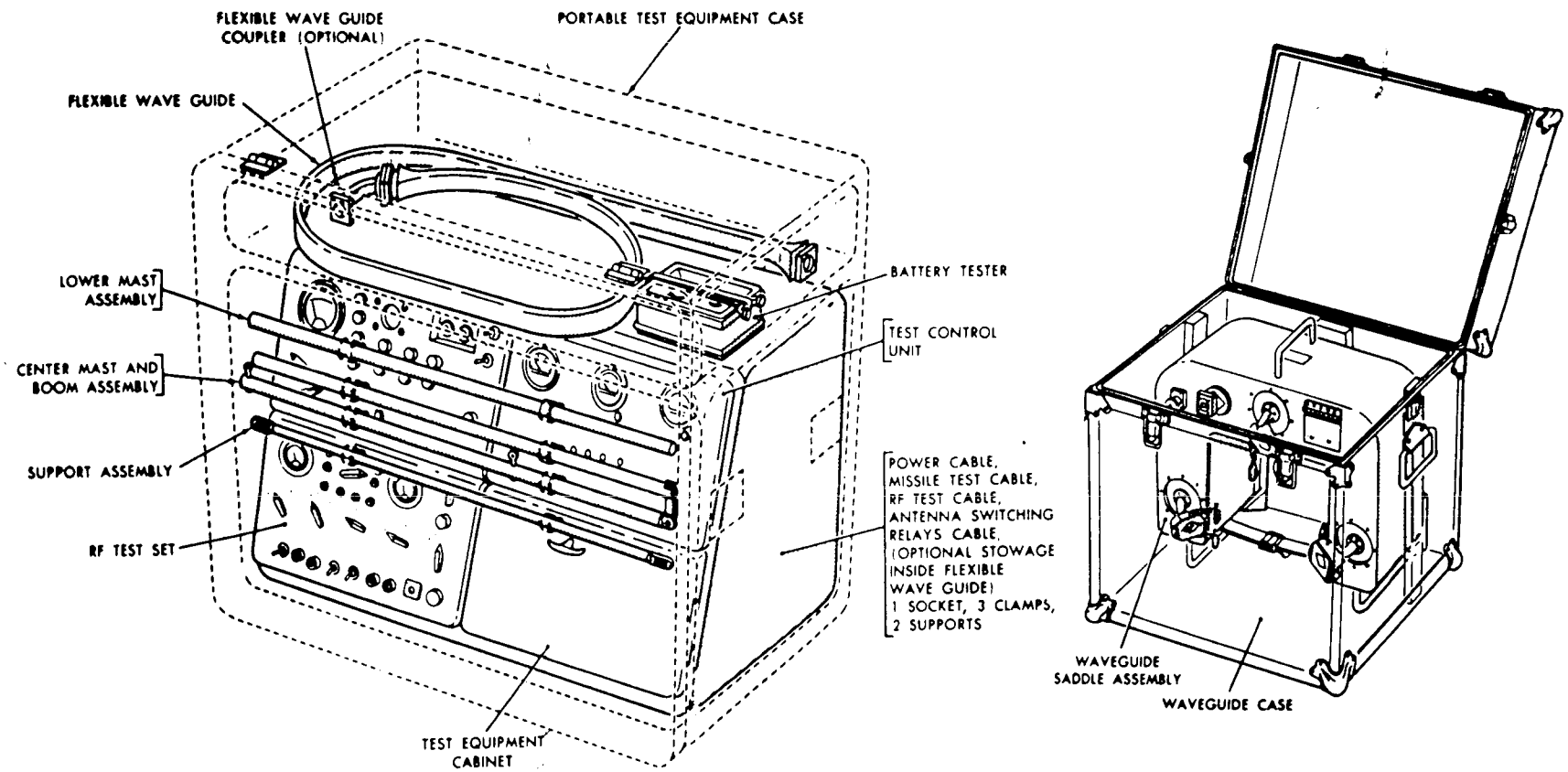


*Figure 90. Portable test set XM20.*

*b. Portable Test Set XM20* (fig. 90). The portable test set XM20 consists of the missile rf test set, the missile electrical test set without the test power control unit, the antenna waveguide assembly, and the associated cables. In ConUS units, this test set will be mounted on a dolly.

*c. Use.* The complete test set XM22 was designed to be used when missile and booster preparation, assembly, and test was accomplished in an assembly and service area. ConUS type units have an assembly area in each firing battery and require portable equipment. The portable test set will be mounted on a dolly so that it can be moved from section to section within a battery. The following items of the launching section and the launcher-loader assembly are required when making the various tests with the portable test set XM20.

(1) Launching section power cabinet.
(2) Launching section control panel.
(3) Launcher operating panel.
(4) Launching section power supply.
(5) Missile-testing hydraulic unit (in the launcher-loader assembly).

## 53. Missile Electrical Test Set

*a. Complete Test Set* (fig. 89). The missile electrical test set used in the complete test set is housed in a waterproof sheet-metal case with a sloping front panel. It consists of a cooling fan, the test control unit, the test power control unit, and the necessary cables, meters, and switches for proper operation. A case is provided for protection during transit and periods of nonoperation. The test set is designed to set on the top of the hydraulic test stand when used to check out a completed missile. The test control unit and the test power control unit are removable drawer-type units. The cable connections, made through the rear of the cabinet, are such that either or both drawers can be pulled out without disconnecting the cables. The test control unit is the upper drawer and the test power control unit is the lower drawer. The test control unit contains the meters, indicators, and switches used in testing the missile. The test power control unit supplies external power to the missile and has operational control over all the circuits passing through the missile ground-power plug receptacle. The cables from the electrical test set to the missile are supported by a swinging boom on the left-hand side of the hydraulic test stand. The set is used to test the electrical circuits and functioning of the missile. An auxiliary blower is provided to cool the missile guidance package during missile test.

*b. Portable Test Set* (fig. 90). The missile electrical test set used in the portable test set XM20 is the same as in the complete test set XM22 except it does not contain the test power control unit. Power for operating the portable test equipment is obtained from the launcher electrical junction box instead of the test power control unit. The test set is stored in a test equipment case. This case, approximately 42 inches high and weighing approximately 400 pounds, contains a missile rf test set, the electrical test set (less the test power control unit), a battery tester, a cable supporting mast, a lower mast support, a flexible waveguide, an antenna switching relays cable, and an rf waveguide assembly. The waveguide assembly is stored in a separate case. The flexible waveguide, the missile test cable, and the antenna switching relays cable are supported by a mast assembly.

## 54. Missile Rf Test Set

The missile rf test set is a completely enclosed console housed in a magnesium cabinet with a sloping front panel. In the complete test set, a case similar to the electrical test set is provided for protecting the test set during transit and nonoperational periods. In the portable test set the missile rf test set is protected by the test equipment case. During completed missile test and checkout, the missile rf test set is mounted on the top of the hydraulic test stand and to the left of the electrical test set (complete test set) or in the test equipment case (portable test set). The missile rf test set is made up of two removable drawers, an upper equipment drawer and a lower equipment drawer. The rf connections to the missile are made through a flexible waveguide which is supported by a swinging boom. The test set contains a blower for cooling the test equipment. This blower is on whenever the ac power switch is in the ON position.

## 55. Antenna Waveguide Assembly
(fig. 91)

The rf connections at the missile are made through the missile antennas by means of the antenna waveguide assembly. This assembly has its own carrying case. In operation, the waveguide assembly fastens directly on the missile.

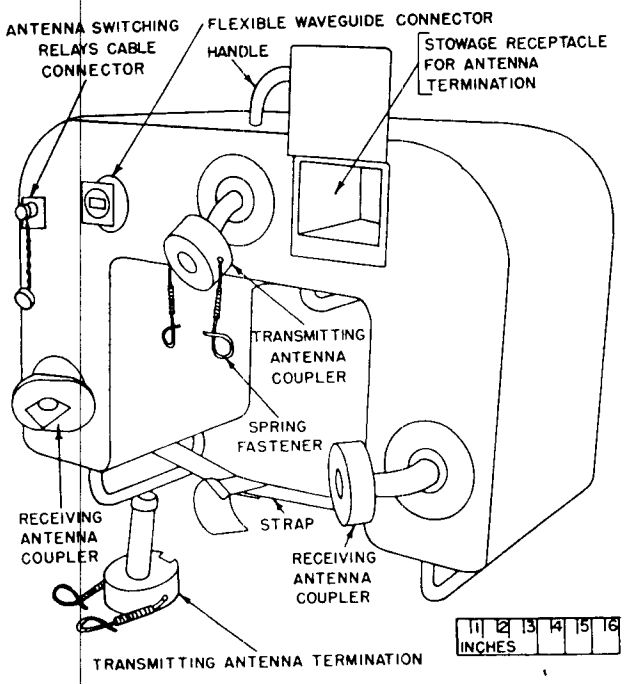


*Figure 91. Antenna waveguide assembly.*

## 56. Stagnation Pressure Pump

The stagnation pressure pump is provided to make a test of the ram pressure devices in the missile. It is a hand-operated pump with the necessary valves and controls to make it possible to be operated as either a vacuum pump or pressure pump. The unit is approximately 16 inches high and weighs approximately 20 pounds.

## 57. Capping Compressor

*a. General Description* (fig. 93). The capping compressor, used to pressurize the missile, is a gasoline engine-driven, close-coupled, high-pressure air compressor, complete with reduction geared transmission, clutch, inlet and outlet air filters, pressure regulators, drier, reactivator, and a 110-volt, 60-cycle, single-phase power supply. The complete unit is skid mounted and completely enclosed by removable steel panels. The panels are opened to provide access to the unit and allow air to enter the unit for cooling purposes. The major components are the driving engine, compressor, two driers, and a reactivating unit. The entire unit is approximately 95 inches long, 60 inches wide, 65 inches high, and weighs approximately 5,000 pounds.

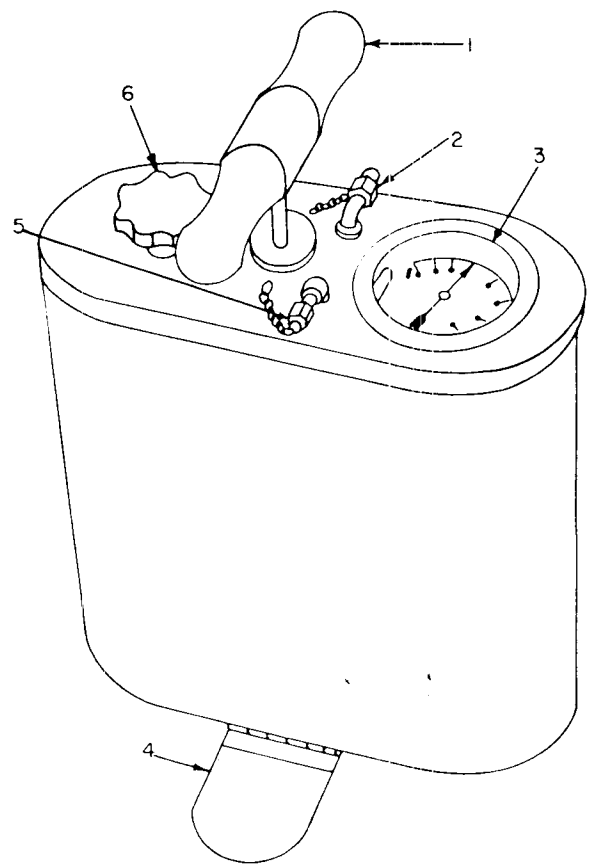


1. PUMP HANDLE
2. LINE FITTING
3. PRESSURE-VACUUM GAGE
4. LEG
5. VENT FITTING
6. PRESSURE-VACUUM SELECTOR VALVE

*Figure 92. Stagnation pressure pump.*

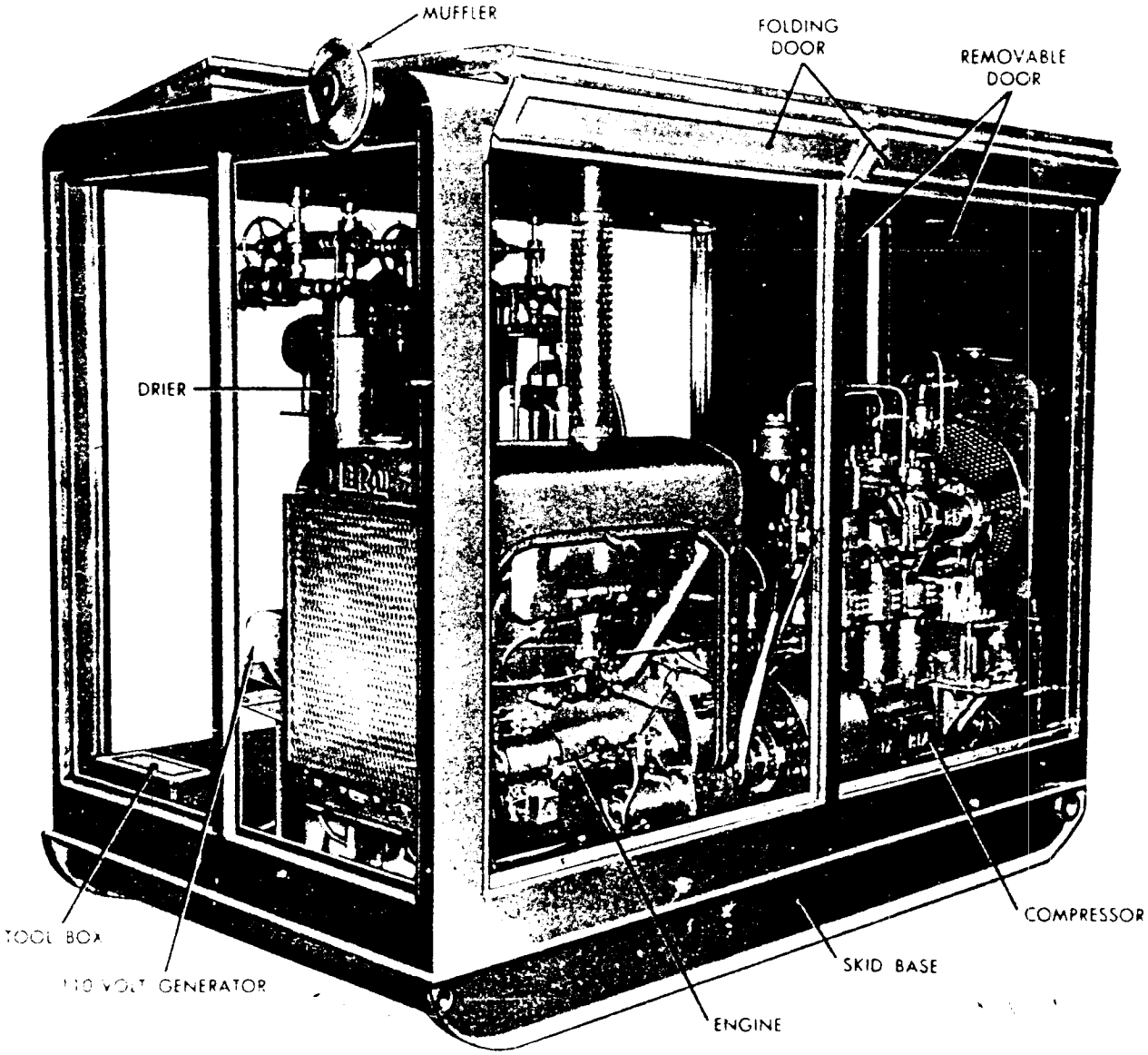


*Figure 93. Capping compressor.*

*b. Engine.* The compressor is driven by a watercooled, 4-cylinder, valve-in-head Le Roi engine. Table XXXIX shows the engine data.

*c. Compressor.* The compressor, driven by the engine, is the unit which actually compresses the air. It is a 3-cylinder, 3-staged, single-acting, high-pressure unit. It is directly coupled to the engine through a reduction-gear unit. A hand-operated clutch makes it possible to run the engine without the compressor load. Two intercoolers and one aftercooler are provided to remove the heat from the compressed air. A radiator and a fan and water pump assembly cool the water used in the two intercoolers and the aftercooler. The fan and water pump assembly is belt-driven from the compressor crankshaft. Five gages, located on the drier control panel, indicate the pressure in each of the three stages of compression and in the two driers. Low-, intermediate-, and high-pressure safety valves are incorporated in the compressor. Drain valves are provided for cold-weather protection. The compressor delivers 3,500 psi.

*d. Driers.* After the air is compressed it must be dried before it is satisfactory for use in the missile. Two separate driers are provided for this purpose. In normal operation, one of the driers is used for drying the air while the other is

*Table XXXIX. Compressor Engine Data*

| | |
|---|---|
| Make | Le Roi. |
| Model | 140. |
| Number of cylinders | 4. |
| Cooling system capacity | 3.5 gallons. |
| Oil capacity | 4.5 quarts. |
| Brake horsepower | 33.5 (intermittent load rating 2,400 rpm). |
| Permissible speeds: | |
| Continuous load | 2,200 rpm. |
| Intermittent load | 2,400 rpm. |
| Idle | 500 rpm. |

being reactivated (dried). The drying material in the driers is activated alumina. Under normal conditions each drier, when properly reactivated, is suitable for drying periods of 8 to 10 hours. Reactivation requires four hours of drying followed by four hours of cooling. This makes continuous operation of the compressor possible. The cylinders and high-pressure packings are lubricated by means of a four-feed mechanical lubricator, belt driven from the compressor crankshaft.

*e. Reactivation Unit.* Reactivation (drying) is accomplished by forcing hot air through the drier. The heated air is circulated by the reactivation pump. The pump is driven by a 110-volt, 60-cycle, ac motor. Two impellers, mounted on parallel shafts, rotate within the cylinder or casing. As the impellers rotate, air is drawn into the pump from the atmosphere, forced through a heater, then through the drier, and finally discharged into the atmosphere. A relief valve is connected in the air piping between the pump and the heater to prevent damage to the pump in the event of increased pressure or suction load.

*f. Scheme of Operation* (fig. 94). Air at atmospheric pressure enters the compressor through the air inlet filter and passes into the first-stage cylinder where it begins the first of three stages of compression. The pressure in the first stage is approximately 85 psi. From the first-stage cylinder the air goes to the first-stage intercooler. Here heat caused by the compressing action is carried off through the water circulating around the intercooler. From the first-stage intercooler the air goes to the second-stage cylinder where it is compressed to approximately 500 psi. The compressed air then travels through the second-stage intercooler where it is cooled, and then into the third-stage cylinder. In the third-stage cylinder, the air is compressed to approximately 3,500 psi. From the third-stage cylinder, the air goes through the aftercooler where it is cooled to 125° or less. The compressed air is then piped to the prefilter where all particles of dirt, scale, and oil mist over six microns are filtered from the air. The compressed air then enters one of the two driers where excess moisture is adsorbed by the activated alumina. After leaving the drier, the compressed air passes through a dust filter where any dust or foreign material picked up in the drier is filtered out. From the filter the compressed air goes to the high-pressure outlet connection to the missile. Drain valves are provided at the intercoolers and the aftercooler for draining the water from the coolers. A pressure switch, connected to the magneto ground switch, will stop the engine when the air pressure exceeds approximately 4,000 psi.

## 58. Propulsion Plumbing Tester
(fig. 95)

This is a caster-mounted air compressor having a rated capacity of 10 to 160 pounds per square inch. The unit is approximately 38 inches long, 18 inches wide, 36 inches high, and weighs approximately 250 pounds. The compressor is driven by a ¾ hp 60-cycle electric motor, and has a 30-gallon air tank.

## 59. Missile Hydraulic Test Stand

*a. General Description* (fig. 96). The missile hydraulic test stand provides a source of high-pressure hydraulic fluid for filling and testing the missile hydraulic system. It has a maximum flow of 2 gallons per minute at a pressure of 2,000 pounds per square inch. The hydraulic test stand supports the missile rf test set and the electrical test set during a completed missile checkout. The electrical cables and hydraulic hoses are supported by the two swinging boom assemblies. Table XL shows the characteristics of the major components of the test set.

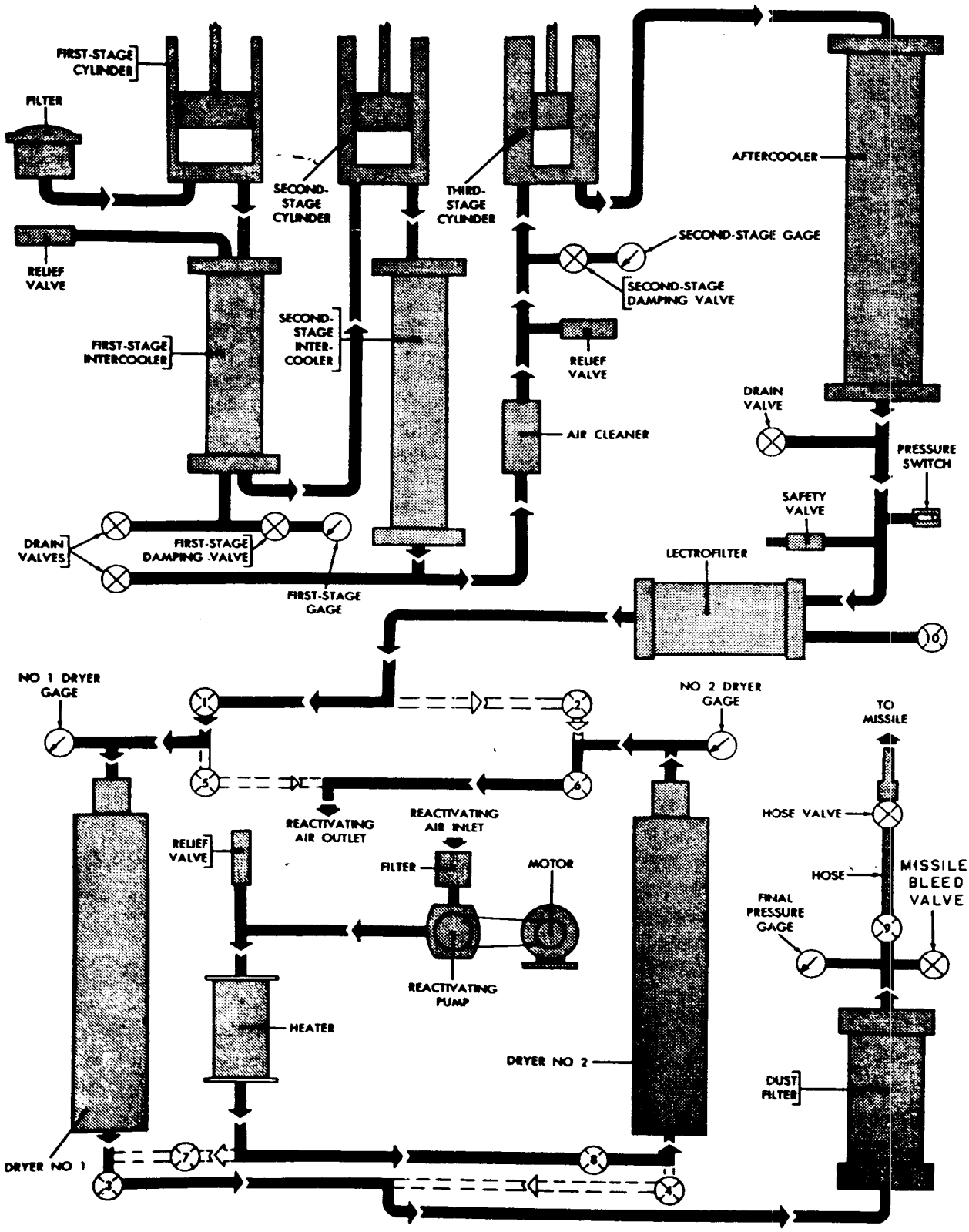


*Figure 94. Block diagram, capping compressor.*

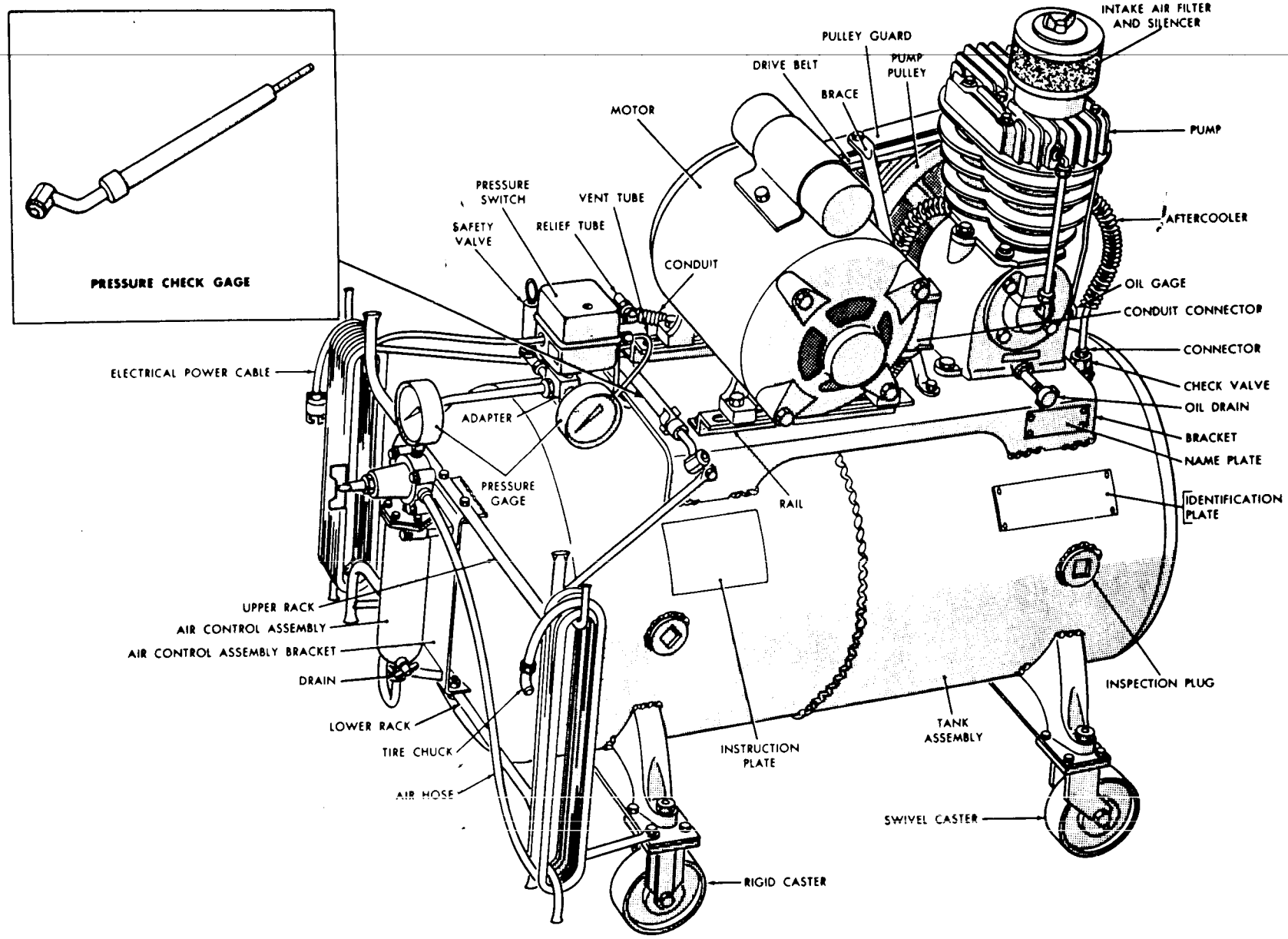


*Figure 95. Propulsion plumbing tester.*

*Table XL. Hydraulic Test Stand Characteristics*

| Item | Dimensions | Weights | Capacity |
|---|---|---|---|
| Test stand | 59 by 32 by 38 inches | 1,500 lb | |
| Hydraulic reservoir | 45 by 28 by 17 inches | | 55 gallons. |
| Electric motor | 3-phase, 60-cycle, 5 hp, 208/220 volts or 416/440 volts. | | |
| Pump | | | 2 gallons per minute at 2,000 psi. |
| Accumulator | 5-inch diameter, 19 inches long | | 200 cu. in. at 150 psi. |
| Unloading valve | | | 1,750 to 1,950 psi. |
| System relief valve | | | 2,250 to 2,350 psi. |
| Power supply cable | Length 50 ft, 4 leads (1 ground) | | |
| Hydraulic hoses (2) | 3⅛ in. by 214 in | | |

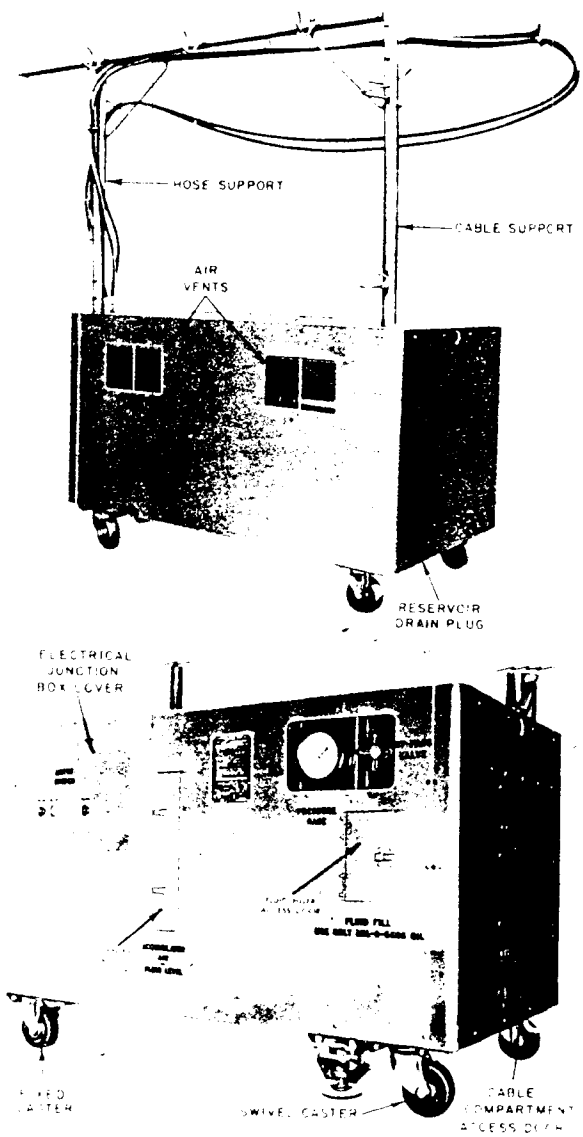


*Figure 96. Missile hydraulic test stand.*

*b. Scheme of Operation* (fig. 97).

(1) Hydraulic fluid (MIL–0–5606), stored in the test stand reservoir, is drawn through a suction line filter into the electrically driven pump. This 2-stage, van-type pump forces the fluid into the high-pressure line and through the system relief valve. The system relief valve has two outlets, one to the high-pressure line (H) and one to the low-pressure return line (L). If the unloading valve fails to function properly and the pressure exceeds the setting of the system relief valve (2,250 to 2,350 psi) the high-pressure oil is diverted into the low-pressure return line and back to the reservoir instead of back through the pump.

(2) From the system relief valve, the high-pressure line goes to the unloading valve. The unloading valve also has connections to the return line and to the high-pressure line. This valve is set so that when the pressure in the line exceeds 1,750 to 1,950 pounds per square inch, the high-pressure oil is diverted into the return line and back to the reservoir.

(3) The high-pressure line from the unloading valve connects into a two-way tee. One side of this tee connects to the low-pressure return line through the manual bypass valve. When the manual bypass valve is opened (counterclockwise), the high-pressure oil is returned to the low-pressure return line. When the valve is closed (clockwise) the low-pressure return line port is closed and the hydraulic oil is forced further toward the outlet (the

hydraulic ground power plug). The outlet pressure at the hydraulic ground power plug, as read on the hydraulic fluid pressure gage, can be adjusted by opening or closing the manual bypass valve.

(4) The high-pressure line from the manual bypass valve couples into a two-way tee. One side of this tee is coupled to the hydraulic ground power plug. Two oil filters are in this line. The other outlet from the two-way tee connects to another tee. One side of this tee is connected to the accumulator. The other side is connected to the solenoid valve. When the motor and pump are operating, the solenoid valve is closed. When the motor and pump are stopped, the solenoid valve opens and diverts the high-pressure oil into the low-pressure return line and back into the reservoir.

(5) The accumlator contains dry nitrogen or air at a pressure of 650 (±25) pounds per square inch. This high-pressure dry air or nitrogen dampens the pulsations of the hydraulic pump and helps maintain an unfluctuating hydraulic oil pressure at the hydraulic ground power plug.

(6) Oil filters in the system remove any impurities in the oil which might adversely affect the operation of the missile hydraulic system.

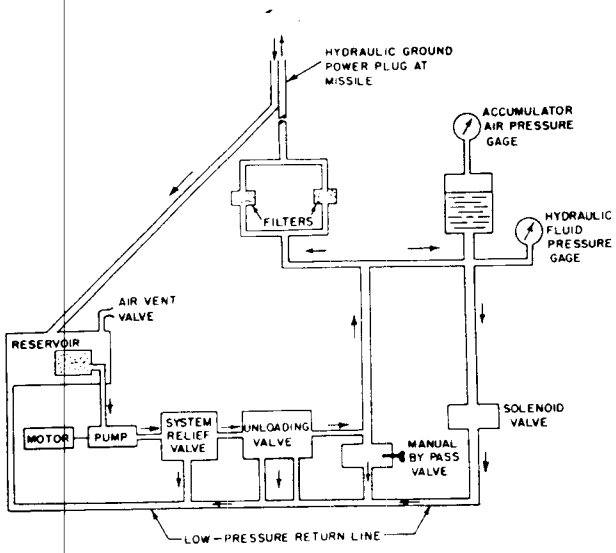


*Figure 97. Hydraulic flow diagram.*

(7) An air-vent check valve in the reservoir allows the air to enter and leave the reservoir to prevent building up a vacuum or pressure during operation of the test set.

(8) Connection is made to the missile through the ground power plug inserted into the missile. This plug has a return line from the missile to the test stand reservoir.

c. *Controls and Indicators* (fig. 98)

(1) *Motor control pushbuttons.* Three motor control pushbuttons, START, STOP, and RESET, are mounted on the upper left front panel of the test stand. The start pushbutton is used to start the motor, the stop to stop the motor, and the reset to close the circuit breaker in event it is opened during operation due to an overload.

(2) *Manual bypass valve handle.* The manual bypass valve handle is located in the recess in the upper right-hand corner of the test stand. It is used to control the pressure at the hydraulic ground power plug. Turning the handle clockwise closes the valve and increases the pressure. Counterclockwise opens the valve and decreases the pressure.

(3) *Test stand truck lock.* The test stand truck lock is mounted on the front of the test stand near the right front caster. It locks the stand in one position during test and storage.

(4) *Accumulator air-pressure gage.* The accumulator air-pressure gage is located inside the center access door on the front of the test stand. It indicates the air pressure in the test stand accumulator. The gage has a pressure range from 0 to 3,000 pounds per square inch.

(5) *Hydraulic fluid level gage.* The hydraulic fluid level gage is located inside the center access door and below the accumulator air-pressure gage. It is a direct-reading gage indicating the amount of hydraulic fluid in the test stand reservoir.

(6) *Hydraulic fluid-pressure gage.* The hydraulic fluid-pressure gage is locate in the recess in the upper right front of the test stand and to the left of the manual bypass valve handle. This gage indi-

cates the hydraulic fluid pressure at the hydraulic ground power plug. It has a range from 0 to 3,000 pounds per square inch. This gage is referred to when adjusting the hydraulic fluid pressure with the manual bypass valve.

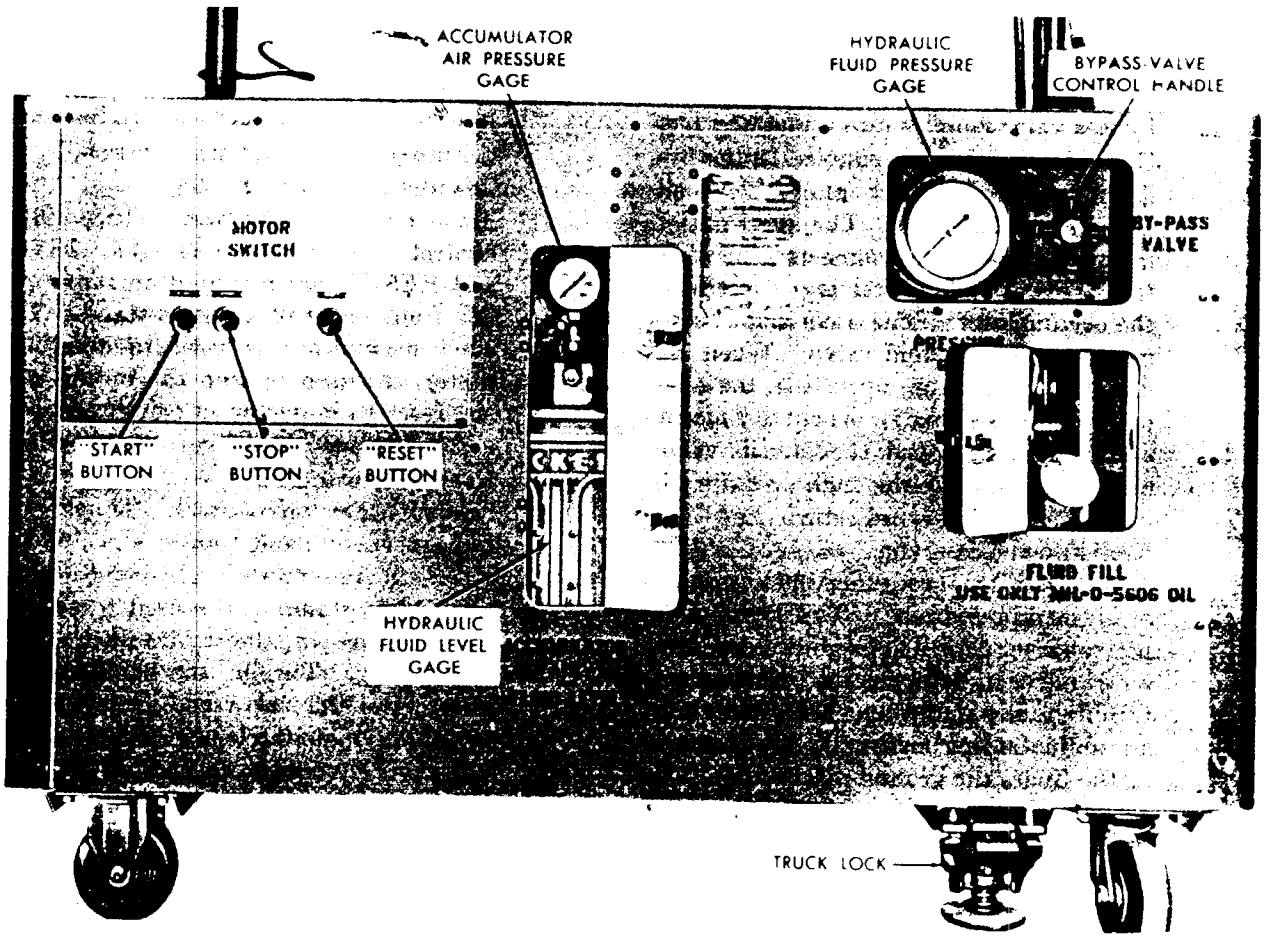


*Figure 98. Controls and indicators, hydraulic test stand.*

## Section IV. MISCELLANEOUS

### 60. Tools

Tools are issued to perform the following:

*a.* Missile and booster uncrating.
*b.* Propulsion system checkout.
*c.* Guidance section checkout.
*d.* Forward and aft section assembly.
*e.* Fin installation.
*f.* Missile checkout.
*g.* Missile pressurization.
*h.* Detonating cord installation.
*i.* Component replacement.
*j.* Booster assembly.
*k.* Missile and booster joining.
*l.* Propellant filling.
*m.* Fuel draining.
*n.* Oxidizer draining.
*o.* Warhead installation.

### 61. Missile Battery Charging Rack

(fig. 99)

*a. General Description.* The missile battery charging rack consists essentially of a table-type structure, a battery-support superstructure, a main control panel, 52 individual battery control panels, and a fast and slow charger. It is used in the assembly and service area to charge the missile

batteries. Provisions are made for both an initial charge (fast charge) and maintenance charge (float or trickle) of any one or all of 52 batteries. The battery charging rack weighs approximately 300 pounds without the batteries.

*b. Table-Type Structure.* This structure is the base of the battery charging rack. It is approximately 108 inches long, 40 inches wide, and 33 inches high. It is supported by six removable wooden legs. A stainless-steel surfaced working area is provided on the table top between the battery-support superstructure centered on the table and the edge of the table.

*c. Battery-Support Superstructure.* The battery-support superstructure, 23 by 92 inches, is centered on the top of the table-type structure. The superstructure is designed to support 26 missile batteries in two rows of 13 each. The other 26 batteries are positioned in two rows on the table-type structure below the two rows of batteries on the superstructure. The controls for charging all 52 batteries are located on the superstructure.

*d. Main Control Panel.* The main control panel assembly, 12 by 15 inches, is located on one end of the superstructure. The panel houses a voltmeter, an ammeter, a 3-position meter selector switch (FLOAT, OFF, and FAST), two 117-volt, 60-cycle, 50-ampere ac, double-pole circuit breakers (fast and float), and two charging circuit indicator lights (fast and float).

*e. Individual Battery Control Panels.* Each of the 52 battery positions has an individual battery control panel. The battery control panel houses a FAST-FLOAT selector switch, two indicator lights marked FAST and FLOAT, and two terminal posts marked + and — to which the battery leads are attached.

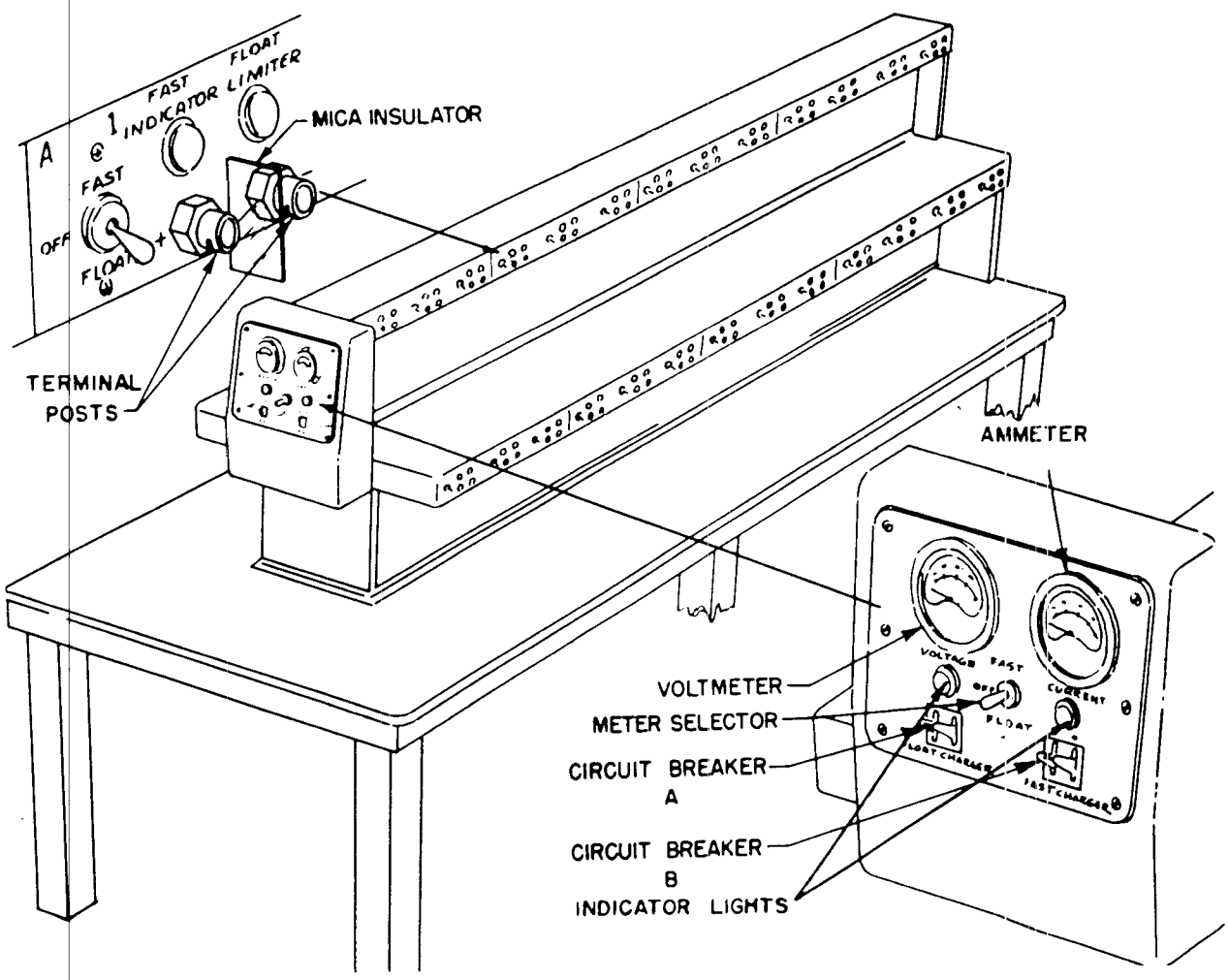


*Figure 99. Missile battery charging rack.*

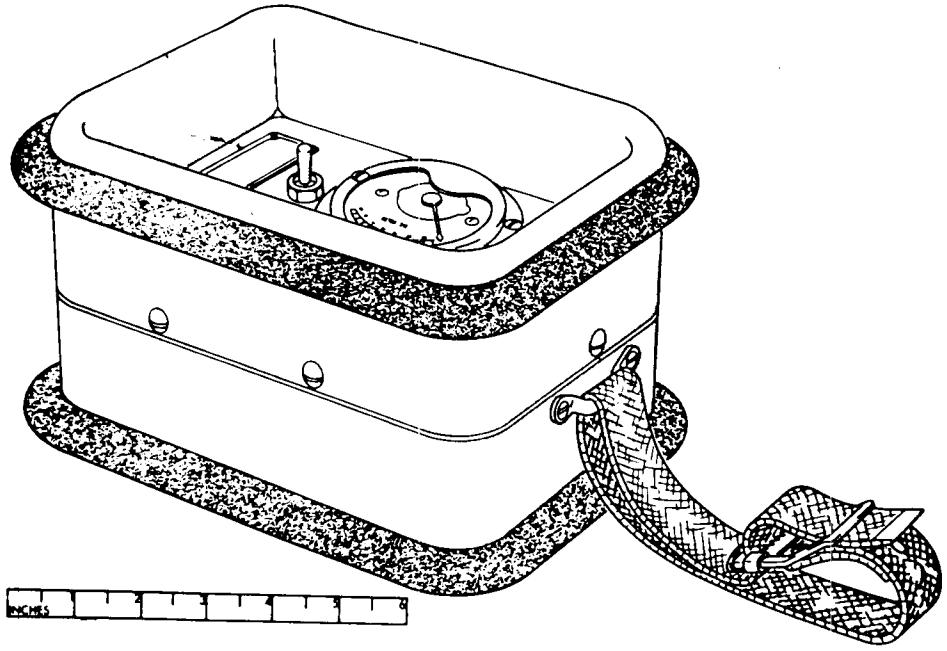


*Figure 100. Battery tester.*

*f. Battery Chargers.* Two battery chargers, one for fast charge and one for float charge, are provided with the charging rack. The chargers sit on the floor under the table. The fast charger has a constant output potential of 37.3 volts dc and the slow charger 33.4 volts dc (+1 percent). See TM 11–989 for a detailed description and instructions for operation.

*g. Battery Tester* (fig. 100). A battery tester is provided with the battery charging rack. The tester is not a built-in part of the rack. See TM 11–5069 for a detailed description and instructions for operation.

*h. Battery Filling Syringe.* A hypodermic type syringe is used to fill the batteries. See TM 11–5539 for filling instructions.

## 62. Hydraulic Fluid Transfer Pump
(fig. 102)

The hydraulic fluid transfer pump, used to transfer hydraulic fluid from the shipping barrel to the reservoir in the hydraulic test stand, consists of a crank-operated pump, a straight or tapered bung, 40 inches of 1-inch diameter suction pipe, 12 inches of 1-inch diameter discharge pipe, with a hose holder, and 8 inches of ¾-inch diameter lined hose with a bronze nozzle. The pump has a capacity of 10 gallons per minute.

## 63. Booster Igniter Circuit Tester
(fig. 103)

*a. Description.* The booster igniter circuit tester, referred to as the squib tester, is used in both the assembly and test area and the launching area. In the assembly and test area, it is used to check the resistance of the booster igniter and the continuity of the booster electrical circuit. At the launchers, it is used to check the continuity of the launcher firing circuit, and for the absence of stray ac or dc voltages in the firing circuit between the launching section panel and the launcher prior to connecting the booster squib. The tester consists of a meter, a meter test switch, a five-way selector switch, and 3 interconnecting cables. The low output voltage of a silver chloride battery is used in making the continuity checks. The tester case is 10½ inches by 7 inches by 2½ inches.

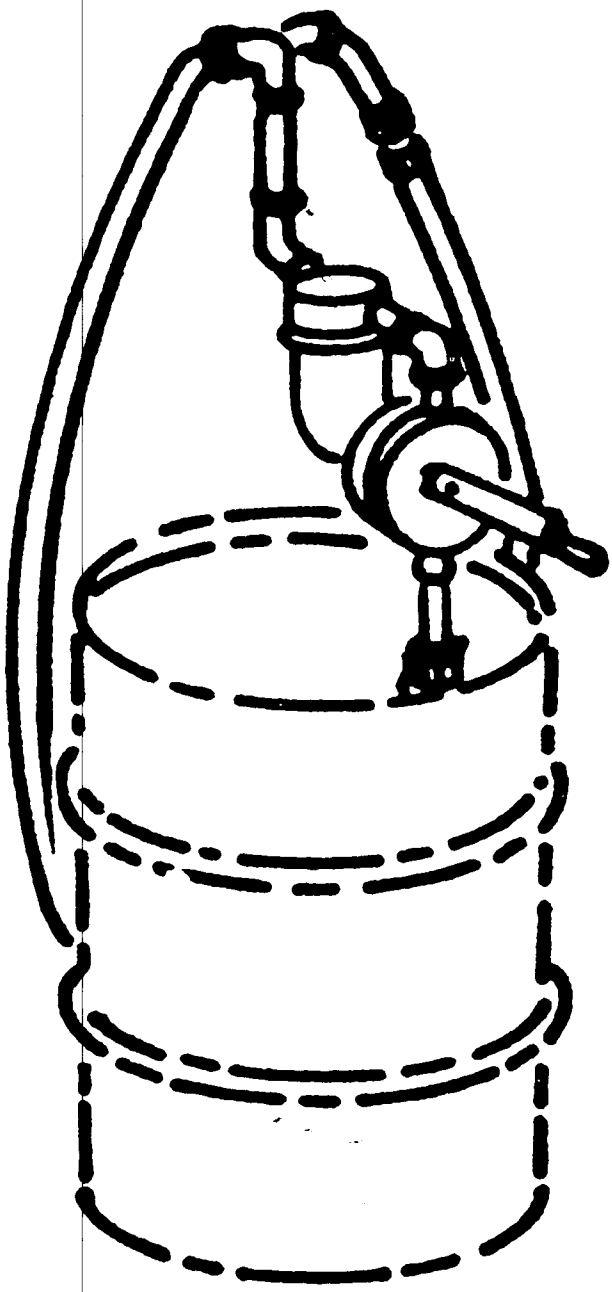

*Figure 102. Hydraulic fluid transfer pump.*

*b. Controls and Indicators.*

(1) Meter. Two types of meters are used. On one type, the scale is graduated from 0 to 1. A conversion chart, fastened on the inside of the test case cover, is used to interpret the meter readings. On the other, the upper scale is graduated from 0 to infinity (ohms), and the lower scale for 0 to 25 (volts).

(2) Meter test switch. The low output of a silver chloride battery is used to make the continuity checks. When the meter test switch is depressed, the meter indicates whether the battery is satisfactory for testing purposes.

(3) Selector switch. The setting of this five-position switch determines which check or test is being made. In the IGNITER CONT position, the continuity of the booster igniter is checked. In the BOOSTER CONT position, the continuity of the booster electrical circuit is checked. In LAUNCHER DC, the firing circuit between the launcher and the launching section panel is checked to insure there is no dc voltage present. In LAUNCHER AC, the firing circuit between the launcher and the launching section panel is checked to insure there is no ac voltage present. Since the squib is electrically fired, the presence of ac or dc voltages could cause a premature firing of the round. In the LAUNCHER CONT position, the continuity of the firing circuit is checked. Since the silver chloride battery is in the circuit when the selector switch is in either of the continuity positions, this switch should always be left in the LAUNCHER AC or LAUNCHER DC position when not being used for making an actual test.

*c. Cables.* Three cables, each 4 feet long, are provided to connect the tester to the igniter, booster, or launcher, when the tests are being made.

(1) The cable marked LAUNCHER is connected to the squib receptacle at the launcher when making launcher ac, dc, or continuity checks.

(2) The cable marked BOOSTER is connected to the electric plug in the head of the booster when making the booster continuity check.

(3) The cable marked IGNITER is connected to the igniter when making the igniter continuity check.

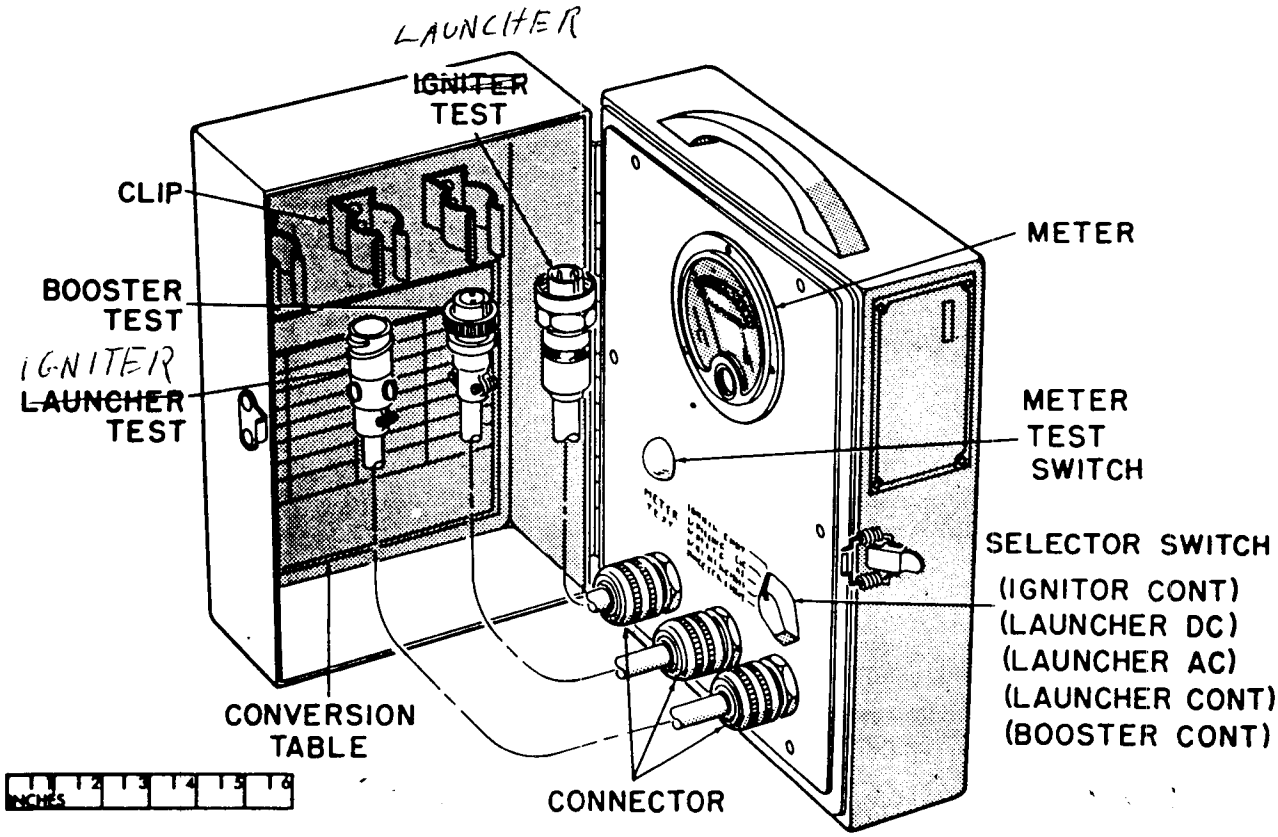


*Figure 103. Booster igniter circuit tester.* (SC2C 7 14)

# CHAPTER 4
# ENGINE GENERATORS

## Section I. DESCRIPTION AND DATA

### 64. Power Sources

Power sources for the NIKE system are:

*a.* 30 kw, 400 cycle, gasoline engine driven generator.

*b.* 45 kw, 400 cycle, diesel engine driven generator.

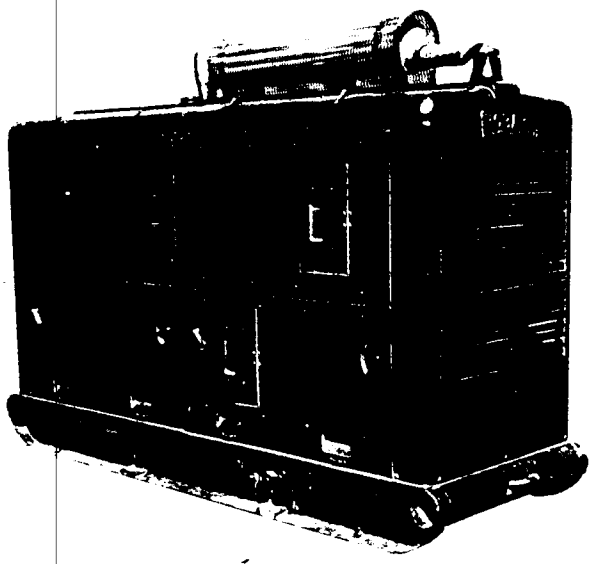

*Figure 104. Engine-driven generator.*

*c.* 45 kw, 60 cycle, diesel engine driven generator.

*d.* 150 kw, 60 cycle, diesel driven generator.

*e.* 30 kw frequency changer (converter).

*f.* 15 kw frequency changer (converter).

*g.* Drum switch.

### 65. Operating Instructions

Operating instructions for each power source listed in paragraph 64*a* through *d* are contained in the handbook issued with the equipment. The instructions for operating the drum switch are contained on the inside of the cover. The type of equipment that will be issued to any particular unit will depend upon its location and available supplies.

66. Rescinded.
67. Rescinded.
68. Rescinded.
69. Rescinded.
70. Rescinded.
71. Rescinded.
72. Rescinded.
73. Rescinded.
74. Rescinded.
75. Rescinded.

(Material on pages 133 through 136 is deleted.)

## 76. No-Load Frequency and Voltage Requirements

*a. Generator Output Requirements.* Characteristics of engine generators are such that no two may be expected to perform exactly alike under similar conditions. The frequency and voltage requirements are very critical for proper operation of the Nike I system. The generator output values will decrease when the full load is applied. Therefore, it is mandatory that the no-load value be carefully determined for each battery control area generator. These no-load values should be recorded at the generator concerned so that they are immediately available at all times to the operator. Each generator must be adjusted for its own full-load value.

*b. Battery Control Area Loads.* One of the generators in the battery control area supplies 400-cycle, 208-volt power for the battery control trailer, the acquisition radar, and the maintenance and spares trailer. The other generator supplies power to the radar control trailer.

*c. Launching Area.* The load requirements in the launching area are such that it is not necessary to determine no-load values. Adjust the generators in the launching area for 400-cycle, 208-volt output before depressing the main power ON pushbutton.

## 77. Determining No-Load Values

*a.* As soon as the Nike I system has been emplaced and can be placed in the red status, the battery commander commands DETERMINE NO-LOADS VALUES.

*b.* The section chief in the battery control trailer and in the radar control trailer each establish communications with their generator operator.

*c.* Each section chief commands PREPARE TO DETERMINE NO-LOAD VALUES.

*d.* Each generator operator:

(1) Checks the power cable.

(2) Depresses the main switch STOP pushbutton.

(3) Performs the prestarting checks on his generator.

(4) Turns the FIELD RHEOSTAT fully counterclockwise.

(5) Operates the VOLTAGE REGULATOR switch to OFF.

(6) Operates the UNIT-PARALLEL switch to UNIT.

(7) Operates the LOCAL-REMOTE switch to LOCAL.

(8) Zero-checks and sets the amperage, voltage, and wattage meters after the generator is started.

*e.* Each chief of section insures that all power switches in or on the equipment in his section are in the OFF position.

*f.* Each generator operator starts his engine and allows it to warm up to operating temperature (160° F. to 180° F.).

*g.* Each generator operator, using the engine speed controls, adjusts the engine speed to obtain a reading of 410 to 412 cycles on the FREQUENCY METER.

*h.* Each generator operator adjusts the FIELD RHEOSTAT to obtain a reading of 210 to 212 volts on the AC VOLTMETER

*i.* Each chief of section commands MAIN POWER ON.

*j.* Each generator operator turns the VOLTAGE REGULATOR switch to ON and then depresses the MAIN POWER SWITCH ON pushbutton.

*k.* Each generator operator operates the LOCAL-REMOTE switch to REMOTE.

*l.* Each generator operator reports to his section chief READY TO ADJUST.

*m.* The chief of section operates the PHASE switch to PHASE C and adjusts the PHASE ADJUST control to obtain a reading of 120 volts on the line voltmeter.

*n.* Each chief of section applies the normal red alert load to the generator.

*o.* Each chief of section reports to his generator operator FULL LOAD APPLIED. ADJUST VOLTAGE AND FREQUENCY.

*p.* Each generator operator readjusts the engine speed with the appropriate ENGINE SPEED CONTROL to obtain a reading of 400 cycles on the generator FREQUENCY METER.

*q.* Each generator operator reports to his chief of section ADJUSTED, CHECK.

*r.* Each chief of section readjusts the RHEOSTAT to obtain 120 volts across PHASE C at the trailer.

*s.* Each chief of section commands READJUSTED HERE. CHECK THERE.

*t.* Repeat the above adjustment and check procedure until a reading of 400 cycles is obtained at the generator and 120 volts across phase C in the trailer.

*u.* Each chief of section then removes the load from the generator and commands LOAD REMOVED. READ AND RECORD FREQUENCY AND VOLTAGE.

*v.* Each generator operator records the frequency and voltage values at the generator after the load has been removed. *These are the no-load values.* Record these values on the left rear door of the generator opposite the particular load which the generator was carrying. Figure 106 is a suggested recording form.

*w.* Each chief of section reports to the battery control officer NO LOAD VALUES DETERMINED as soon as completed.

| LOAD | NO LOAD SETTING |
|---|---|
| BATTERY CONTROL TRAILER | FREQUENCY |
| | VOLTAGE |
| RADAR CONTROL TRAILER | FREQUENCY |
| | VOLTAGE |

*Figure 106. No-load recording form.*

78. Rescinded.
79. Rescinded.
80. Rescinded.

# CHAPTER 5
# CABLES AND COMMUNICATIONS

## Section I. CABLES

### 81. Description

The Nike I system is interconnected by 145 portable cable assemblies when four sections with four launchers per section are emplaced. Each cable assembly is permanently terminated in a plug connector. The assemblies are stored and transported on portable reels. Of the 145 cable assemblies, 43 are used in the battery control area, 58 in the launching control area, and 44 in the interarea cable system. When less than four sections with four launchers per section are deployed, the number of cables used in the launching area system will be less. Nine different types of cables are used. Table XLI shows the nine types and distribution for each. Table XLII shows the cable runs in the battery control area. Table XLIII shows the cable runs in the launching area. The interarea runs are included in Table XLII as runs 46, 47, and 48. The use of commercial facilities in ConUS installations may eliminate the need for emplacing all of the Nike I cables supplied with the equipment. This section, however, assumes all of the issued cables will have to be emplaced.

*Table XLI. Cable Assembly Data*

| Type | Length (feet) | System | | | Total | Use | Approx. Wt. (*) |
|---|---|---|---|---|---|---|---|
| | | BCA | LCA | I/A | | | |
| P26 | 125 | 18 | 22 | | 40 | Transmit power | 135 |
| D37 | 125 | 2 | 16 | | 18 | Transmit control data | 130 |
| | 250 | 6 | 20 | | 26 | | 220 |
| CX162/G | 1,000 | | | 32 | 32 | Telephone communication; transmit tactical control data. | 175 |
| CX1065/G | 1,320 | | | 12 | 12 | Transmit gyro preset information and dc indicating signals. | 140 |
| KS9882 | 125 | 2 | | | 2 | Transmit if and synchro-signals | 75 |
| | 250 | 3 | | | 3 | | 100 |
| D164189 | 250 | 1 | | | 1 | Transmit high voltage pulses | 100 |
| GA51185 | 125 | 1 | | | 1 | Transmit computer data | 120 |
| | 250 | 2 | | | 2 | | 200 |
| GA51186 | 250 | 2 | | | 2 | Transmit radar if data | 210 |
| GA51187 | 125 | 2 | | | 2 | Transmit synchro data | 170 |
| | 250 | 4 | | | 4 | | 275 |

*Reel and cable assembly.

*Table XLII. Battery Control Area Cable System*

| Run No. | No. rqr. | From— | To— | Cable type | Cable length (in feet) | Connector color |
|---|---|---|---|---|---|---|
| 1 | *5 | M & ST | BCTG | P26 | 125 | OLIVE DRAB |
| 2 | 1 | BCT J1 | BCTG | P26 | 125 | OLIVE DRAB |
| 3 | 1 | BCT J2 | BCTG | P26 | 125 | OLIVE DRAB |
| 4 | 2 | BCT J5 | AA J1 | P26 | 125 | LIGHT GREEN |
| 5 | 2 | BCT J4 | AA J1 | P26 | 125 | YELLOW |
| 6 | 1 | BCT J17 | RCT J3 | P26 | 125 | LIGHT GREEN |
| 8 | 1 | RCT J1 | RCTG | P26 | 125 | OLIVE DRAB |
| 9 | 1 | RCT J2 | RCTG | P26 | 125 | OLIVE DRAB |
| 10 | 2 | RCT J6 | MTR J18 | P26 | 125 | YELLOW |
| 11 | 2 | RCT J5 | TTR J18 | P26 | 125 | YELLOW/GRAY |
| 14 | 1 | BCT J3 | AA J2 | D37 | 250 | RED |
| 15 | 1 | BCT J16 | RCT J3 | D37 | 125 | RED |
| 16 | 1 | RCT J6 | MTR J20 | D37 | 250 | OLIVE DRAB |
| 17 | 1 | RCT J46 | TTR J20 | D37 | 250 | OLIVE DRAB/GRAY |
| 18 | 3 | RCT J7 | RFTS | D37 | 250 | OLIVE DRAB |
| 19 | 1 | BCT J13 | RCT J2 | D37 | 125 | RED |
| 23 | 1 | BCT J6 | AA J4 | KS–9882 | 250 | OLIVE DRAB |
| 24 | 1 | BCT J9 | RCT J41 | KS–9882 | 125 | OLIVE DRAB/YELLOW |
| 25 | 1 | BCT J8 | RCT J44 | KS–9882 | 125 | OLIVE DRAB/RED |
| 26 | 1 | RCT J9 | TTR J17 | KS–9882 | 250 | OLIVE DRAB/GRAY |
| 27 | 1 | RCT J8 | MTR J17 | KS–9882 | 250 | OLIVE DRAB |
| 30 | 1 | BCT J7 | AA J2 | D–164189 | 250 | OLIVE DRAB |
| 32 | 1 | BCT J2 | TTR J15 | GA–51185 | 250 | LIGHT BLUE/GRAY |
| 33 | 1 | BCT J20 | MTR J15 | GA–51185 | 250 | LIGHT BLUE |
| 34 | 1 | BCT J19 | RCT J4 | GA–51185 | 125 | ORANGE |
| 37 | 1 | RCT J11 | MTR J16 | GA–51186 | 250 | RED |
| 38 | 1 | RCT J12 | TTR J16 | GA–51186 | 250 | RED/GRAY |
| 40 | 1 | BCT J14 | RCT J43 | GA–51187 | 125 | LIGHT YELLOW/RED |
| 41 | 1 | BCT J11 | RCT J42 | GA–51187 | 125 | LIGHT YELLOW/RED |
| 42 | 1 | RCT J10 | MTR J19 | GA–51187 | 250 | LIGHT YELLOW |
| 43 | 1 | RCT J5 | MTR J21 | GA–51187 | 250 | LIGHT YELLOW |
| 44 | 1 | RCT J45 | TTR J19 | GA–51187 | 250 | LIGHT YELLOW/GRAY |
| 45 | 1 | RCT J7 | TTR J21 | GA–51187 | 250 | LIGHT YELLOW/GRAY |
| 46 | 12 | BCT J12 | LCT | CX–1065/G | 1, 320 | OLIVE DRAB |
| 47 | 16 | BCT J15 | LCT | CX–162/G | 1, 000 | OLIVE DRAB |
| 48 | 16 | BCT J18 | LCT | CX–162/G | 1, 000 | OLIVE DRAB |

*May be reduced to 2 in some cases.

*Table XLIII. Launching Area Cable System*

| Run No. | No. rqr. | From— | To— | Cable type | Cable length (in feet) | Connector color |
|---|---|---|---|---|---|---|
| 1 | 1 | LCT | LCTG | P26 | 125 | OLIVE DRAB |
| 2 | 1 | LSA | AEG | P26 | 125 | OLIVE DRAB |
| 3 | 1 | LSA | L 1 | P26 | 125 | OLIVE DRAB |
| 4 | 1 | LSA | L 2 | P26 | 125 | OLIVE DRAB |
| 5 | 1 | LSA | L 3 | P26 | 125 | OLIVE DRAB |
| 6 | 1 | LSA | L 4 | P26 | 125 | OLIVE DRAB |
| 7 | 1 | LSB | BEG | P26 | 125 | OLIVE DRAB |
| 8 | 1 | LSB | L 1 | P26 | 125 | OLIVE DRAB |
| 9 | 1 | LSB | L 2 | P26 | 125 | OLIVE DRAB |
| 10 | 1 | LSB | L 3 | P26 | 125 | OLIVE DRAB |
| 11 | 1 | LSB | L 4 | P26 | 125 | OLIVE DRAB |
| 12 | 1 | LSC | CEG | P26 | 125 | OLIVE DRAB |
| 13 | 1 | LSC | L 1 | P26 | 125 | OLIVE DRAB |
| 14 | 1 | LSC | L 2 | P26 | 125 | OLIVE DRAB |
| 15 | 1 | LSC | L 3 | P26 | 125 | OLIVE DRAB |
| 16 | 1 | LSC | L 4 | P26 | 125 | OLIVE DRAB |
| 17 | 1 | LSD | DEG | P26 | 125 | OLIVE DRAB |
| 18 | 1 | LSD | L 1 | P26 | 125 | OLIVE DRAB |
| 19 | 1 | LSD | L 2 | P26 | 125 | OLIVE DRAB |
| 20 | 1 | LSD | L 3 | P26 | 125 | OLIVE DRAB |
| 21 | 1 | LSD | L 4 | P26 | 125 | OLIVE DRAB |
| 22 | 1 | LCT | TR | P26 | 125 | OLIVE DRAB |
| 23 | 6 | LCT | LSA | D37 | 250 | LIGHT YELLOW |
| 24 | 4 | LCT | LSB | D37 | 250 | LIGHT YELLOW |
| 25 | 4 | LCT | LSC | D37 | 250 | LIGHT YELLOW |
| 26 | 6 | LCT | LSD | D37 | 250 | LIGHT YELLOW |
| 27 | 1 | LSA | L 1 | D37 | 125 | RED |
| 28 | 1 | LSA | L 2 | D37 | 125 | RED |
| 29 | 1 | LSA | L 3 | D37 | 125 | RED |
| 30 | 1 | LSA | L 4 | D37 | 125 | RED |
| 31 | 1 | LSB | L 1 | D37 | 125 | RED |
| 32 | 1 | LSB | L 2 | D37 | 125 | RED |
| 33 | 1 | LSB | L 3 | D37 | 125 | RED |
| 34 | 1 | LSB | L 4 | D37 | 125 | RED |
| 35 | 1 | LSC | L 1 | D37 | 125 | RED |
| 36 | 1 | LSC | L 2 | D37 | 125 | RED |
| 37 | 1 | LSC | L 3 | D37 | 125 | RED |
| 38 | 1 | LSC | L 4 | D37 | 125 | RED |
| 39 | 1 | LSD | L 1 | D37 | 125 | RED |
| 40 | 1 | LSD | L 2 | D37 | 125 | RED |
| 41 | 1 | LSD | L 3 | D37 | 125 | RED |
| 42 | 1 | LSD | L 4 | D37 | 125 | RED |

*Note.* This table provides 4 sections with 4 launchers per section. Normally section D will not be included.

## 82. Sequence

The cable assemblies may be damaged if run over by a prime mover or other vehicle. The large number of cable runs, the possible lack of communications to all points, and the extensive area in which they will be emplaced, make it mandatory that no cables be emplaced until all vehicles have cleared the areas or until protection of cables at crossing points has been provided. This is best accomplished by having one person responsible for the emplacement. As will be noted in table XLIX as soon as the towed load has been uncoupled from a prime mover, the driver will drive his vehicle to the battery control area and report to the communications sergeant. The communications sergeant must have a sketch of the areas, showing the location of the equipment, the proposed cable runs, and the routes of ingress and egress. If a vehicle has no cable load, the sergeant will dispatch it to the motor pool. If it has a cable load, he will direct the driver to unload the cable reels at the unloading points (tables XLV and XLVI) and then proceed to the motor pool. Personnel at the unloading points will assist in unloading the cable reels. As soon as all cable reels are unloaded at any point, the emplacement crew can start emplacing the cable assemblies. This makes it mandatory for the communications sergeant to direct each driver to unload his cable reels only after all vehicles which will have to cross that run area have previously unloaded their reels. For example, if the exit route goes through the area in which the cable runs for launching section A will be emplaced, the cables for section A should not be unloaded until all vehicles have cleared the area. On the other hand, if the exit road does not require any vehicle to use section A's area, the cable reels may be unloaded as soon as the driver reports to the communications sergeant. The individual crews thus know that once the cable reels have been unloaded, they may proceed to emplace the cable runs at their convenience without danger of having them damaged from vehicular traffic. It also makes it possible to proceed with cable emplacement before all communications have been established.

## 83. Cable Identification

When cable systems are issued to a using organization, they will be color coded for identification. Each plug connector and its associated connector or receptacle is painted according to this color code. Column 7 of tables XLII and XLIII show the standard color coding used. Painting the run number on the receptacles and the run number and unloading point on each reel will facilitate emplacement.

## 84. Responsible Personnel

Table XLIV shows the personnel responsible for the emplacement and march order of all of the cable runs. Each chief of section of the section concerned will be in charge of the cable crew for his particular section. The crews will be organized into cable emplacement teams. Table XLIV shows the teams formed by each crew and the runs for which each team will be responsible. Personnel not assigned specific duties will be utilized to form additional cabling teams.

## 85. Unloading Points

To expedite loading and unloading, and to insure proper cable distribution, the cable reels must be unloaded at specific areas, called unloading points. Tables XLV and XLVI list these points and the reels to be unloaded at each. The reels should be loaded during march order with this in mind to reduce vehicular traffic to the absolute minimum. Runs 1, 4, 5, 10, 11, 18, 46, 47, and 48 in the battery control area and 23, 24, 25, and 26 in the launching area have more than one cable assembly in the complete run. The chief of section should direct the driver and unloading crew to unload the reels at approximate cable lengths along these runs.

*Table XLIV. Cable Teams*

| Personnel | Teams formed | Runs emplaced |
|---|---|---|
| | (Battery Control Area) | |
| Genr Oprs | One 2-man team | 1, 2, 3, 8, and 9 |
| BCT | Two 2-man teams: | |
| | Team 1 | 15, 19, 40, 41, 24, 25, 34 |
| | Team 2 | 6, 46, 47, 48 (See note 1.) |
| RCT | One 4-man team | 18 |
| | Two 2-man teams: | |
| | Team 1 | 10, 11 |
| | Team 2 | 26, 27 |
| MTR | One 4-man team | 16, 33, 42, 43, 37 |
| TTR | One 4-man team | 17, 32, 44, 45, 38 |
| Acq Radar (See note 2) | One 4-man team | 14 |
| | Two 2-man teams: | |
| | Team 1 | 4, 5 |
| | Team 2 | 30, 23 |
| | (Launching Area) | |
| LCT | One 4-man team | 22, 23, 24, 25, (26), 1 |
| Sec A (See notes 3 and 4) | Three 2-man teams: | |
| | Team 1 | 2, 3, 4 |
| | Team 2 | 5, (6), 27 |
| | Team 3 | 28, 29, (30) |
| Sec B (See notes 3 and 4) | Three 2-man teams: | |
| | Team 1 | 7, 8, 9 |
| | Team 2 | 10, (11), 31 |
| | Team 3 | 32, 33, (34) |
| Sec C (See notes 3 and 4) | Three 2-man teams: | |
| | Team 1 | 12, 13, 14 |
| | Team 2 | 15, (16), 35 |
| | Team 3 | 36, 37, (38) |
| Sec D (When deployed) | Three 2-man teams: | |
| | Team 1 | (17), (18), (19) |
| | Team 2 | (20), (21), (39) |
| | Team 3 | (40), (41), (42) |

Note 1. Runs 46, 47, and 48 are interarea cable runs.
2. Same personnel make up both teams.
3. Includes the section generator specialist.
4. Runs in parentheses are used only when employing 4 sections with 4 launchers per section.

*Table XLV. Battery Control Area Cable System Unloading Points*

| Unloading points | Color code | Run | Number of cables |
|---|---|---|---|
| Target-tracking radar | Light blue/gray | 32 | 1 |
| | Olive drab/gray | 17 | 1 |
| | Light yellow/gray | 44 | 1 |
| | Light yellow/gray | 45 | 1 |
| | Olive drab/gray | 26 | 1 |
| | Red/gray | 38 | 1 |
| | Yellow/gray | 11 | 2 |
| Missile-tracking radar | Olive drab | 16 | 1 |
| | Red | 37 | 1 |
| | Light yellow | 42 | 1 |
| | Light yellow | 43 | 1 |
| | Olive drab | 27 | 1 |
| | Light blue | 33 | 1 |
| | Yellow | 10 | 2 |
| Acquisition radar | Olive drab | 30 | 1 |
| | Red | 14 | 1 |
| | Olive drab | 23 | 1 |
| | Light green | 4 | 2 |
| | Yellow | 5 | 2 |
| Battery control trailer | Red | 15 | 1 |
| | Red | 19 | 1 |
| | Light yellow/red | 40 | 1 |
| | Light yellow/red | 41 | 1 |
| | Olive drab/yellow | 24 | 1 |
| | Olive drab/red | 25 | 1 |
| | Orange | 34 | 1 |
| | Light green | 6 | 1 |
| | Olive drab | *46 | 12 |
| | Olive drab | *47 | 16 |
| | Olive drab | *48 | 16 |
| Radar control trailer | Olive drab | 18 | 3 |
| Battery control engine generator | Olive drab | 1 | 5 |
| | Olive drab | 2 | 1 |
| | Olive drab | 3 | 1 |
| Radar control trailer engine generator | Olive drab | 8 | 1 |
| | Olive drab | 9 | 1 |

*Interarea cable runs.

*Table XLVI. Launching Area Cable System Unloading Points*

| Unloading points | Color code | Run | Number of cables |
|---|---|---|---|
| Launching control trailer | Light yellow | 23 | 6 |
| | Light yellow | 24 | 4 |
| | Light yellow | 25 | 4 |
| | Light yellow | *26 | 6 |
| Launching control trailer engine generator | Olive drab | 1 | 1 |
| Test responder | Olive drab | 22 | 1 |
| Launching section A | Olive drab | 2 | 1 |
| | Olive drab | 3 | 1 |
| | Olive drab | 4 | 1 |
| | Olive drab | 5 | 1 |
| | Olive drab | *6 | 1 |
| | Red | 27 | 1 |
| | Red | 28 | 1 |
| | Red | 29 | 1 |
| | Red | *30 | 1 |
| Launching section B | Olive drab | 7 | 1 |
| | Olive drab | 8 | 1 |
| | Olive drab | 9 | 1 |
| | Olive drab | 10 | 1 |
| | Olive drab | *11 | 1 |
| | Red | 31 | 1 |
| | Red | 32 | 1 |
| | Red | 33 | 1 |
| | Red | *34 | 1 |
| Launching section C | Olive drab | 12 | 1 |
| | Olive drab | 13 | 1 |
| | Olive drab | 14 | 1 |
| | Olive drab | 15 | 1 |
| | Olive drab | *16 | 1 |
| | Red | 35 | 1 |
| | Red | 36 | 1 |
| | Red | 37 | 1 |
| | Red | *38 | 1 |
| Launching section D* | Olive drab | *17 | 1 |
| | Olive drab | *18 | 1 |
| | Olive drab | *19 | 1 |
| | Olive drab | *20 | 1 |
| | Olive drab | *21 | 1 |
| | Red | *39 | 1 |
| | Red | *40 | 1 |
| | Red | *41 | 1 |
| | Red | *42 | 1 |

*Used only when 4 sections with 4 launchers per section are deployed.

## 86. Fall In

Upon completion of equipment emplacement and prior to orientation, synchronization, and collimation, the respective chiefs of sections will assemble their crews by commanding FALL IN FOR CABLE EMPLACEMENT.

Acquisition and computer personnel of the fire control platoon fall in in two ranks on the left of the battery control trailer. The generator operators for the two battery control area generators fall in as numbers 9 and 10 with the acquisition and computer personnel.

Tracking radar personnel of the fire control platoon fall in at the missile-tracking radar in two ranks.

The launching control trailer crew falls in on the left side of the launching control trailer. The launching control trailer generator operator falls in with this section as number 5.

Each launching section crew falls in at the section revetment.

Each launcher crew falls in to the rear of the number one launcher-loader assembly. The launching section generator operator falls in with the launcher crew as number 8.

## 87. Count Off

The crews being assembled, each CS commands COUNT OFF.

Crew members report their numbers in consecutive order.

## 88. Call Off

The crew being assembled, each CS commands CALL OFF.

*a. Acquisition and Computer Personnel.*
1 reports 1 of BC TEAM 1.
2 reports 2 of BC TEAM 1.
3 reports 1 of BC TEAM 2.
4 reports 2 of BC TEAM 2.
5 reports 1 of RCT TEAM.
6 reports 2 of RCT TEAM.
7 reports 3 of RCT TEAM.
8 reports 4 of RCT TEAM.
9 reports GENERATOR OPERATOR
10 reports GENERATOR OPERATOR

*b. Tracking Radar Personnel.*
1 reports TTR 1.
2 reports TTR 2.
3 reports TTR 3.
4 reports TTR 4.
5 reports MTR 1.
6 reports MTR 2.
7 reports MTR 3.
8 reports MTR 4.

*c. Launching Control Trailer.*
1 reports 1.
2 reports 2.
3 reports 3.
4 reports 4.

*d. Launching Section.*
1 reports 1.
2 reports 2.
3 reports 3.
4 reports 4.

*e. Launcher Crews.*
1 reports 1 of TEAM 1.
2 reports 2 of TEAM 1.
3 reports 1 of TEAM 2.
4 reports 2 of TEAM 2.
5 reports 1 of TEAM 3.
6 reports 2 of TEAM 3.

## 89. Emplace Cables

The crews being assembled and the team verified, each CS commands EMPLACE CABLES.

Each team emplaces the cable runs for which it is responsible as shown in table XLIV.

Team verifies cable reel is for particular run.

Team unreels approximately 50 feet of cable.

**1** unscrews the protective cover from the cable connector.

**2** unscrews the protective cover from the appropriate receptacle.

**1** and **2** insert and secure the cable connector into the receptacle.

**1** screws the cable connector and receptacle covers together.

Team unreels the cable in the direction of its terminus.

**1** and **2** coil excess cable in a figure-8 pattern.

**1** and **2** connect the cable to the terminal receptacle and screw the protective covers together.

Teams complete one run before starting another run.

Teams complete all runs as shown in table XLIV.

## 90. Connections

To connect cable assemblies together (in tandem) or to a receptacle:

Unscrew the protective cover from cable connectors and receptacle.

Inspect the collar of each receptacle to insure it is free from dirt, moisture, or foreign material.

Raise the cable until the cable connector is in alinement with the connector plug or receptacle.

Insert the plug into the receptacle.

Make sure the key and keyway are correctly alined.

Push the cable connector all the way into the receptacle. Do not move or jiggle from side to side.

Tighten the nut on the connector or receptacle with the cable wrench.

Screw the protective covers together tightly.

## 91. Protecting Cables

*a. Methods.* The method of protecting cables will depend largely upon the nature of the terrain. For most cases, cables should be completely buried to prevent damage from moisture or exposure above ground. In cold climates, correct burying will retard the freezing of cables to the ground. thereby preventing possible damage if the cables are taken up. If it is not possible to bury the cables, lay them in wooden troughs lined with straw or cut grass. Holes should be drilled in the troughs every 5 feet to insure proper drainage. If the use of troughs is not possible, the cables should be laid on straw or cut grass rather than directly on cold ground, snow, or ice.

*b. Burying Cables.* Cables should be buried in a trench at least 10 inches deep and wide enough to provide 4 inches of clearance on either side of the cable. The trench should be graded to a low point or sump to insure proper drainage. The bottom of the trench should contain a 6-inch layer of sand below the level of the cable. The cable itself should rest in a wooden trough. This trough should have drainage holes every 5 feet. Above the cable, the trench should be filled to within 2 inches of the top with sand or gravel. Above this, any material may be used. All cable junctions should be brought above ground level. Cables should slope downward from the couplings. The couplings and any cable above ground should be protected from the elements. Suitable barricades to prevent damage from vehicular traffic must be provided where necessary. Where it is necessary to drive vehicles over a cable, additional protection should be provided by placing an inverted V-type trough or other similar device over the cable where it will be subject to pressure. These crossings should be distinctly marked. All cable emplacements should be clearly marked to expedite removing the cables. When possible the trenches should be run at a slope and in high enough ground to prevent them from acting as drainage ditches for the surrounding area. The low point of each trench should be provided with side drainage by constructing a right-angle trench and filling it with small rock or gravel to serve as a sump.

*c. Other Cases.* It may be impossible because of such things as terrain or weather to bury the cables. In such cases the cables should be laid in such a way that the best possible protection is provided. The direct rays of the sun and heat have a deteriorating effect on the rubber covering of the cables. For this reason, exposed cables should be protected from the sun by covering them with suitable material.

## 92. March Order

The same teams which emplaced the cable runs will put the cables on reels during march order. As shown in table XLIX all cables will be placed on reels before march ordering any of the trailers or launcher-loader assemblies. Each chief of section will report—CABLES ON REELS to the communications sergeant as soon as completed. The communication sergeant will then direct the prime mover drivers to load the cable reels on their prime movers. Reels should be loaded to expedite unloading at the various unloading points.

## 93. Disconnecting and Storing Cables

*a. Disconnecting.* To separate the plug from the receptacle, raise the cable with one hand until the cable is in alinement with the plug and receptacle. With the other hand, turn the round nut counterclockwise, using a cable wrench. After the nut is loose, grasp the cable plug and pull it out. *Do not pull on the cable.* If the plug does not come out, move it from left to right while simultaneously pulling it out. After the connection has been broken, replace the cover cap over the plug and receptacle. Make sure the gasket is in place in the cover. Tighten the caps to insure a waterproof and dustproof connection.

*b. Winding Cable on Reel.* Place the cable connector in the spring clip or in the well depression (depending on the type of reel provided) at the center of the reel. Lay the cable loosely in the drum depression and start the first few turns at the end of the reel. After completing the first



409893 O - 57 - 5

few turns, visually check to insure that the clipped cable connector is not strained. Continue to wind the cable in close even coils until the full length of the cable is on the reel. Fasten the loose end of the cable to the side of the reel.

*c. Cleaning.* All cables must be thoroughly cleaned before placing them on reels.

*d. Storing.* Store the reeled cable in a place protected from sunlight, dirt, and moisture.

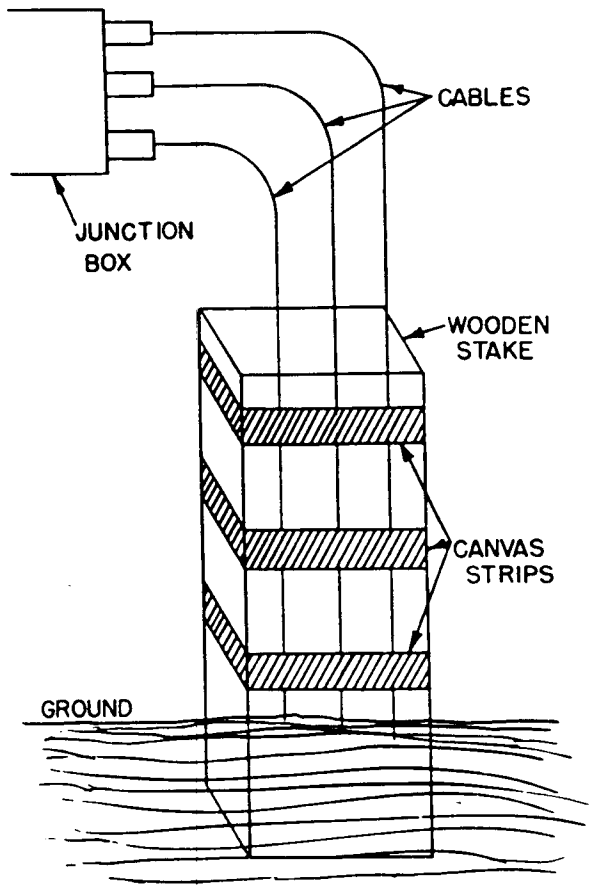


*Figure 107. Cable support.*

## 94. Care and Preservation

Cable systems are designed to require a minimum of attention and care. The following precautions should be observed.

*a.* Do not allow vehicles to run over exposed cables.

*b.* Cables will not withstand twisting and kinking. Avoid bending any cable on a short radius or allowing it to chafe against a moving object.

*c.* Support all cables at junction boxes and equipment receptacles as shown in figure 107.

*d.* Cables not in use should be wound on the reels provided and stored in a cool, dry, dark place.

*e.* Plugs and receptacles should not be dirty or rusty.

*f.* All plugs and receptacles should be kept closed with the covers provided when not in use. This will exclude dirt and moisture.

*g.* The locknut securing connected cables together should be tightened with the cable wrench provided to exclude dirt and moisture.

*h.* Connect covers together at each plug and receptacle to exclude dirt and moisture.

*i.* Pull on the body of the plug or receptacle when separating cables. *Do not pull on the cable or the spring.*

*j.* If it becomes necessary to drag a loose cable, pull on the cable and *not on the plug or receptacle.* Also pick up the plug so it will not drag on the floor or the ground.

*k.* Never connect a cable which has a dirty connector or which has been damaged by cuts or breaks.

*l.* Avoid getting petroleum products on the rubber parts of a cable. Petroleum products cause rubber to deteriorate.

# Section II. COMMUNICATIONS

## 95. Types

*a. TOE.* Three separate types of communications nets are used in the Nike I system—cable carried, field wire, and radio. The cable-carried net is the one normally used. The field wire and radio nets are for emergency use only. In addition to the three nets used for intrabattery and outside communications, a voice intercommunication system is provided between each launching section and its associated launcher-loaders. Switchboards are provided as an integral part of the battery control trailer and the launching control trailer.

*b. ConUS Installations.* Considering the static-type operations and the permanency of ConUS Nike installations, TOE cables will be used only where rights-of-way and terrain obstacles present no problem. In the majority of ConUS sites a Signal Corps fixed plant project with commercial maintenance will typify the cabling to be used.

## 96. Cable-Carried Net

The cable-carried telephone net is a normal telephone net except that lines built into the cable assemblies are used rather than field wire laid by the using unit. When the cable runs are emplaced, the cable-carried net will be established.

## 97. Field Wire Net

The field wire net is established as an auxiliary means of communications to be used when the cable-carried net is inoperative. The field wire lines are laid by the using organization. Standard military techniques and procedures apply.

## 98. Radio Net

The radio net is provided as an emergency communication system for use when both the cable-carried and field wire nets become inoperative. The radio net can be used with or without the launching control trailer.

## 99. Voice Intercommunication System

This intercommunication system provides facilities for voice communication between personnel in the launching section revetment and the launcher crews at the launcher-loader assemblies. The stations selected are controlled by a master switch on the launching section control panel. The system is used during testing and preparing a round on the launcher-loader assembly.

## 100. Hot Loops

A technical hot loop and a command hot loop are incorporated into the communication nets. These hot loops, automatically established during a yellow, blue, or red status, connect key personnel required for preparing and firing a round. The tactical information, such as number of missiles prepared, section selected, launcher designated, ready to fire, and fire are carried over other lines in the cable-carried system.

## 101. Switchboards

Two switchboards are provided as an integral part of the Nike I equipment. One is located in the battery control trailer, one in the launching control trailer. Each area switchboard has two series-connected SB-22/PT switchboards, mounted one on top of the other, with provisions for 29 lines. All voice communication lines going into or out of the battery control and launching areas go through their respective switchboard. A dummy plug is provided to be inserted into the technical and command hot loop jacks in each area switchboard. This plug prevents continuous keying of the remote control units by the ringing circuit when the communication system is in the radio mode of operation. Unless these two line jacks are used, the dummy plug should be left inserted in the cable, wire, and radio modes of operation.

## 102. Battery Control Trailer Switchboard Lines (figs. 108 and 109)

The following lines terminate at the battery control switchboard.

*a. Stations Normally Unattended.*
- (1) Three radar antenna locations (3 lines).
- (2) Maintenance and spares trailer and two engine generators (1 line).
- (3) Radar rf test set (1 line).

*b. Stations in the Battery Control Trailer.*
- (1) Battery control officer (1 line). Also has an emergency jack connected to the switchboard.
- (2) Computer operator (1 line).
- (3) Early warning plotting board operator (1 line).
- (4) Acquisition radar operator at the PPI (1 line).

*c. Stations in the Radar Control Trailer.*
- (1) Missile-tracking radar operator (1 line). Also has an emergency jack connected in parallel with this line.
- (2) Target-tracking radar azimuth operator (1 line).

*d. Trunks to Launching Control Trailer Switchboard.*
- (1) Cable-carried pairs (2 lines).
- (2) Cable-carried phantom circuit (1 line).
- (3) Field wire pairs (3 lines).

*e. Hot Loops.*
- (1) Command hot loop (1 line).
- (2) Technical hot loop (1 line).
- (3) Radio command hot loop (1 line).
- (4) Radio technical hot loop (1 line).

*f. External Trunks and Locals.*
- (1) Intelligence line to AAOC (1 line).
- (2) Operational control line to AAOC (1 line).
- (3) Command and administration line to battalion (1 line).

*g. Spares.* (5 lines).

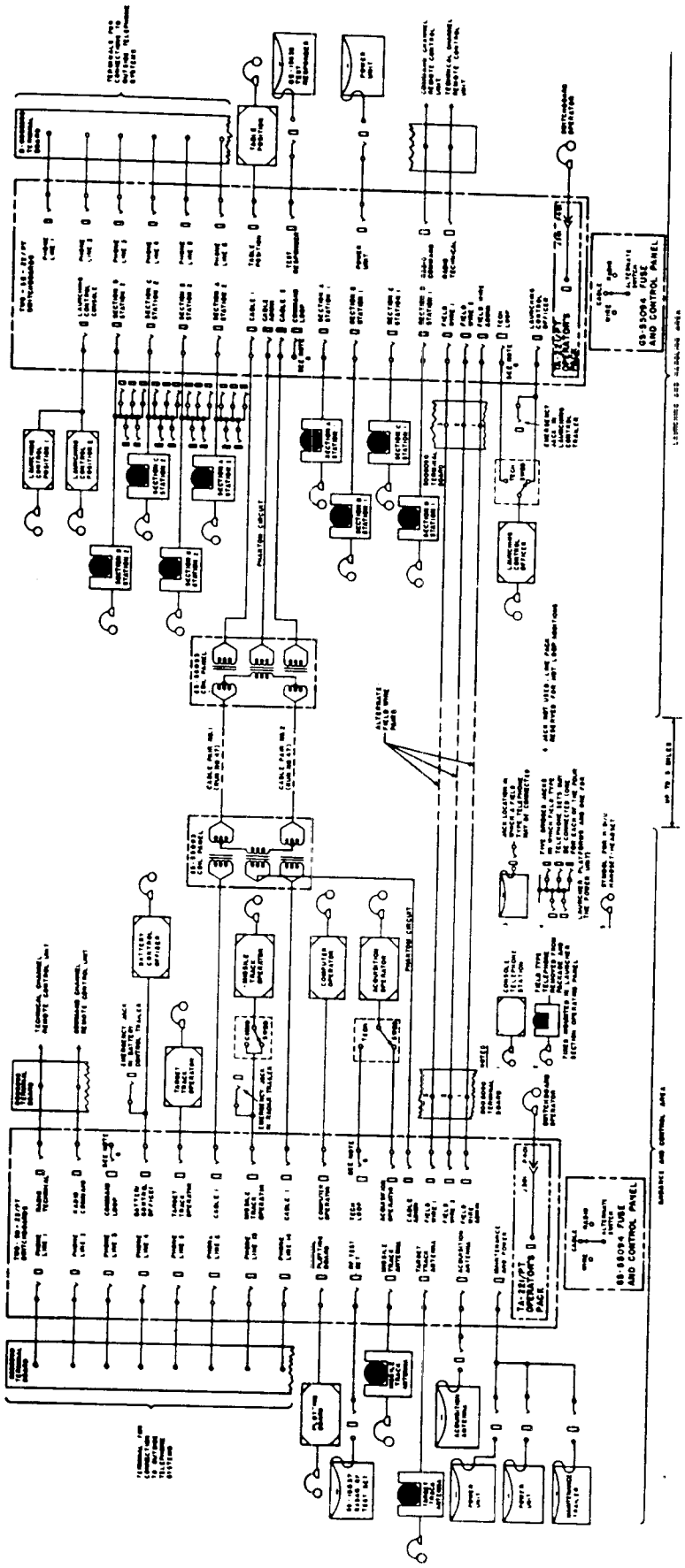

*Figure 108. Voice communication system white alert status.*

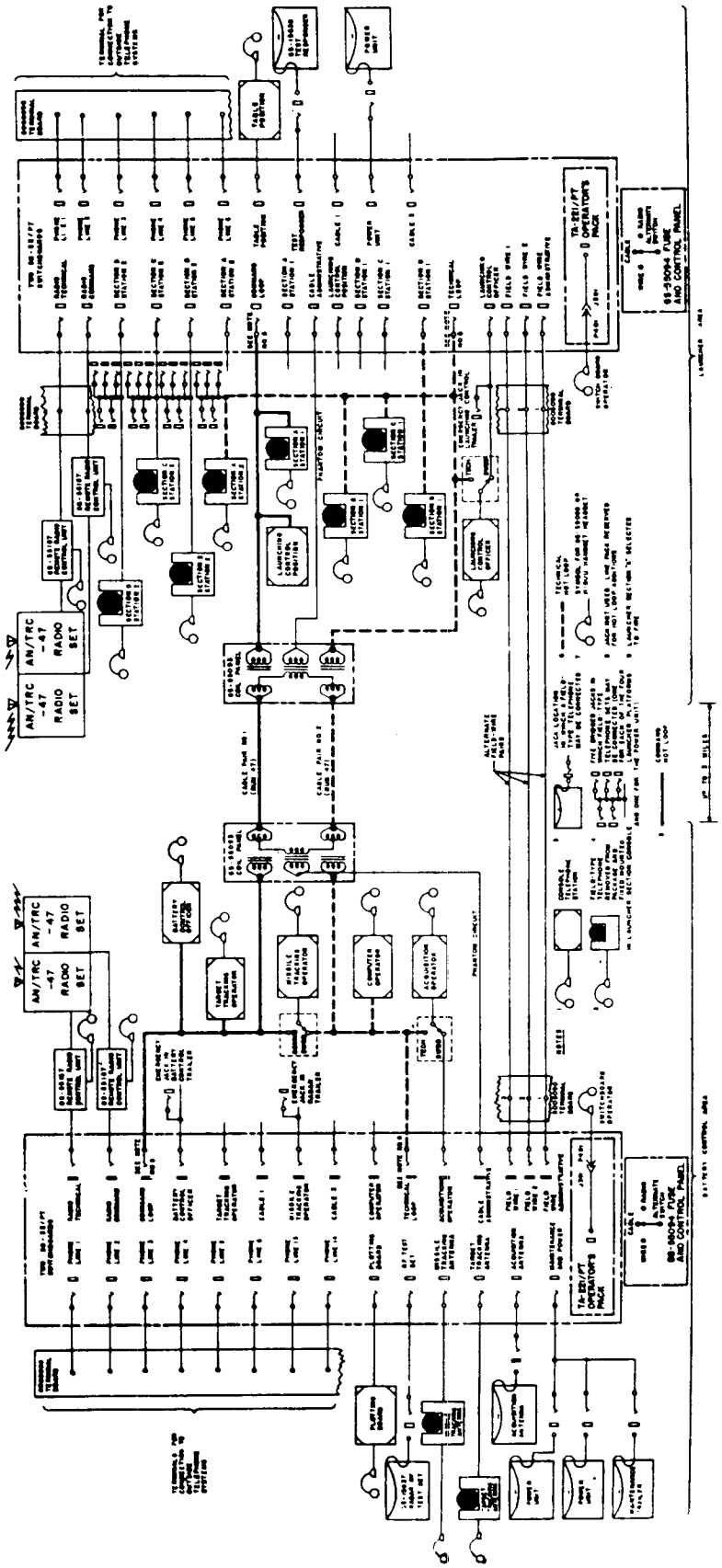


*Figure 109. Nike I voice communication system, yellow, blue, or red alert status.*

## 103. Launching Control Trailer Switchboard Lines

(figs. 108 and 109)

The following lines terminate at the launching control switchboard.

*a. Stations Normally Unattended.*

(1) Engine generator (1 line).

(2) Test responder (1 line).

*b. Stations in the Launching Control Trailer.*

(1) Launching control officer (1 line). Also has an emergency jack connected to the switchboard.

(2) Launching control panel (1 line).

(3) Utility table (1 line).

*c. Each Launching Section.*

Section control cabinet (2 lines).

*d. Trunks to Battery Control Trailer.*

(1) Cable-carried pairs (2 lines).

(2) Cable-carried phantom circuit (1 line).

(3) Field wire pairs (3 lines).

*e. Hot Loops.*

(1) Command hot loop (1 line).

(2) Technical hot loop (1 line).

(3) Radio command hot loop (1 line).

(4) Radio technical hot loop (1 line).

*f. Spares.* (6 lines).

## 104. Command Hot Loop

(fig. 109)

The following stations are included in the command hot loop.

*a.* Battery control officer in the battery control trailer.

*b.* Target-tracking radar azimuth operator.

*c.* Station 1 of the launching control console in the launching control trailer in yellow, blue, and red alert status.

*d.* Telephone station 1 of launching section selected.

*e.* Missile-tracking radar operator by operation of the TECH-COMMAND switch.

*f.* Battery control switchboard.

*g.* Launching control switchboard.

## 105. Technical Hot Loop

(fig. 109)

The following stations are included in the technical hot loop.

*a.* Computer operator.

*b.* Missile-tracking radar operator by operation of the TECH-COMMAND switch. Normally on the technical hot loop.

*c.* Telephone station 2 of each launching section selected.

*d.* Telephone station 1 of each launching section not selected.

*e.* Acquisition radar operator by means of the switchboard-technical switch.

*f.* Launching control officer in the launching control trailer by means of the switchboard-technical switch.

*g.* Battery control switchboard.

*h.* Launching control switchboard.

## 106. Installation

*a. Cable-Carried Net.* The lines required to establish the cable-carried telephone net are an integral part of the cable assemblies. When the cable runs are completed and all connections made the cable-carried net will be completed.

*b. Field Wire Net.* The field wire net completely supplements the cable-carried net. It is to be used when the cable carried net becomes inoperative. Therefore, this net should be laid over a completely different route than the cable runs. Standard military practices in field wire installation should be followed.

*c. Commercial.* Commercial facilities may be used in some installations. These will be installed by other than the using organization.

*d. Radio Net* (figs. 108 and 109). The radio net is to be used in event both the cable-carried and field wire nets become inoperative. Two radios, each containing two transmitters and two receivers, are provided at the battery control and the launching control trailers. Connections are made to the switchboards through the remote radio control units. The radio sets are attended by the radio operators. One radio net carries command hot loop information, the other technical hot loop information. When the interarea cable and field wire runs are inoperative, the radio link is established between the battery control trailer and the launching control trailer. Communications within the launching area continue to use the launching area field wire or cable-carried net. When the launching control trailer is out of action, the radio operator at the launching control trailer radio must remove the launching control trailer communication pairs from the LINE binding posts on both of the remote control units and replace the lines with two field wire pairs from each section on each control unit. The field wire pairs terminate on the other end in the telephone station at the

launching section control cabinet. This net establishes hot loops provided the alert status switch on the launching section control panel is manually switched to the yellow, blue, or red alert position. The radios shown in figures 108 and 109 are not necessarily those to be used by the battery, and are shown for illustrative purposes only.

## 107. Operation

To operate on the cable-carried net, the switchboard operator at the battery control switchboard and the launching control switchboard must *both* operate the WIRE-RADIO-CABLE switch to the CABLE position. To utilize the field wire net, the switches must *both* be operated to the WIRE position. When this is done, the command and technical hot loops are activated during the red, blue, or yellow alert status. The information normally carried over the tactical control circuits in the cable-carried net must now be relayed verbally over the command or technical hot loop circuits. To use the radio net, *both* switchboards operators must operate the three-position switches to RADIO. As in the use of the field wire nets, the tactical information must be relayed verbally over the hot loop circuits. In operating the radios and switchboards, standard military procedures should be used.

## 108. Intercomm System

One voice intercomm system is provided for each launching section. Each system consists of one master station located on the launching section control panel and a combination loudspeaker and microphone at each launcher-loader assembly. The controls, all located on the launching section panel, consist of one ON-OFF switch for each launcher (maximum of four), one TALK-LISTEN switch, one speaker level control switch, and one mike level indicator light. There are no controls at the launcher. To establish voice communications with any launcher crew, set the ON-OFF switch for that launcher crew to ON (up). To talk to the crew, set the TALK-LISTEN switch to TALK (up). More than one launcher crew can be included in the circuit if desired. The TALK-LISTEN switch should be in the LISTEN position at all times unless the launching section panel operator desires to talk to a launcher crew or crews. Prior to firing a round the ON-OFF switches should all be turned OFF (down) to reduce noise in the launching section revetment.

# CHAPTER 6

# OPERATION OF HEATING AND VENTILATING SYSTEMS

## Section I. EQUIPMENT-COOLING SYSTEM

### 109. Use

The equipment-cooling cabinet assembly is provided in the battery control trailer and the radar control trailer to maintain the vacuum tubes and other electrical equipment at the desired operating temperature. It consists of a blower assembly, the warning panel, intake and exhaust shutters, exhaust damper, and the associated flues and vents in the trailers (figs. 110, 111, and 112). The unit forces air around the various components in the trailers By adjusting the exhaust dampers and the intake and exhaust shutters, air may be drawn from inside or outside of the trailer as required by the temperature conditions.

### 110. Warning Panel
(fig. 113)

The warning panel contains the indicators and warning devices for the equipment-cooling assembly. Included are a thermometer to indicate the temperature of the air inside of the unit, a warning buzzer which may be shut off by operating the switch marked THROW SWITCH TO SILENCE BUZZER, and a warning light. The buzzer sounds and the light illuminates when the temperature in the unit exceeds approximately 140° F. The warning devices will continue in operation until the temperature drops below approximately 130° F. The system components within the trailers should never be operated when the light and or the buzzer or either are on, except in cases of emergency.

### 111. Operating Cooling Assembly

*a.* To apply power to the unit, turn both the main POWER switch and the EQUIP VENT switch on the back of the power control panel ON. The equipment switch is left in the ON position unless repairs are being made.

*b.* If the temperature is above 75° F., fully open the damper.

*c.* If the temperature is below 75° F., adjust the damper so that the gage on the warning panel reads as close to 75° as possible.

*d.* If the temperature is below minus 40° F., completely close the shutter and damper controls.

*e.* When the equipment is not in operation, the equipment-cooling intake and exhaust should be closed.

*f.* When the equipment is in operation, the unit should be running at all times to insure complete circulation of air within the components.

## Section II. PERSONNEL HEATING AND VENTILATING SYSTEM

### 112. Use

The personnel heating and ventilating cabinet assembly is provided to make working conditions for the operating personnel in the trailers more conducive to efficient sustained operation. The assembly consists of a personnel ventilating air system, a heater, a heater control unit, storage batteries for emergency operation, and battery charging equipment. Air distribution ducts extend the length of the trailer ceiling and floor (figs. 114–117). Grilled openings and air outlets provide for proper circulation of the air. The units in the battery control trailer, the radar control trailer, and the maintenance and spares trailer are similar. Each system has two motors, one for normal operation and one for emergency operation. The motor for normal operation is a 208-volt, 3-phase, 400-cycle motor. The emergency motor is a 24-volt, dc motor which derives its power from the storage batteries. See figure 117 for legend.

### 113. Operation, Heat Not Required

*a.* Adjust the upper damper control (personnel ventilating blower discharge) to the COOL position.

*b.* Adjust the intake damper to FRESH AIR.

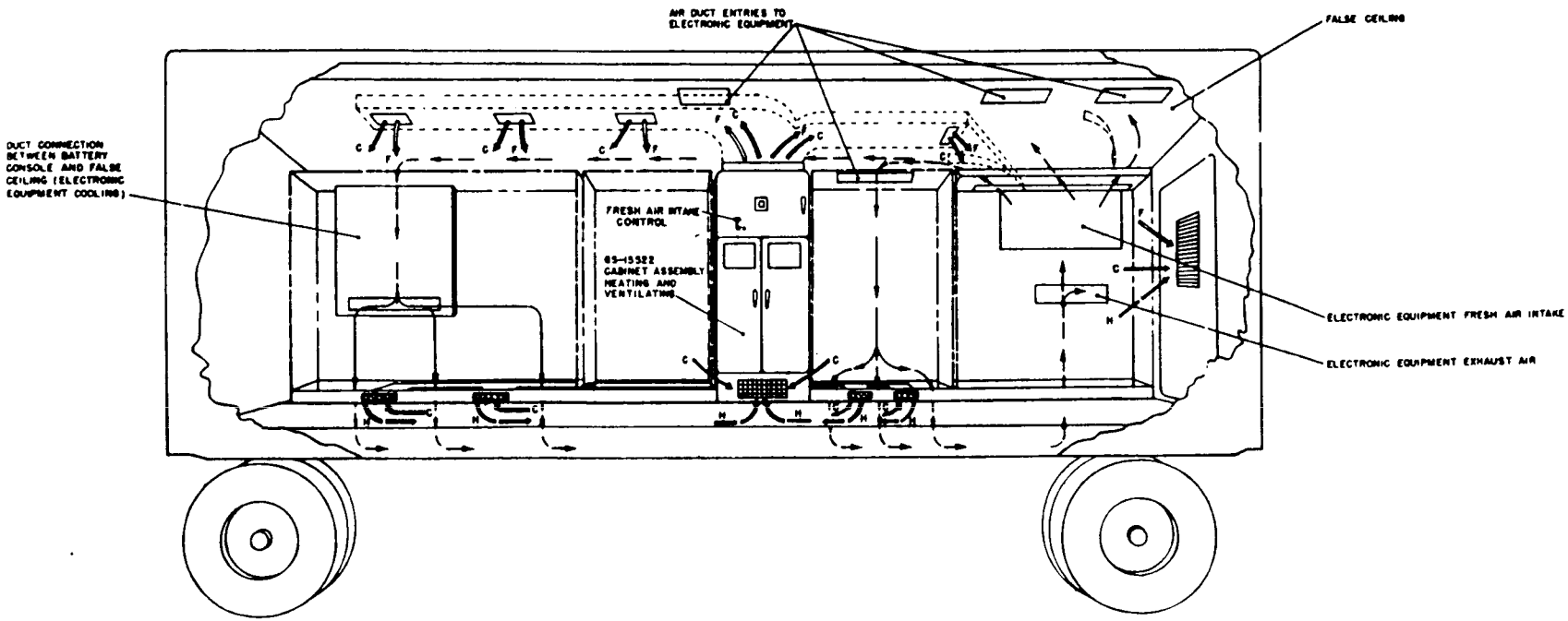


*Figure 110. Battery control trailer heating and ventilating systems, interior view (curbside).*

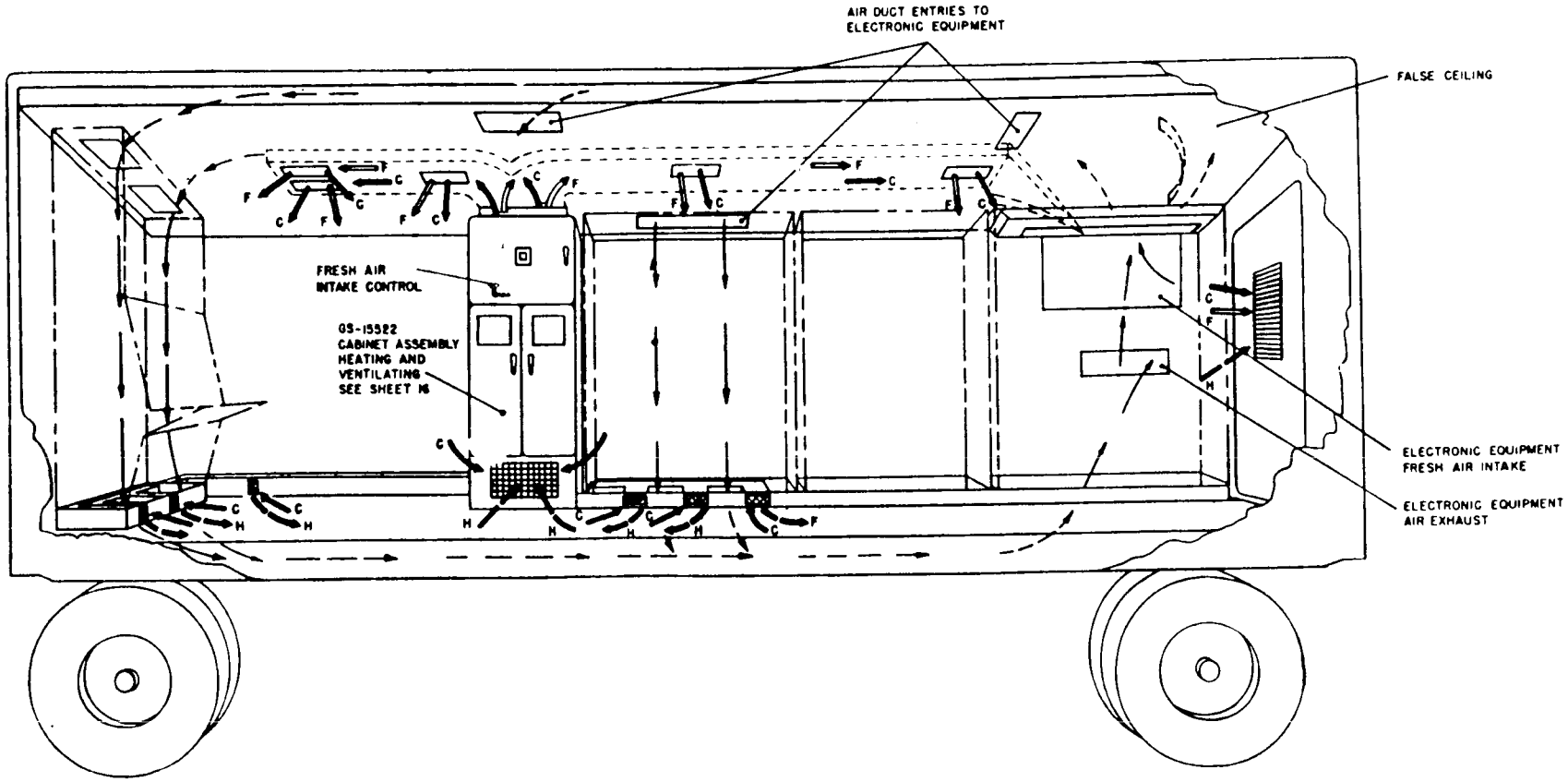


*Figure 111. Radar control trailer heating and ventilating systems, interior view (curbside).*

*c.* Turn the NORMAL VENT BLOWER switch to the ON position. The white normal vent blower light will illuminate.

*d.* Ascertain if air is being discharged through the ceiling ducts.

## 114. Operation, Heat Required

*a.* Adjust the upper damper control (personnel ventilating blower discharge) to the HEAT position.

*b.* Adjust the lower damper control (personnel ventilating blower intake) to position No. 1 if the temperature is above 60° F., to position No. 4 if it is 25° F. to 60° F., to position No. 5 if it is minus 20° F. to plus 25° F., and to position No. 6 if it is below minus 20° F.

***Caution:*** Do not set the control to position 7 while personnel are in the trailer. In this position, no fresh air is drawn from the outside. The air within the trailer is recirculated.

*c.* Turn the NORMAL VENT BLOWER switch to the OFF position.

*d.* Turn the HEATER switch to START.

(1) The white HEATER light will illuminate.

(2) The red PRIMER indicator light will illuminate.

*e.* Turn the OUTPUT switch to LOW.

*f.* Hold the PRIME switch in the ON position for 15 seconds. The heater should ignite.

*g.* After 2 minutes, check to see if the flame is visible through the sight tube on the heater head.

*h.* If the flame is not visible, repeat paragraphs *f* and *g* above. If the heater does not ignite after four attempts, maintenance adjustments are necessary.

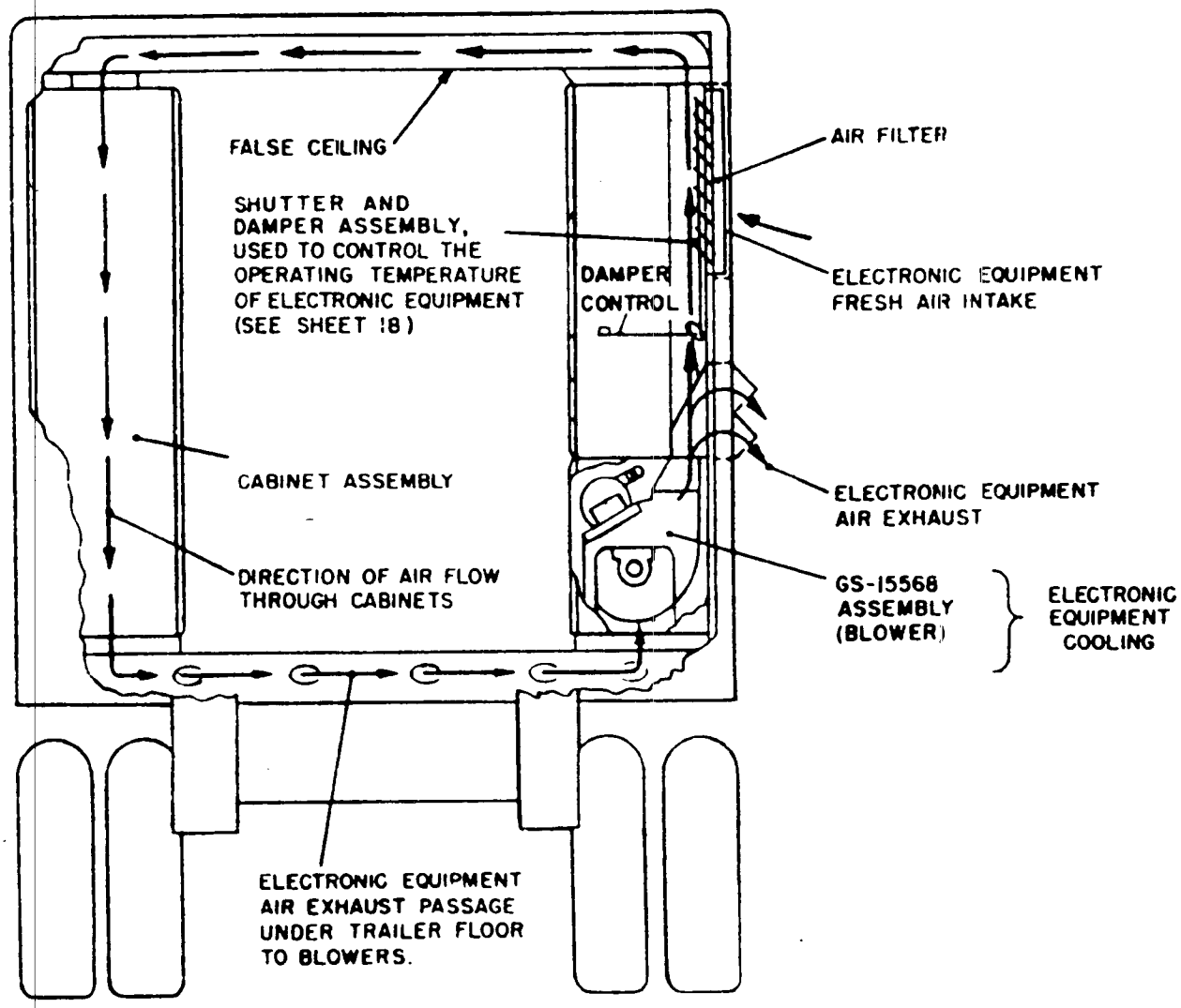


*Figure 112. Battery control and radar control trailers equipment-cooling system, (rear view).*

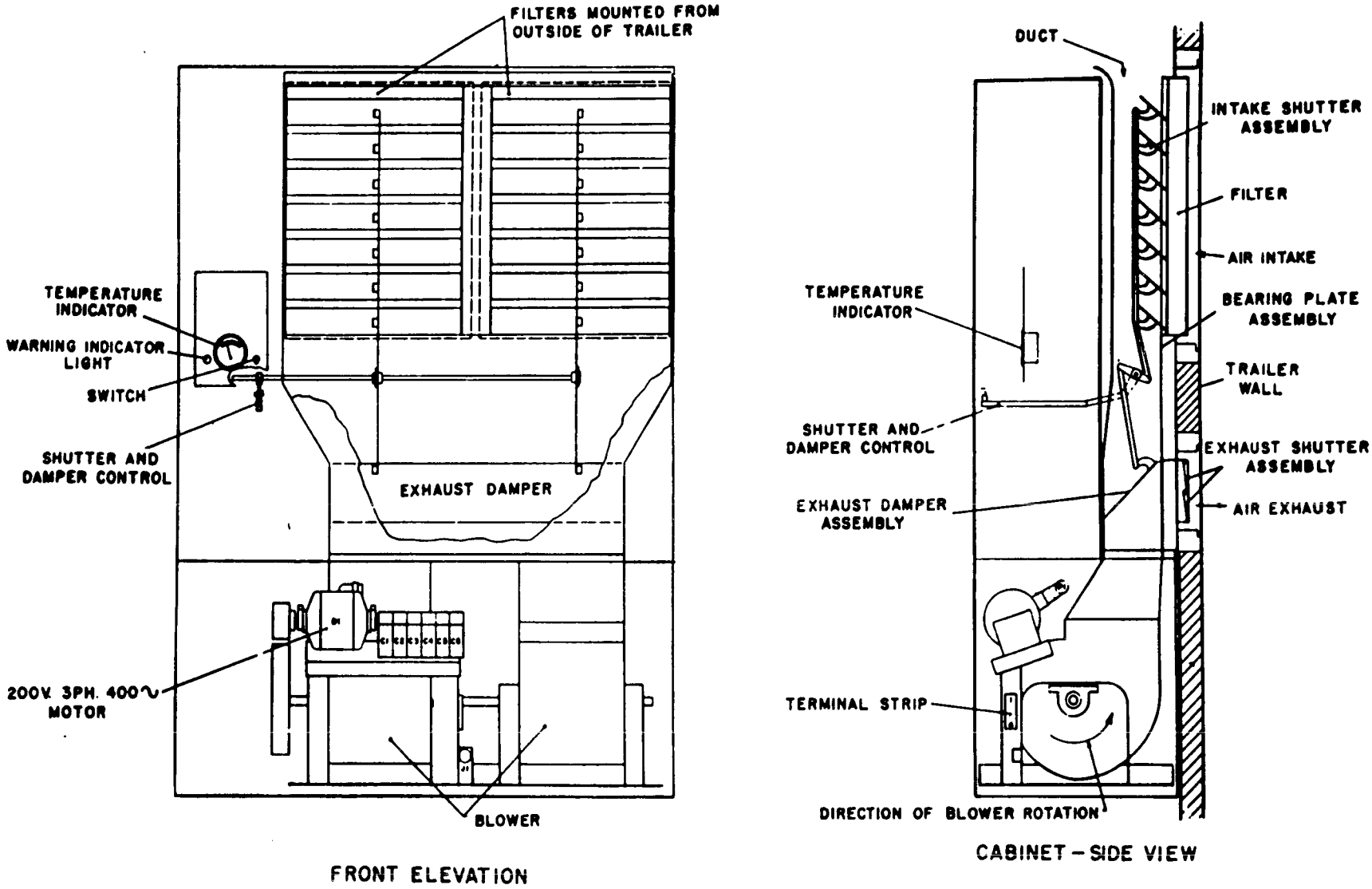


*Figure 113. Warning panel and shutter and damper controls.*

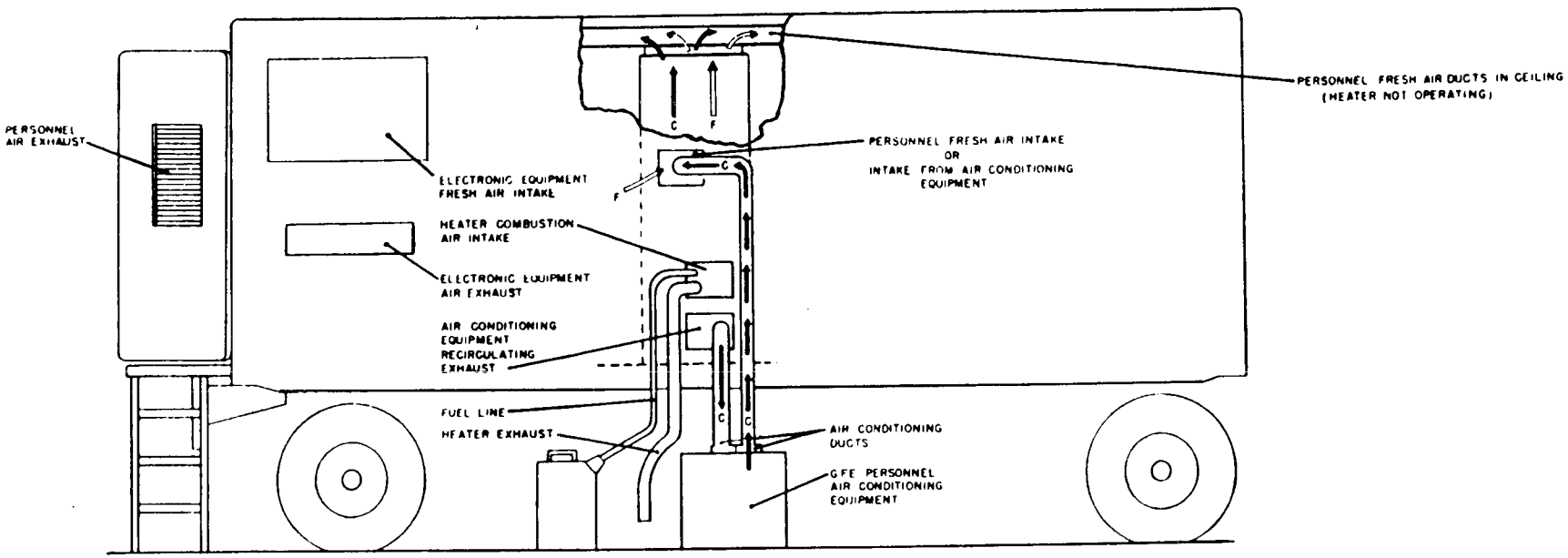


*Figure 114. Battery control trailer, rear view.*

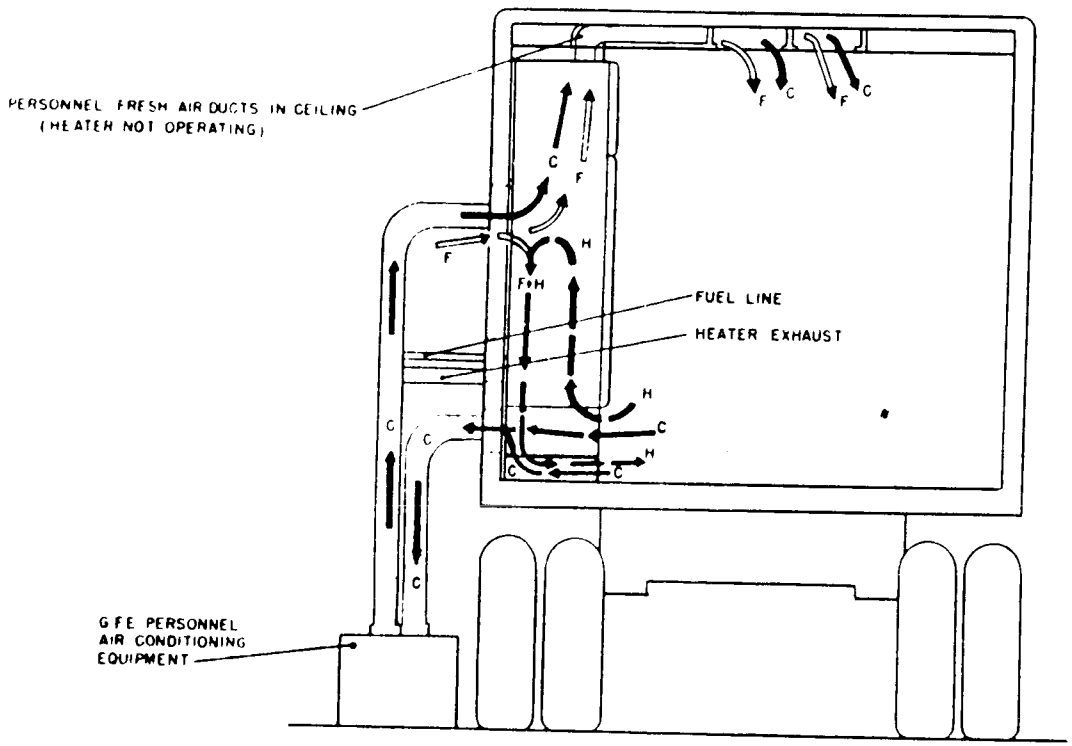


NOTE.-REQUIREMENT FOR AIR CONDITIONING
FRESH MAKE-UP AIR SHALL BE PROVIDED EITHER AT THE PERSONNEL AIR INTAKE OR AT THE RECIRCULATING EXHAUST CONNECTED TO THE AIR-CONDITIONING EQUIPMENT

LEGEND

F — INDICATES DIRECTION OF FRESH AIR FLOW, HEATER UNOPERATED, FRESH AIR INTAKE OPEN, NO RECIRCULATION. AIR IS EXHAUSTED AT REAR OF VAN.

H — INDICATES DIRECTION OF HEATED AIR FLOW, WITH HEATER IN OPERATION, TRAILER AIR IS RECIRCULATED THROUGH HEATER, WITH FRESH MAKE-UP AIR INTAKE CONTROLLED BY HEATER DAMPER SETTING. A QUANTITY OF AIR EQUIVALENT TO THE INTAKE OF FRESH MAKE-UP AIR, WILL BE EXHAUSTED AT REAR OF VAN.

C — INDICATES DIRECTION OF COOLED AIR FLOW, HEATER UNOPERATED, TRAILER AIR IS RECIRCULATED AND PASSED THROUGH AIR CONDITIONING EQUIPMENT FRESH MAKE-UP AIR PROVIDED AS PER NOTE

INDICATES DIRECTION OF AIR FLOW (ELECTRONIC EQUIPMENT COOLING)

INDICATES ELECTRONIC EQUIPMENT OUTLINES

PERSONNEL HEATING VENTS AND AIR CONDITIONING RETURN INTAKE

*Figure 115. Radar control trailer, rear view.*

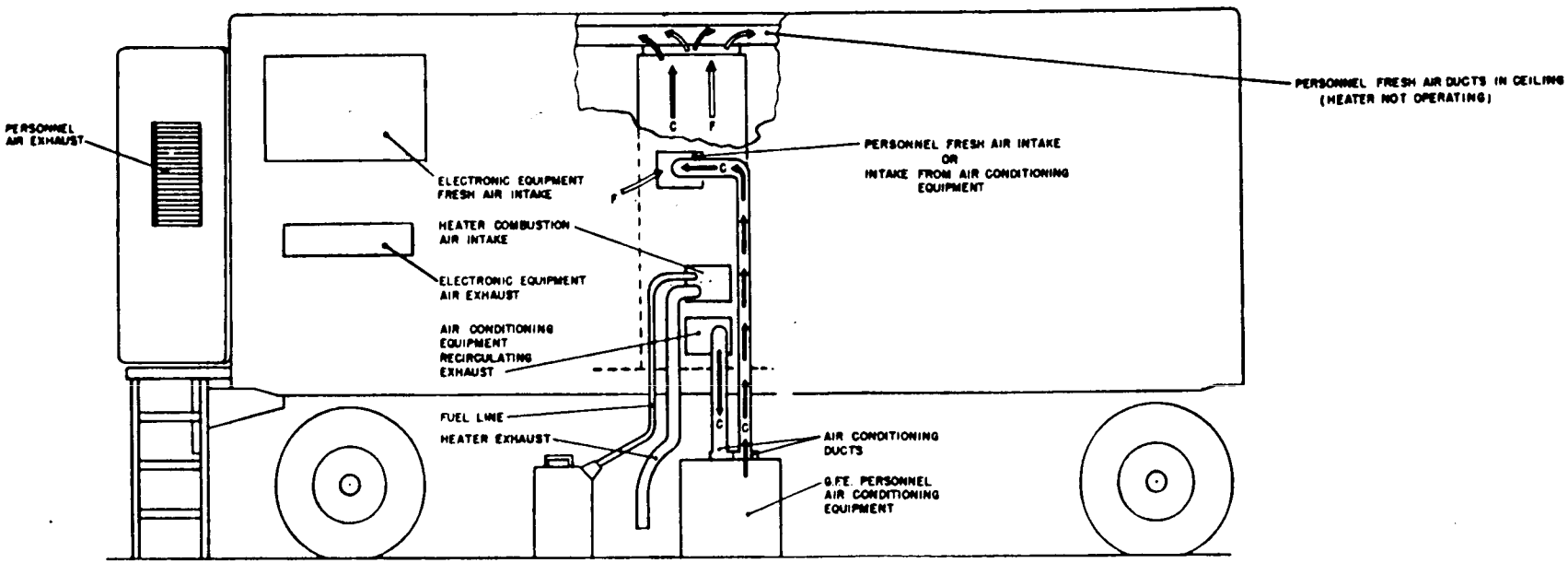


*Figure 116. Battery control and radar control trailers, curbside view.*

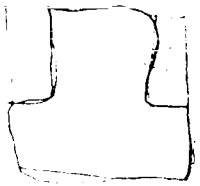

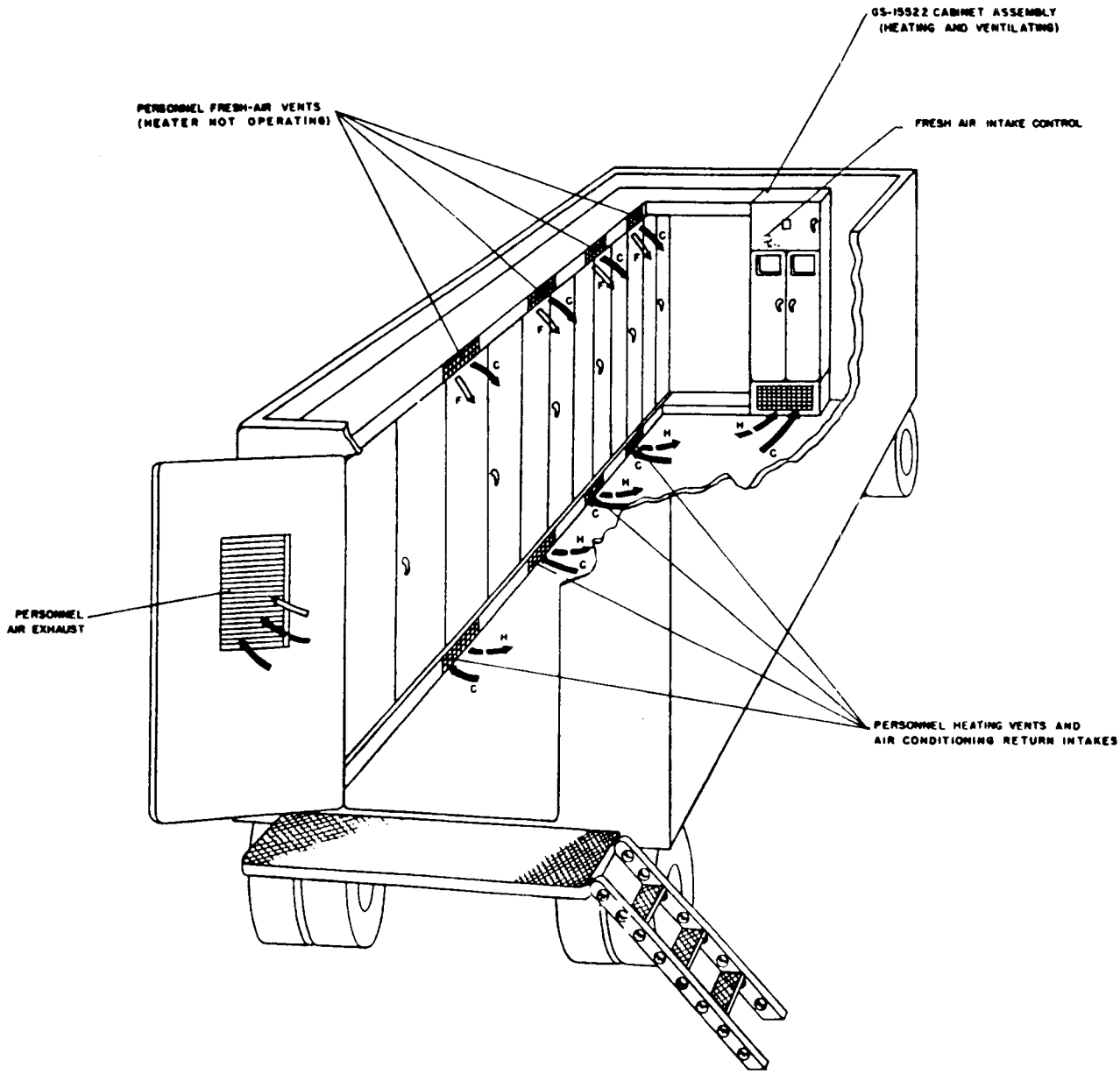


*Figure 117. Maintenance and spares trailer.*

*i.* After the heater is ignited, hold the PRIME switch in the ON position until the PRIME INDICATOR red light goes out.

*j.* Turn the HEATER switch to RUN.

*k.* Turn the NORMAL VENT BLOWER switch to ON.

## 115. Temperature Selection

To select the desired temperature, adjust the thermostat located on the upper door of the heating and ventilating cabinet assembly to the desired temperature. If the temperature is below zero degrees, or if faster heating is required, turn the output switch to HIGH.

## 116. Shutting Off Heater

To shut off the heater, turn the heater switch to OFF. The combustion blower will continue to operate until the burner cools.

***Caution:*** Keep the normal ventilating blower operating until the combustion blower stops running. Do not turn the main power switch OFF until after the normal ventilating blower has stopped running.

## 117. Preparing Heater for Operation

*a.* Release the spring-loaded fasteners which secure the cover on the heater fuel intake connections port.

*b.* Raise the hinged cover. Fasten it in the open position by installing the side brace clamped to the underside.

*c.* Remove the 6-foot flexible exhaust pipe from its transit position inside the trailer. (The exhaust pipe is on the roadside wall in the battery control and radar control trailers, and the curbside wall of the maintenance and spares trailer.)

*d.* Attach the exhaust pipe, hand tight, to the nipple inside the connections port.

*e.* Extend the free end of the exhaust pipe away and downwind from the personnel air intake ventilator.

*f.* Obtain the 15-foot fuel line from inside the trailer. The fuel line is in the utility cabinet of the battery control and the radar control trailers and in drawer 452 of the maintenance and spares trailer.

*g.* Fasten the swivel end of the fuel line to the bulkhead fittings inside the connections port.

*h.* Insert the other end of the fuel line into the fuel storage can. The storage can may be a 5-gallon gasoline can, or a 50-gallon drum. If a 50-gallon drum is used, the dip tube must be extended so that it will reach to the bottom of the drum. The level of the fuel can must be lower than the level of the heater to reduce fire hazards.

*i.* Check the electrolyte in the storage batteries.

*j.* Insure that the REFRIGERATION EXHAUST PORT is closed and the personnel FRESH AIR intake port is open.

## 117.1 ConUS Heaters

In ConUS units, the personnel heating and ventilating systems are not normally used in the battery control area trailers. Instead, a commercial heating and air conditioning unit is used in the winter and a van air conditioning refrigeration type unit is used in the summer. These units are located in the interconnecting structure which connects the battery control and radar control trailers. The spare parts storage cabinets are also located in the interconnecting structure.

# CHAPTER 7
# RECORDING SYSTEMS

## Section I. GENERAL

### 118. Systems

To aid the commander in determining the state of training of his unit, the most advantageous time to engage targets, and in making post-firing analyses, two recording systems have been incorporated into the Nike I system—a plotting board system and an event recording system.

### 119. Photographic Processing Machine

The event recorder uses a light-sensitive paper or film to record certain events. A photographic processing machine is provided to develop this record quickly and semiautomatically.

## Section II. PLOTTING BOARDS

### 120. Types

Three plotting boards are incorporated into the Nike I system—a manual early warning plotting board, an automatic horizontal plotting board, and an automatic altitude plotting board. All are located in the battery control trailer. The early warning plotting board is located on the forward roadside of the trailer. The two automatic plotting boards are located in a vertical position above and to the rear of the battery control console assembly. Plotting on the early warning plotting board is done manually with a china marking pencil. Plotting on each of the automatic plotting boards is accomplished by an electromechanical device using two motor-driven pens to convert target, missile, and predicted point of intercept electrical data, received from the computer, into a graphical display of present position of the target, missile, and the predicted point of intercept.

### 121. Early Warning Plotting Board

The early warning plotting board is used to plot early warning information. A telephone outlet is provided for the plotter. Azimuth lines and range circles are engraved on the plastic plotting surface. The scale factor is 1:500,000 (fig. 19). The maximum range circle represents 250,000 yards in range. A 10,000-meter grid system is printed on the material behind the plastic plotting surface. Other grid systems may be inserted between the plotting surface and the 10,000-meter grid surface.

### 122. Horizontal Plotting Board

*a. Description* (fig. 11). The horizontal plotting board is used to automatically plot missile, target, and predicted point of intercept position data. The usable plotting surface is 28.8 inches by 28.8 inches. The scale on the plotting board is 1:250,000. The entire plottiing area therefore represents a 200,000-yard square. This makes it possible to use a standard military map (1:250,000) as a background for the graphical presentation. Such things as restricted areas and other information of value to the battery control officer can be shown on this map. The surface of the plotting board is a clear plastic. Range circles and azimuth lines are engraved on the plastic. Lights that can be adjusted in intensity are mounted behind the plotting board. The plotting paper is placed over the plastic surface. A military map can be placed between the plotting paper and the plastic back. By varying the intensity of the lights, the information contained on the military map will show through the plotting paper, thus allowing the plotted data to be seen with respect to important ground points and areas.

*b. Plotting.* Plotting is done by two pens mounted on movable pen carriages. The pen carriages move up and down. The arms on which the pen carriages are mounted move horizontally. This makes it possible for either pen to plot in any part of the 200,000-yard square. The position of the pens is determined by information received from the computer. Prior to launching the missile, the pens plot the present

position of the target and of the predicted point of intercept in the $X$ and $Y$ coordinates. After launch the pens plot the present position of the missile and the present position of the target. During a plot the pens may automatically switch information plotted. This indicates that the plots of the two pens are crossing or if the plotting arms bump at the top of the board, instead of the pens touching, that each pen is blocking the other pen from continuing its plot. To enable both pens to continue plotting without an appreciable interruption in the plots, an interchange of pen data is automatically accomplished. This gives a continuous plot of both the missile and target position. Pen assignment indicators lights indicate the data each of the two plotting pens are plotting.

*c. Timing Marks and Fire Order.* In addition to the flight path of the missile and the target in the horizontal plane, time marks are recorded along each plot every 10 seconds (time marks), the time the fire order was given (fire order), and the point of origin of the coordinates (reference mark). Figure 118 shows the time and fire order

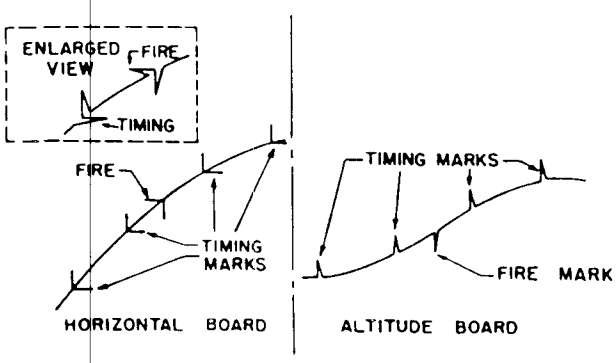


*Figure 118. Time and fire order marks.*

marks. Notice that the time marks are north and east while the fire order mark is south and west. The reference mark indicates the location of the target-tracking radar. This makes it possible to orient the plot record during later analysis.

## 123. Altitude Plotting Board

*a. Description* (fig. 12). The altitude plotting board (the smaller of the two automatic plotting boards) is located to the right of the horizontal plotting board. It is used to plot the altitude of the missile, target, and predicted intercept point against time. This plotting board, which is 9 inches high, is divided into two sections each 8 inches wide. The left section is labeled MISSILE, and the right TARGET. The bottom of each half of the plotting board represents the predicted time-to-intercept from 0 to (classified) seconds, with 0 seconds at the center of the board. The side of the plotting board represents altitude from 0 to (classified) feet. A reference system, consisting of a series of horizontal height lines and vertical time-to-intercept lines is engraved on the transparent plastic backboard. Lights of variable intensity are located behind the backboard. The lights are controlled by the altitude plotting lights control knob. The plotting paper is placed over the plastic backboard. The dead zone (classified) is engraved on the backboard for the convenience of the fire control officer.

*b. Plotting.* Plotting is done by two pens mounted on movable pen carriages. The pen carriages move up and down ($H$ axis). The arms on which the pen carriages are mounted move horizontally ($T$ axis). The right pen plots only on the right half, the left pen on the left half of the plotting board. Therefore, no pen interchange is required as in the horizontal plotting board. There are mechanical stops to prevent the pens from touching. Prior to launch the right pen plots the altitude of the predicted point-of-intercept against the predicted time-of-flight. After launch, the right pen plots the altitude of the target against the predicted time-to-intercept and the left pen plots the altitude of the missile against the predicted time-to-intercept.

*c. Timing Marks and Fire Order* (fig. 119). In addition to altitude, the pens plot timing marks every 10 seconds, and in addition, the right pen indicates the time the fire order was given. After the missile is launched, the target trace starts where the predicted intercept point trace stopped except when the altitude of the target is changing. It is not superimposed on the predicted intercept point trace. When the missile intercepts the target, the target trace and missile trace should be at the same altitude and at zero time-to-intercept.

## 124. Plotting Board Controls

*a. Controls.* The plotting board controls consist of a five-position rotary switch (plotting control switch), two pushbuttons, and two light intensity controls. All are located on the tactical control panel on the battery control console assembly (fig. 7). The five-position switch positions are:

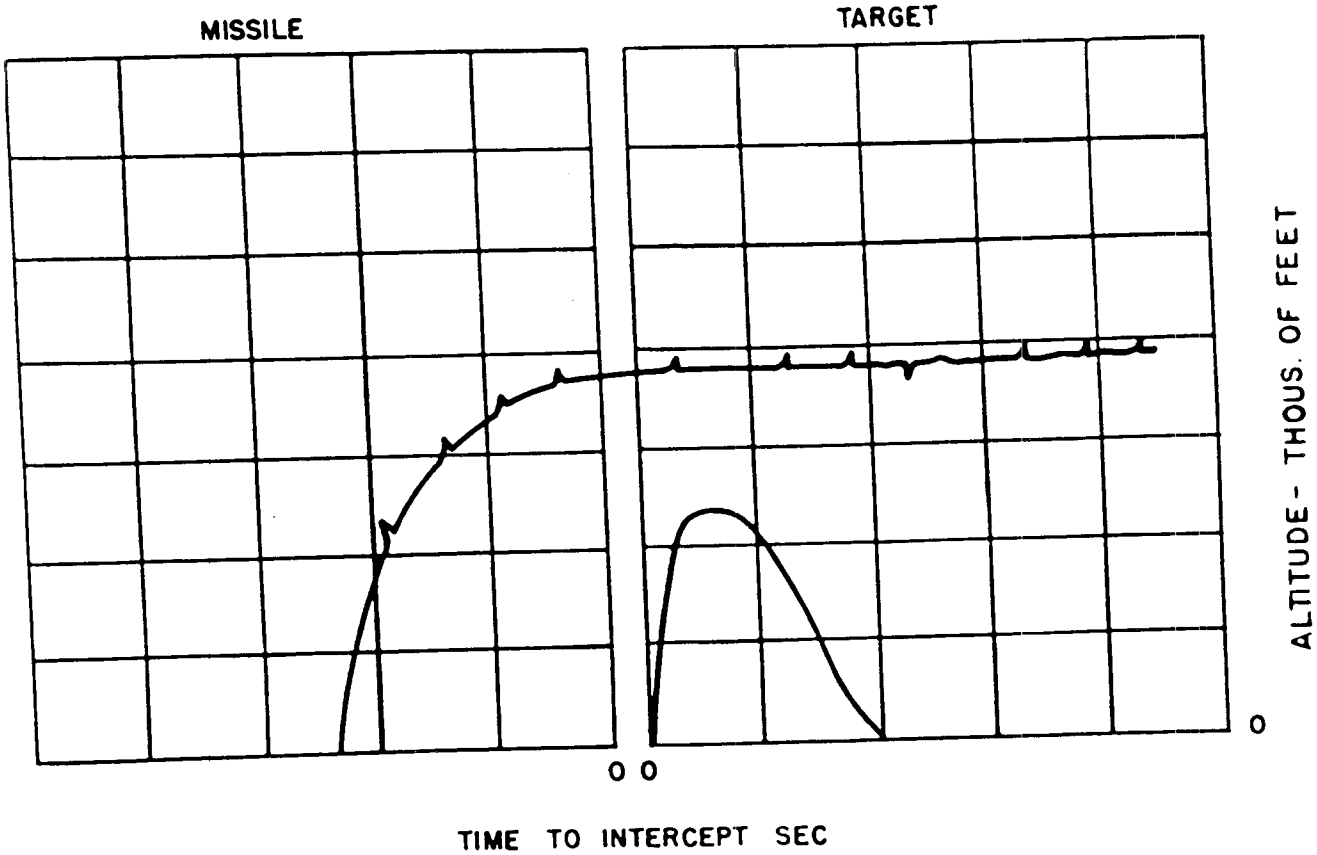


*Figure 119. Altitude plotting board plots.*

REFERENCE MARK, STANDBY, OPERATE, PLOT, and TEST. The two pushbuttons are: PEN LIFT and PEN INTERCHANGE. The two light intensity controls adjust the intensity of the lights behind the plotting boards.

*b. Reference Mark.* When the control switch is operated to the REF MARK (reference mark) position, the right pen of the horizontal plotting board and both pens of the altitude plotting board drop to the paper and plot a horizontal line from the sides of the plotting paper to the origin of the coordinates of each board. When the control switch is operated to the STANDBY position, the pens make a short vertical line upward (approximately 2,000 yards), lift from the paper, and return to the standby position. Note that to make a complete reference mark the control switch must be operated from STANDBY to REF MARK and then back to STANDBY. The intersection of the horizontal and vertical line on the horizontal plotting board represents the coordinates of the target-tracking radar and on the altitude plotting board zero time-to-intercept and zero yards altitude. This makes it possible to orient the plots or traces with a standard military map for an after-firing analysis or critique.

*c. Standby.* With the computer fully energized, when the control switch is operated to the STANDBY position, positioning voltages are applied to all plotting boards, and the right and left pens are driven to the right and left side of the plotting boards respectively. The pens are not touching the plotting paper.

*d. Operate.* When the plotting control switch is operated to OPERATE, all pens are positioned to indicate the coordinates of the input data but remain lifted from the paper. Thus, while the pens move, they do not plot. This makes it possible to start plotting immediately at any time desired without showing traces from the standby positions of the pens (at the edge of the board). Also, when the right pen on the altitude plotting board starts to travel to the left, it is an indication to the battery control officer that the target is within engagement range. As long as the control switch remains in the OPERATE position, the pens will continuously indicate the coordinates of data received from the computer, but will not plot.

*e. Plot.* When the plotting control switch is turned to PLOT, the pens will drop to the paper and plot in response to their input data.

*f. Pen Lift.* Depressing the pen-lift pushbutton causes all pens to simultaneously lift from the paper. This may be used to indicate a critical point in the engagement or to cause the pens to stop plotting momentarily.

*g. Test.* Before the pens will drop to the paper with the control switch in the PLOT position, certain relays must be closed. The closing of these relays requires computer input data and that the computer be settled. However, when the control switch is operated to the TEST position, these relays are cut out of the circuit, and the pens will drop to the paper. This makes it possible to test the dropping of the pens at any time without data from the computer and also to plot data when the computer is not otherwise conditioned to plot (under test conditions of the computer).

*h. Pen Interchange.* During an engagement, pen interchange is accomplished automatically whenever the pens or pen arms touch each other. To effect the pen interchange manually, the computer must be in the prelaunch and initial turn static test condition and the pen interchange pushbutton depressed. When the pen interchange pushbutton is depressed, the input data to the two horizontal plotting board pens is interchanged. That is, the pen plotting the target position will start to plot the missile position and the pen plotting the missile position will start to plot the target position. Indicator lights indicate which pen is plotting missile present position and which pen is plotting target present position.

## 125. Plotting Paper

The plotting paper is issued in rolls. The roll of paper is inserted on the left side of the plotting board and pulled across the plotting surface from left to right. When a clean plotting surface is required, the operator pulls the paper out of the plotting board on the right side and tears off the used portion. Each plot should be properly marked for identification and future analyses or critiques.

# Section III. EVENT RECORDER

## 126. General

*a. Location* (figs. 22 and 23). The event recorder is located in the upper one-half of the battery control switchboard and cabinet assembly in the battery control trailer. It is monitored by the switchboard operator. Adjustment and maintenance will be performed by qualified personnel only. Two modes of operation are available, the test mode and the signal-recording mode. The recorder is automatically put into operation (signal-recording mode) when the system goes into the red alert status.

*b. Major Assemblies.* The event recorder is an electromagnetic oscillographic device which produces a permanent record on light sensitive paper or film by photographing light traces. Time and grid lines are included to make interpretation easier. The event recorder is made up of three major assemblies, a camera assembly, a galvanometer bank assembly, and an optical assembly. A separate photographic processing machine is provided for developing the film or light-sensitive paper.

## 126.1 Modified Recorder Galvanometer Bank Assembly

Experience has indicated a need to record more data than given in paragraph 126 and table XLVII. The event recorder was therefore modified on Nike I sets serial number 246 and above to record the data given in table XLVII.I. Field Changes 1395 will modify sets below serial number 246. The operator's controls and duties are the same for both recorders, except for the zero-set pushbutton. When the zero-set pushbutton is depressed on the modified recorder, the traces will go to their respective zero-trace positions, then to their respective maximum positions for approximately 2 seconds, and then start recording. This results in a several second loss of recording input data. Therefore, the zero-set pushbutton should not be depressed during the red status when the modified event recorder is being used.

## 127. Camera Assembly

The camera assembly contains a camera housing, supply and takeup cassettes, a drive system,

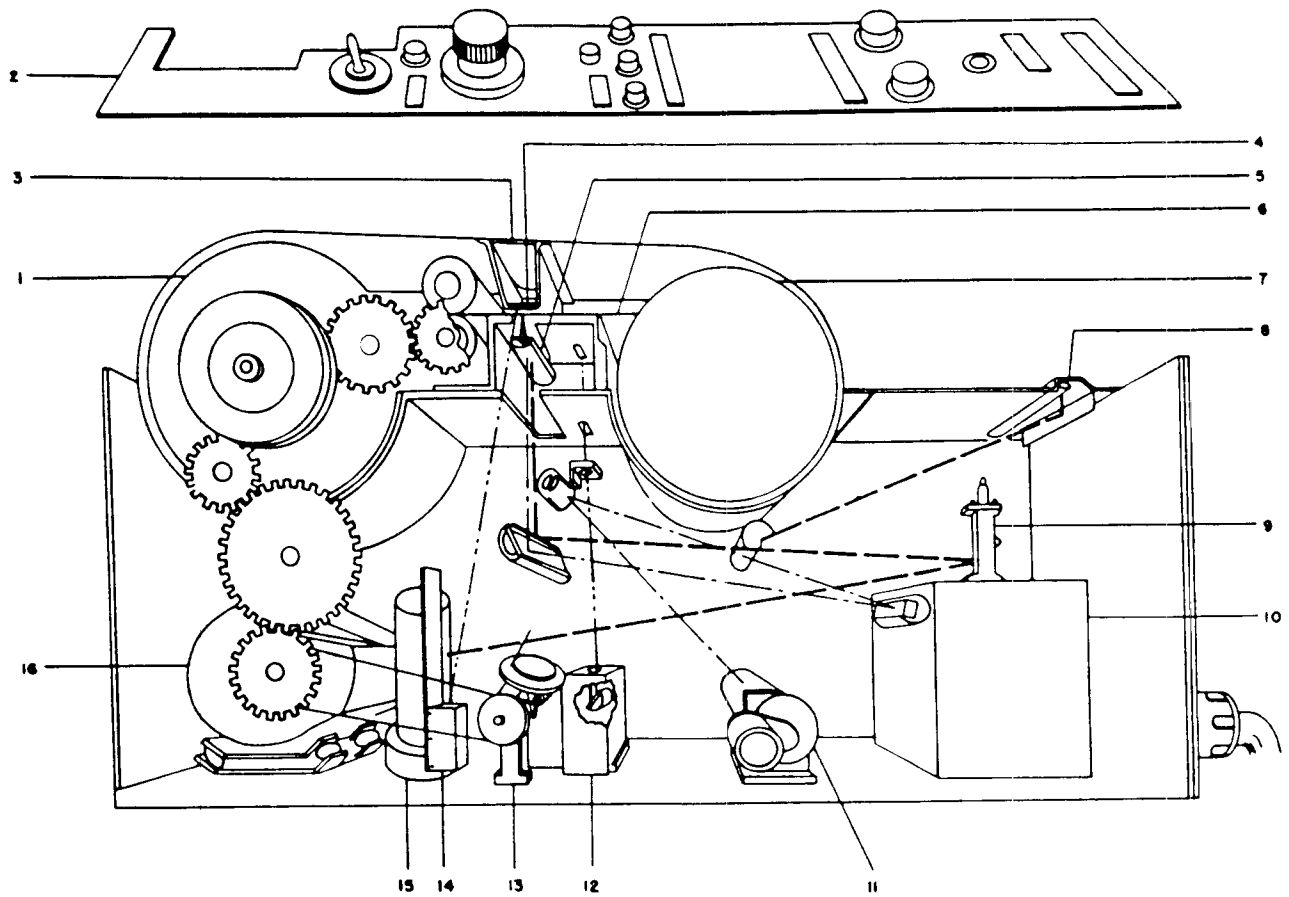


LEGEND:

1. TAKE UP CASSETTE
2. CONTROL PANEL
3. SHUTTER
4. CALIBRATED ADJUSTMENT SCALE
5. CYLINDRICAL RECORDING LENS
6. RECORDING MEDIUM
7. SUPPLY CASSETTE
8. DIRECT TRACE MONITOR
9. GALVANOMETER
10. GALVANOMETER BANK ASSEMBLY
11. TIMING UNIT
12. RECORD NUMBERING UNIT
13. TRACE IDENTIFIER
14. GRID LAMP HOUSE
15. GALVANOMETER LAMP HOUSE
16. CHART DRIVE MOTOR

*Figure 120. Pictorial diagram of event recorder.*

a footage counter, and a calibrated adjusting scale. A single-speed drive carries the light-sensitive paper from the supply cassette over the aperture and into the takeup cassette. The photographic paper is 12 inches wide and comes in 200-foot rolls. A knife, provided as an integral part of the recorder, is used to cut off the exposed portion of the paper from the unexposed portion. Thus the exposed portion of the paper (in the takeup cassette) can be removed for developing without running the unexposed portion of the 200-foot roll through the event recorder. The camera assembly can be opened by depressing the two camera assembly release buttons located on the top of the supply cassette access door. The takeup cassette is readily accessible by turning the two takeup door release knobs in the direction shown on each knob and pulling the door away from the magazine. The supply cassette is accessible by depressing the supply cassette door release buttons located underneath the supply cassette access door and lifting the supply cassette access door. A dial (footage counter) indicates the amount of film or light-sensitive recording paper remaining in the roll. The dial must be manually set to indicate the correct amount when a new roll is inserted in the supply cassette. An end of paper (E OF P) red light indicates to the switchboard operator that less than 25 feet of recording paper remain in the supply cassette.

## 128. Galvanometer Bank Assembly

The recording galvanometers are the heart of the event recorder. They provide an accurate

formly spaced in width. These lines are of value in determining the amount of change or deflection from the zero-trace. The lines are one-tenth of an inch apart longitudinally along the length of the paper. They coincide with the lines on the calibrated adjusting screen. To make interpretation easier, every fifth line is heavier than the others. The slots in the aperture which produce the grid lines are longer at the extreme distances from the light source to make the lines of uniform width and density.

*e. Record Number System.* This system provides a method of numbering each complete record by photographing a number on the light-sensitive paper at the start of each recording sequence. Two separate lights illuminate a counter in the counter box. The light beam then goes through a series of mirrors and lenses and the number is reproduced on the light-sensitive paper. Care must be taken to insure that the number reproduced on the light-sensitive paper is the same as the number appearing on the record-number indicator on the right side of the event recorder assembly. If these two numbers are not the same, a maintenance adjustment must be made to make them read the same.

## 130. Trace Identification

Another feature incorporated into the optical system is trace identification. Each of the galvanometer traces is periodically broken or interrupted for a very short time in a fixed time sequence. This sequence of interruption is accomplished by momentarily interrupting the galvanometer traces at the desired times. Since no two galvanometer traces are broken at identically the same instant, the trace identification aids the chart analyst in following each trace if in some cases they overlap.

## 131. Controls and Indicators
(fig. 121)

*a. Location.* The controls and indicators for the event recorder are located in the front panel of the recorder.

*b. Record Number.* The counter shows the number of the next record to be photographed.

*c. Galvanometer Zero.* This pushbutton, when depressed, causes each galvanometer to indicate its zero-trace position. This appears on the record as a horizontal line. The length of the zero-trace line will correspond with the time this pushbutton is depressed. While the event recorder, at the start of each engagement, automatically indicates the zero-traces, many times it is desirable to indicate the zero-trace at other times. For example, if the zero-trace is recorded immediately after burst, the interpretation of the data in channels 16, 17, and 18 is considerably easier. These extra nonautomatic indications will also reveal any shift or change in the zero-trace position during an actual recording sequence.

*d. Power, 400-Cycle and DC.* There are two power lights on the recorder panel. The −28 volt, dc lamp, when illuminated, indicates that this power is available and the recorder is energized. The 120-volt, 400-cycle lamp, when illuminated, indicates that the main power switch on the acquisition radar power control panel is in the ON position, and that this power is available at the event recorder.

*e. Lamp Failure, T, 1, and 2.* There are three lamp-failure lights, labeled T, 1, and 2. When the T lamp is brightly illuminated, it indicates that the timer-unit lamp has failed. When the lamp-failure 1 lamp is brightly illuminated, it indicates that galvanometer lamp number 1 has failed. Galvanometer lamp number 1 provides illumination for the first ten galvanometers only. Since these galvanometers are not currently used in the Nike I system, the lamp failure 1 circuit is nonoperative. Galvanometer lamp number 2 provides light for the galvanometers currently used in the Nike I system. Lamp-failure 2 light, when illuminated, indicates failure of galvanometer lamp number 2.

*f. View.* The VIEW lamp, when illuminated, indicates that the VIEW-RECORD switch has been turned to VIEW and the TEST-OPERATE switch to TEST. This indicates to the operator that the event recorder is in the test mode of operation and not in the signal-recording mode.

*g. View-Record.* This two-position rotary switch, when turned to the RECORD position, conditions the aperture of the camera to record signals. When turned to the VIEW position, it opens the camera aperture to increase the intensity of the traces. To view the traces on the calibrated adjusting screen, the covering over the viewing port must be opened.

*h. Motor On.* When this light is illuminated, it indicates that the chart drive-motor is energized.

*i. Test-Operate.* This two-position toggle switch is used to facilitate making galvanometer adjustments. In the TEST position and when the VIEW-RECORD switch is in the VIEW position, −28 volts dc is applied to the event recorder and the view lamp illuminates although the Nike I system is not in a red alert status. With the TEST-OPERATE switch in OPERATE and the VIEW-RECORD switch in RECORD, the −28 volts dc power is not applied and therefore the event recorder will not record until after the system is in a red alert status.

*j. Shutter Control.* This knob controls the opening and closing of the shutter which makes possible the viewing of the calibrated adjusting scale. It is interlocked with the VIEW-RECORD switch so that the shutter can be opened only when the VIEW-RECORD switch is in the VIEW position.

*k. Footage Counter.* This calibrated dial indicates the number of feet of recording paper remaining in the supply cassette. To read accurately, it must be reset to show the correct footage of

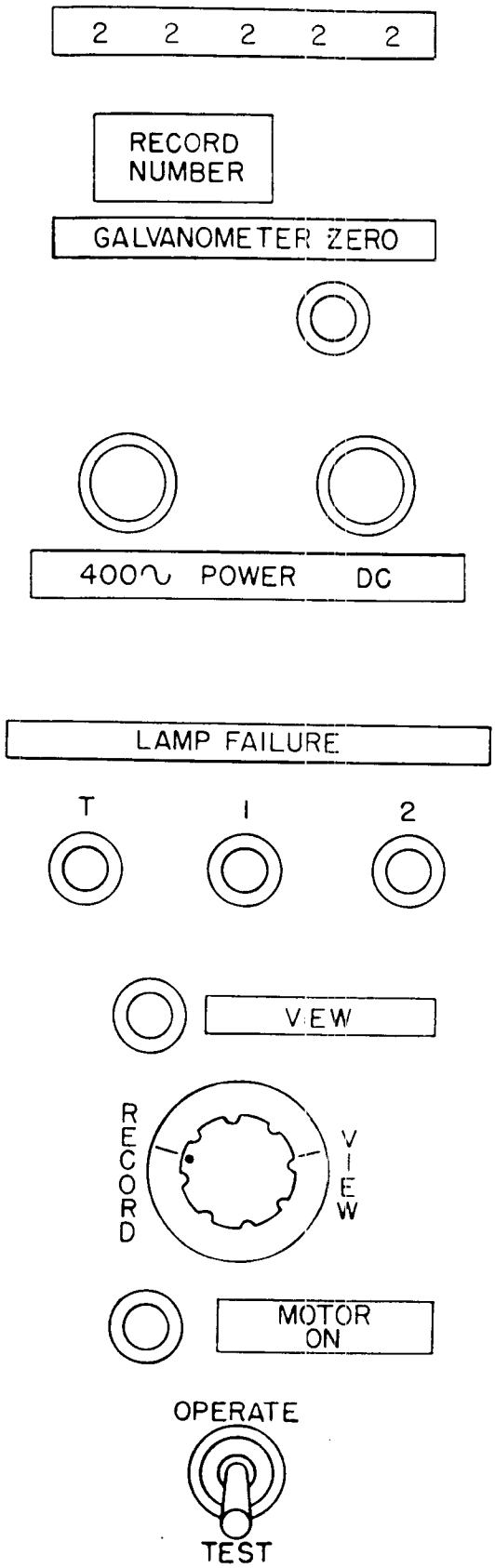


*Figure 121. Event recorder controls and indicators.*

recording paper in the supply cassette each time the event recorder is reloaded.

*l. End of Paper (E of P).* This indicator lamp, located on the battery control switchboard, comes on when the footage counter indicates there is less than 25 feet of recording paper in the supply cassette. It is an indication to the switchboard operator to reload the event recorder paper.

## 132. Operation

Two modes of operation are provided: the signal-recording mode and the test mode. The signal-recording mode is the normal mode of operation during an engagement and at all times other than when tests are being made. The test mode is used to calibrate and adjust the galvanometer traces. The battery control trailer switchboard operator is responsible for operating the event recorder.

*a. Signal-Recording Mode.* To operate in the signal-recording mode, the switchboard operator:

Turns the TEST-OPERATE switch to OPERATE.

Closes the shutter by turning the shutter control knob.

Turns the VIEW-RECORD switch to RECORD.

The VIEW lamp should go out.

Checks the footage counter to insure there is enough recording paper in the recorder. the red E of P lamp should not be lighted.

When the MAIN POWER switch on the acquisition radar power control panel is operated to ON, makes sure the 400-cycle power lamp is lighted.

When the alert status switch is turned to the red alert status, the recorder is automatically energized. The MOTOR-ON indicator light lights and the lamp-failure T and 2 lamps should burn at a very low brilliance. When the engagement is completed and the alert status switch is operated to white, yellow, or blue alert, the event recorder will automatically stop recording.

*b. Alternate Method of Signal Recording.* The recorder may be operated in the signal-recording mode by turning the TEST-OPERATE switch to the TEST position, the shutter to CLOSED, and the VIEW-RECORD switch to RECORD. In this method of operation, the recorder is operational as soon as power is applied.

*c. Test Mode.* The test mode of operation is provided to expedite the checking and adjustment of the galvanometer zero-trace positions and trace deflections. To operate in the test mode, set the controls as follows:

TEST-OPERATE to TEST.

VIEW-RECORD to VIEW.

Shutter OPEN.

All indicator lamps except E of P should illuminate. The lamp-failure T and 2 lamps should burn at a greater brilliance than when operating in the signal-recording mode.

The galvanometer zero-traces can now be viewed on the calibrated adjusting screen by looking through the shutter opening. The adjustment of the galvanometers will be accomplished only by qualified maintenance personnel.

## 133. Camera Loading and Unloading Procedures

(fig. 122)

*a.* Open the take-up cassette access door by pressing down on the two takeup door release knobs and pulling the door away from the magazine.

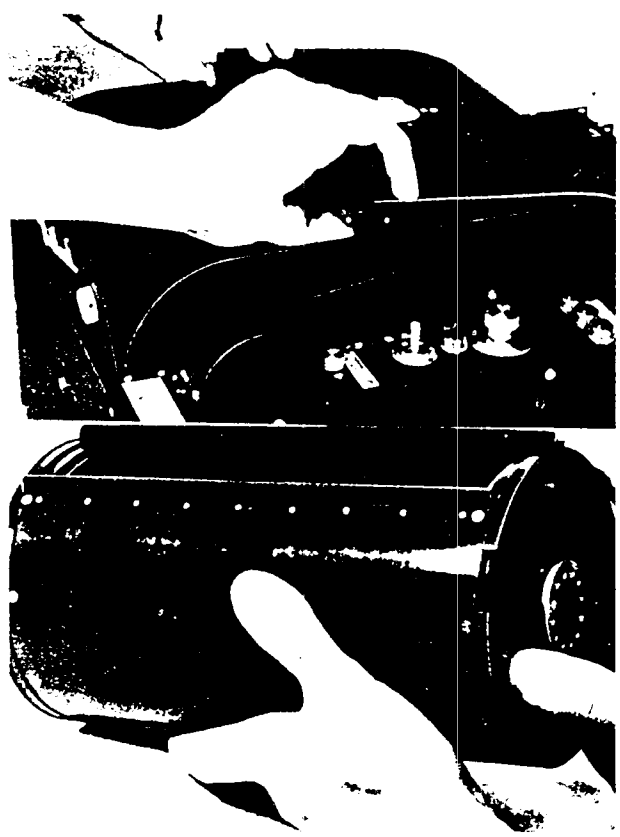

*Figure 122. Camera loading.*

*b.* Open the supply door cassette access door by placing the thumbs on the supply cassette door release buttons and lifting the latches. As soon as the latches release, the door can be lifted up and opened.

*c.* Lift out and load the supply cassette as follows:

(1) Open the supply cassette by depressing the latch on the right side of the cassette to the center with the thumb and pulling the felt lips apart with the other hand.

(2) Pull open the drum until it will open no further.

(3) Reach inside the drum and withdraw the spindle.

(4) While working under a safe light in a darkroom, or in subdued light, insert the spindle through the core of the fresh roll of film or light-sensitive paper and replace the spindle (with paper) in the drum. The roll must be placed in the drum so that the paper unrolls from the top of the magazine when positioned in the camera. The inner shell of the drum must close down on the side opposite the emulsion on the paper or film. This places the emulsion in the proper position when the cassette is placed in the event recorder.

***Caution:*** Insure that the paper is properly inserted.

(5) Pull the recording paper over the recording aperture so as to provide a leader approximately 6 feet long protruding from the supply cassette.

(6) Close the cassette by rotating the inner shell until the felt lips are closed. The leader should be between the lips. Be sure that the latch has been locked before leaving the darkroom or exposing the paper to any light other than the safe (subdued) light.

*d.* Insert the supply cassette in the camera assembly. The pins in either side of the upper cassette should first engage plates in the upper part of the camera The finger openings in both sides of the supply and takeup cassette for the spindle should face outward. Pull the leader out and across the recording aperture. If the supply cassette is properly loaded, the emulsion side will face the aperture plate.

*e.* Open the takeup cassette in the same manner as the supply cassette. (It is not necessary to remove it from the event recorder.)

*f.* Remove the paper clip from the takeup spool.

*g.* Pull the paper or film into the takeup cassette until it overlaps the takeup spool.

*h.* Press the paper clip over the paper and spool. This retains the paper on the spool for proper takeup.

*i.* Close the takeup cassette. Check that the latch has been closed properly.

*j.* Close the supply-cassette access door by pushing outward and to the right on the retaining arm and pulling the door down to the closed position. Press the door firmly in place to allow the latches to lock.

*k.* Close the takeup cassette access door with a firm pressure to allow the latches to lock.

*l.* Set the footage counter to indicate the correct footage in the supply cassette (200 feet in a complete roll).

*m.* The event recorder is now loaded and may be operated. Operate for 2 minutes to use up any fogged paper.

*n.* After a record has been made, continue to run for 3 minutes to insure that all of the record is in the takeup cassette, open the takeup cassette access door, and cut the paper by pushing the paper knife across the record.

*o.* Lift out the takeup cassette and proceed to develop the exposed film.

*p.* Strong light will cause the sensitized material to go bad in the cassettes. It is recommended that the drums be stored in light-tight containers, if loaded.

## 134. Interpretation of Galvanometer Traces

*a. Classification.* A complete and correct interpretation of the information contained on the event recorder record is classified information. Therefore, purely fictitious examples are used to illustrate the general techniques involved.

*b. On-Off Type Signals* (fig. 123). As shown in table XLVIII, channel 21 records the time of occurrence of six events—target designated, target tracked, ready to fire, fire, launch, and burst. The zero-trace (column 3) appears at 10.5 inches from the edge of the paper. Therefore, prior to the time the target is designated, the galvanometer trace will appear at the 10.5-inch position on the recording paper. The 0.1-inch spaced grid lines make the location easier. Column 4 of table XLVIII shows the maximum trace deflection to be 0.6 inch (10.5 to 11.1). Assume each of the six signals cause the galvanometer trace to deflect

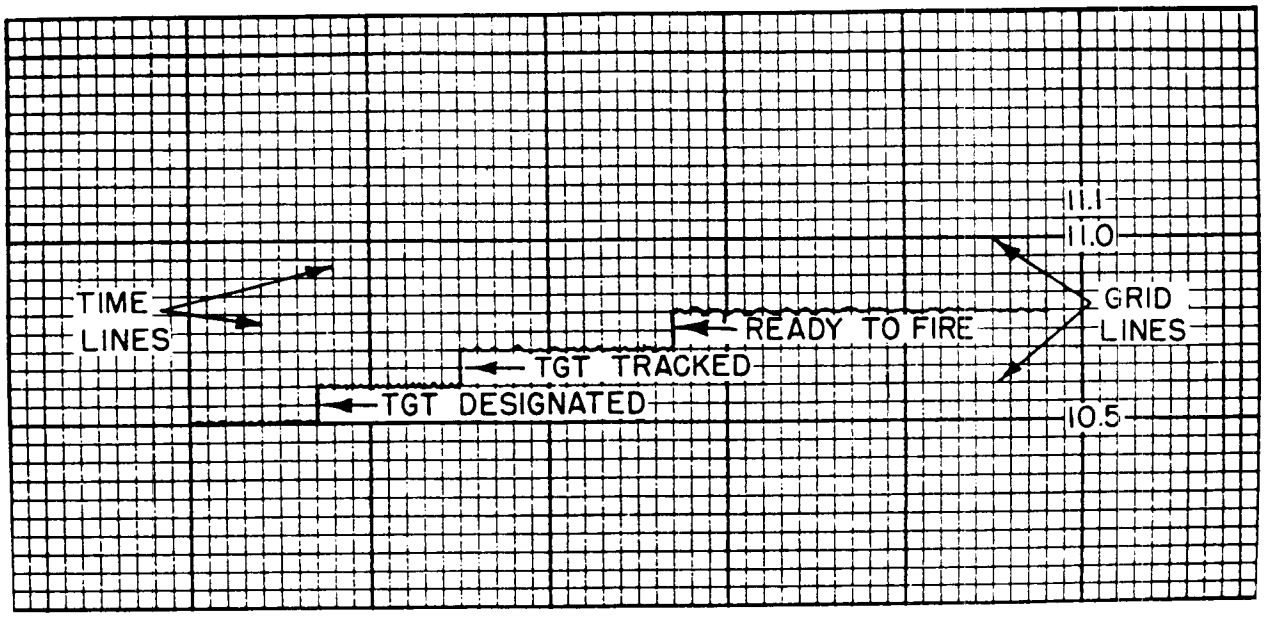


*Figure 123. Hypothetical on-off galvanometer trace.*

0.1 inch. When the trace appears at 10.6 inches (10.5+0.1) it indicates the target has been designated to the target-tracking radar. As soon as the target-tracking radar operator locks on the designated target and depresses the target-tracked pushbutton, the galvanometer trace will appear at the 10.7-inch position on the paper. By counting the 1-second time lines (vertical), the time elapsed between target designated and target tracked can be ascertained. In a similar manner, the time of the occurrence of any of the recorded events can be ascertained relative to any other happening recorded.

*c. Quantitative Signals* (fig. 124). Channels 15 through 20 record data quantitatively. They show not only when an order was given but also how large an order was given. For example, channel 19 records the orders given the missile in the pitch plane. The maximum trace deflection is two inches (9.5 minus 7.5) and the zero trace is at 8.5 inches. Assume the maximum command given will not exceed ±lg in the pitch plane and the maximum trace deflection equals the maximum command (±lg). When there is no command in the pitch plane, the galvanometer trace will be at 8.5 inches. If a plus lg command in the pitch plane is sent to the missile, the galvanometer trace will be displaced to the 9.5-inch position (maximum positive) on the light-sensitive paper. If a minus lg command is given, the trace would appear at 7.5 inches (maximum negative). If the trace appears at 9 inches, it would indicate a plus ½g command in the pitch plane was sent to the missile. In a similar manner, the command, if any, in the yaw plane at the same instant of time can be determined by using the same time line and channel 20. Knowing the command given in yaw and pitch planes at any particular time, the resultant vector will indicate whether the missile was ordered to climb, dive, turn, etc. The resultant vector and the time can then be correlated with the data on the plotting boards to ascertain whether the missile responded to the command. By knowing the position of the zero-trace, the maximum trace deflection, and the data limits, the information contained in the quantitative channels can be interpreted.

*d. Other Information.* A trained technician can estimate many causes for missile failure from the event recorder record. Additional channels to record technical information for the trained maintenance man may be added at a later date.

## Section IV. PHOTOGRAPHIC PROCESSING MACHINE

### 135. Description

The photographic processing machine is used to develop quickly and semiautomatically the record of events recorded by the event recorder on the light-sensitive paper. It is capable of processing 200 feet of 12-inch paper in 1 hour. The unit is encased in a compact cabinet mounted on rubber-tired casters for ease of mobility. A 20-foot power

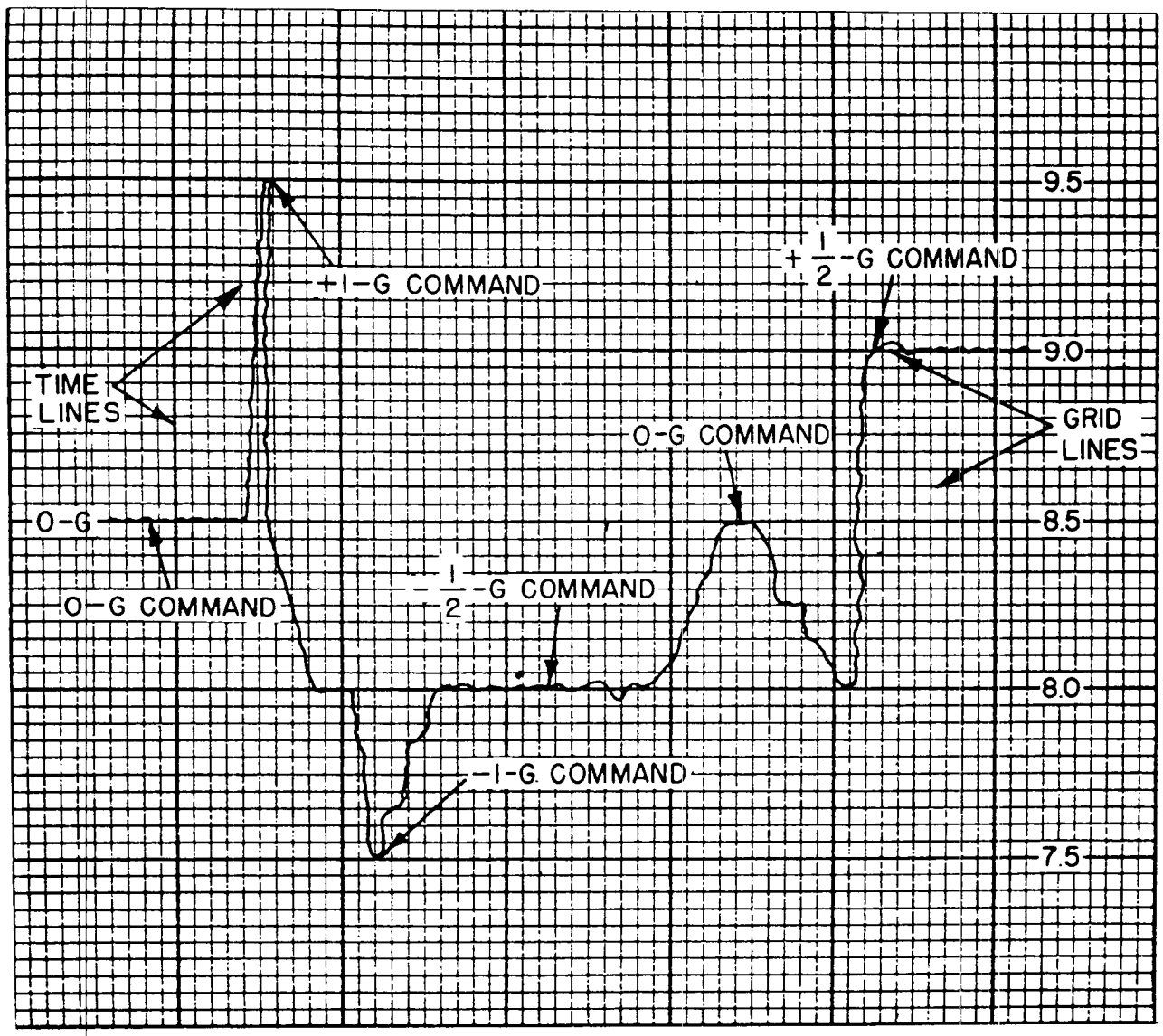


*Figure 124. Hypothetical quantitative galvanometer trace.*

cable is provided for connecting the processing machine to the required 120-volt, 60-cycle power source. Figure 125 is a simplified diagram of the photographic processing machine.

## 136. Theory of Operation

*a.* The exposed paper is received from the event recorder in the lightproof takeup cassette. A leader, equal in length to approximately 18 turns around the outside of the cassette, protrudes out of the cassette closing lips. This cassette is mounted on top of the machine. The exposed paper and the leader are then pulled through four tanks to develop the record. Tank No. 1 is the developer tank. It contains 1½ gallons of developer solution. To maintain this solution between the required 90° to 95° F., a thermostatically controlled heater is located at the base of tank No. 1. This heater is energized when switch S2 is ON. Tank No. 2 is a rinse tank. It contains 2 gallons of solution. Tank No. 3 is the hypo fix tank. It contains 2 gallons of hypo fix. Tank No. 4 is a rinse tank. It contains 2 gallons of fresh water. The developer and hypo fix solution are made by the using organization by mixing prepared powders with water. New solutions should be made after 600 feet of paper have been developed. Solutions should not remain in the tanks for more than 24 hours at any one time. Prepared developer must be stored in dark bottles.

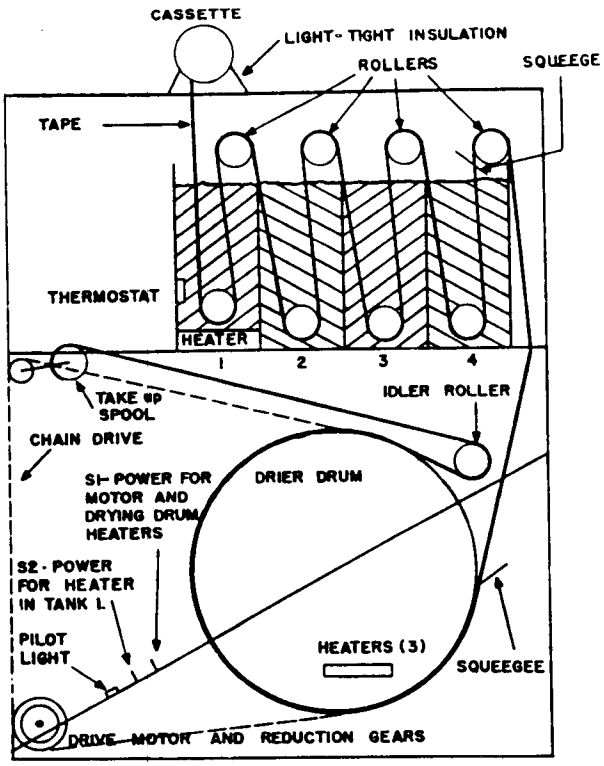


*Figure 125. Photographic processing machine, simplified diagram.*

Each tank has a removable roller assembly, consisting of a top and bottom roller, mounted in a frame.

*b.* The cassette containing the exposed paper is mounted above the developer tank. This cassette is made lightproof by closing the felt lips. To maintain a lightproof condition when the paper goes from the cassette to the developer (tank No. 1), the mounting on the developing machine to which the cassette is attached is made lightproof by a soft insulating material. To thread the machine, the 18-foot leader of exposed paper is threaded through the tanks, around the drying drum, and into the takeup spool.

*c.* The drying drum is a driven metal cylinder 20 inches in diameter. The drum is heated by three 600-watt, wirewound ceramic heating elements. The drum is chain driven by a motor, through a reduction gear box, at a speed of 3 to 5 feet of paper per minute. Two squeegees, one located at the exit side of tank No. 4 and one immediately prior to where the paper first comes into contact with the drying drum, remove any excess water. The squeegee near the drying drum does not touch the drum. The drive motor and the heater in the drying drum are energized when switch S2 is operated to ON. The developed paper is rolled on to the takeup spool. This spool has a center or core which can be readily removed from the roll of developed paper.

## 137. Responsible Personnel

One photographic processing machine may be issued for use in each of the firing batteries or in a battalion headquarters and headquarters battery. When the firing battery develops the paper, personnel in the firing battery headquarters are responsible for the operation and maintenance of the machine. If headquarters and headquarters battery develops the paper, the operations and intelligence section is responsible for the care and operation of the machine. Priority for development is determined by the battalion S3.

## 138. Preparing To Develop

*a.* Open the two doors in the lower part of the front section. Fold the upper front panel and the top panel together and swing them to the back of the machine. This makes the developing tanks accessible.

*b.* Release the two drawbolts at the top of each end panel. This permits each panel to be lowered to the horizontal position. These panels may be used as shelves during the developing process. Fasten the spring clips on the front doors to the panels to hold the doors in position.

*c.* Make sure that the tank heater and drive power switches are OFF.

*d.* Connect the power cable to the 120-volt, 60-cycle power source.

*e.* Open the light-excluding cover of the developing tank. Swing the cover to the back stop so that it will remain open.

*f.* Remove the roller assemblies from the four tanks.

*g.* Insure that the drain hoses are clipped in a vertical (nondrain) position (nozzles pointing upward).

*h.* Pour clean, fresh, warm water (90° to 95° F.) into No. 1 tank until the level reaches approximately 1 inch below the marked position. The water temperature may be raised by auxiliary immersion heaters or by any other convenient means if warm water is not available.

*i.* Turn the tank heater switch S1 in the lower compartment ON. The pilot lamp should illuminate, indicating the No. 1 tank heater is energized. The tank heater should not be energized when the tank is empty.

*j.* Pour clean, fresh, warm water (90° to 95° F.) into tank No. 3 until the level reaches approximately 1 inch below the marked position. The water temperature may be raised by auxiliary immersion heaters or by any other convenient means if warm water is not available.

*k.* Pour clean, fresh water into tanks Nos. 2 and 4 until the level reaches the marked position.

*l.* Check the temperature of the water in tank No. 1 with the thermometer furnished. The temperature should be 90° to 95° F. before proceeding. It may be necessary to adjust the thermostat initially.

*m.* Open the can containing the developer powder and add the contents to the water in tank No. 1. Stir with the rod furnished. *Disregard the temperatures mentioned on the container.*

*n.* Open a can of hypo fix. Add the contents to tank No. 3. Stir with the rod furnished. Prior to using, the rod should be rinsed in either tank No. 2 or 4. *Disregard the temperatures mentioned on the container.* The smaller of the two packages in the container should be added first.

*o.* Pour clean, fresh, warm water (90° to 95° F.) into tanks Nos. 1 and 3 until the water reaches the marked position.

*p.* Close the light-excluding door.

***Caution:*** Do not contaminate the developing solution with the hypo fix solution. The immersion heater, thermometer, and stirring rod should be rinsed in clean water before being placed in the developing solution. A separate can should be used for emptying the tanks so that in refilling the tanks with clean water, it will not be contaminated by any used solution remaining in the emptying can.

## 139. Inserting the Film

*a.* Insert the cassette with the exposed paper into the cradle.

*b.* Thread the exposed paper leader through the slit in the cradle. *The pink emulsion side of the paper must be toward the tanks.* Make sure that the index pins in the cassette engage their associated pins in the mounting.

*c.* Lock the cassette in place in the cradle with the chain and spring fastener.

*d.* Open the light-excluding cover of the developing tank. Swing the cover to the backstop so that it will remain in the open position.

*e.* Wind the leader into a compact roll.

*f.* While standing in front of the machine, pick up the tightly rolled leader in the right hand.

***Caution:*** Be careful not to pull any of the exposed paper from the cassette during the threading of the paper.

*g.* Grasp the top of the roller assembly in tank No. 1 with the left hand. Lift the roller assembly out of the tank.

*h.* Unroll part of the leader across the top of tank No. 1.

*i.* Place the bottom roller of the roller assembly from tank No. 1 over the leader.

*j.* Push the roller assembly about halfway down into the tank, unrolling the leader as required. *Do not pull any of the exposed paper out of the cassette.*

*k.* Thread the leader through the roller frame and over the top of the upper roller of the roller assembly.

*l.* Lower the roller assembly to its final position (down) in tank No. 1.

*m.* Unroll the leader until it extends over the top of tank No. 2.

*n.* Lift the roller assembly from tank No. 2. Place the lower roller over the leader. Push the lower roller half way down into tank No. 2. Thread the leader over the top roller and push the roller assembly to its final position as was done with tank No. 1 and its roller assembly.

*o.* In a similar manner, thread the leader through tanks 3 and 4.

*Note.* The top roller in the roller assembly in tank No. 4 has a squeegee. Move the squeegee to an off-normal position until after the leader has been threaded through tank No. 4. Then move the squeegee to its normal position.

*p.* Move the other squeegee away from the drying drum so that the leader can be inserted between the drum and the squeegee.

*q.* Thread the leader around the drying drum.

*r.* Move the squeegee to its normal position.

*s.* Thread the leader around the idler roller.

*t.* Thread the leader into the takeup spool.

## 140. Developing

To start the developing process, close the doors on the upper part of the machine, and turn the motor-on switch (S2) to ON. After all of the paper has been developed, turn switches S1 and S2 to OFF. Open the machine and remove the takeup spool from its spindle. Pull the center from the spool. Reinsert the spool into the machine. When the latter part of the roll is being developed, the paper may become loose as it leaves tank No. 4. This can result in the paper going over the idler roller before the drying drum and possibly tearing the paper. To prevent this, use a smooth rod or stick to guide the paper onto the drying drum.

# PART TWO
# OPERATIONAL CHECKS
# CHAPTER 8
# BATTERY CONTROL AREA

## Section I. REQUIREMENTS

### 141. General

The range and altitude capabilities of the Nike I system make it mandatory that all tests, checks, and adjustments be made carefully and accurately. The tests and checks are divided into daily, weekly, and monthly checks. The daily checks are the same as the prefiring checks. These are listed on the operational log sheets issued with the equipment. The procedure is given in paragraphs 144 through 177. If the early warning time is not sufficient, the emergency prefiring checks (pars. 180–189) will be completed. After the emergency checks are completed, the daily checks should also be completed if time allows. The battery control officer will direct which checks will be completed in the section drill (par. 327*a*(3)). The TM 9–5000-series, and TM 9–5001-series give the procedures for completing the weekly and monthly checks.

### 142. Readings and Tolerances

The operational check sheets supplied with the equipment, the TM 9–5000-series, and TM 9–5001-series give the readings and tolerances for each check. Improvements made in the system, either when manufactured or through field changes, may change some of the readings and tolerances. It is therefore impossible to present one set of check sheets that would be applicable to all systems. The personnel making the checks should, in case of doubt, verify with the maintenance personnel that the operational check sheets being used apply to the system being checked. For these reasons, the check sheets are not reproduced in this field manual. The daily checks to be performed and the procedure for completing them are given. The check sheets supplied with the equipment should be used in conjunction with these procedures and filled in as each step is completed. For procedures not covered in this manual, see the TM 9–5000-series.

### 143. Training

It is imperative that qualified operators be trained to perform as many of the checks and required adjustments as possible. Extreme care must be used to determine whether any operator is qualified. Initially, all checks and adjustments must be made under the direct supervision of or by qualified maintenance personnel. Therefore, some of the checks and adjustments listed herein may be beyond the capabilities of operator personnel, depending upon the state of training of the operator. Each battery should maintain, consistent with its tactical requirements, an aggressive training program to train operator personnel to properly complete as many of the checks and required adjustments as possible.

### 144. Crew

*a.* The minimum manning crew will be responsible for performing the prefiring checks. The BCO and a maintenance man will also be present to perform their normal duties. The minimum manning crew consists of—

(1) Platoon sergeant, who acts as chief of section.
(2) Early warning plotter.
(3) Switchboard operator.
(4) Acquisition radar operator.
(5) Computer operator.
(6) TTR azimuth operator.
(7) TTR elevation operator.
(8) TTR range operator.
(9) MTR operator.
(10) Generator operator.

*b.* The BCO and the maintenance man are not assigned specific duties herein. The BCO should

check as necessary to insure that the prefiring checks are completed as required. The maintenance man should assist as required and complete those checks and required adjustments beyond the capability of the operator personnel.

*c.* The test responder acquire and command test (step 8, daily system checks) requires telephone communication with the launching control trailer and a panel operator to read the values at the LCT panel. The LCT normally will be manned when the checks are being performed. Therefore, the LCT personnel are not included in the battery control area crew.

## 145. Crew Verification

The CS will verify his crew by having them fall in and call off. The CS then commands POSTS, and the crew take their stations and perform the following duties.

*a.* Generator operator starts the generators or frequency converters and brings them up to proper operating temperature, frequency, and voltage.

*b.* The switchboard operator goes to the BCT switchboard and conference-connects the following:

(1) TTR antenna assembly.
(2) MTR antenna assembly.
(3) MTR console.
(4) TTR console.
(5) Computer operator's station in BCT.
(6) LCT panel operator's station.

*c.* Two of the TTR operators go to the TTR antenna assembly and complete the level check. After the level check is completed and the mount leveled, if necessary, one TTR operator returns to the radar control trailer and the other remains at the antenna. The one remaining at the antenna puts on the telephone headset.

*d.* The third TTR operator and the MTR operator go to the radar control trailer and energize the RCT through plate volts (low voltage).

*e.* The MTR and TTR operators leave the RCT, then check the level of the MTR antenna assembly. When the MTR antenna assembly is leveled, the MTR operator returns to the RCT. The TTR operator remains at the MTR antenna assembly and puts on the telephone headset.

*f.* The computer and acquisition radar operators go to the battery control trailer and energize the computer and acquisition radar through plate volts (low voltage).

*g.* The computer operator, acquisition radar operator, with the maintenance man assisting as required, complete the daily checks as prescribed in the daily check sheets.

*h.* The crewmen at the MTR and TTR antenna assemblies complete the antenna optical checks.

*i.* The MTR and TTR operators in the RCT assist the maintenance man in completing the daily checks prescribed in the daily check sheets.

*j.* The MTR and TTR operators at the antenna assemblies complete the tracking radar data unit check, and then position the antenna for the orient check.

*k.* Computer operator completes orient check.

*l.* MTR operator in the RCT then completes the test responder acquire and command test.

# Section II. DAILY SYSTEM CHECKS

## 146. Step 1, Step 2, and Step 3

*a. Step 1, General.* Step 1 is self-explanatory. The person performing the daily system checks will fill in this step.

*b. Step 2, Power generator checks.* The power generator checks require that the checker determine that there is sufficient water, oil, and fuel for proper generator operation. The checker's initials will be entered as each check is made.

*c. Step 3, Energizing the system.* The checker will energize the target-tracking radar, the missile-tracking radar, the acquisition radar, and the computer through PLATE VOLTS, observing that no malfunctions occur in switching or power application. The procedure required to energize the acquisition radar, target-tracking radar, missile-tracking radar, and computer for each check is covered in the preliminary setup for that check. The detailed procedure for energizing the system is covered in TM 9-5000-6.

## 147. Step 4, Leveling Checks

This check should be made on both antennas simultaneously with one man making all readings at each mount for any single leveling procedure.

*a.* Energize both the missile- and the target-tracking radars to include PLATE VOLTS.

*b.* Using the target antenna control unit, rotate the turntable until level A (the level whose long axis is located almost parallel to a radial line from



409893 O - 57 - 6

the center of the antenna mount) is parallel to the long axis and toward the drawbar of the trailer. Level B will be perpendicular to level A.

*c.* Press the button on the level box to illuminate the vial bubble. Rotate the knob on level A and level B until the ends of the bubble in each box line up. Always approach the final setting from the same direction of knob rotation.

*d.* Read and record the counter reading on each box. The reading on level A on the target-tracking radar is designated by $A_t$, and the reading for level B is designated by $B_t$. The reading on level A on the missile-tracking radar is designated by $A_m$, and the reading on level B is designated by $B_m$.

*e.* Rotate the antenna mount 3,200 mils in azimuth.

*f.* Rotate the knob on level A and on level B until the ends of the vial bubble in each box line up.

*g.* Read and record the counter reading on each box. This reading on level A on the target-tracking radar is designated by $A'_t$, and the reading on level B is designated by $B'_t$. The reading on level A on the missile-tracking radar is designated by $A'_m$, and the reading on level B is designated by $B'_m$.

*h.* Subtract the readings of *d* above from the readings of *g* above for each level and record (carry plus and minus signs on the differences).

*i.* Algebraically subtract the difference readings obtained from levels A on both antenna mounts $(A'_m - A_m) - (A'_t - A_t)$.

*j.* Algebraically subtract the difference readings obtained from levels B on both antenna mounts $(B'_m - B_m) - (B'_t - B_t)$.

*k.* If the answer, above, exceeds 10 divisions, both antenna mounts must be releveled to within a 2-division difference reading for each level.

*l. Example:*

| *Step* | *Missile Radar* | *Target Radar* |
|---|---|---|
| 4g Level A (3,200~~m~~) | $A'_m$ 5071 | $A'_t$ 5042 |
| 4d Level A | $A_m$ 5070 | $A_t$ 5044 |
| 4h difference | 1 | −2 |
| 4g Level B (3,200~~m~~) | $B'_m$ 5047 | $B'_t$ 5051 |
| 4d Level B | $B_m$ 5049 | $B_t$ 5041 |
| 4h Difference | −2 | 10 |

Difference between target and missile radars

4i Levels A: $(A'_m - A_m) - (A't - A_t) = 1 - (-2) = 3$

4j Levels B: $(B'_m - B_m) - (B'_t - Bt) = (-2) - 10 = -12$

4k In this example the B level difference is out of tolerance. Examination of the readings show the target-tracking radar to be out of tolerance. Therefore, the complete leveling procedure (par. 178) must be completed.

## 148. Step 5, Antenna Optical Checks (Perpendicularity)

(Fig. 135)

The following steps, performed at each antenna mount, will insure that the optical axis is satisfactorily alined to the mechanical axis.

*a.* Energize the missile- and target-tracking radars to include PLATE VOLTS. The TEST switch must be in the TEST position.

*b.* Place the sighting telescope in the telescope mounting bracket.

*c.* Using the track antenna control unit, rotate the antenna to center the sighting telescope vertical reticle on a distant line or point target.

*d.* Record the reading on the azimuth data unit dial.

*e.* Maintain the antenna stationary in azimuth and plunge the antenna approximately 180° in elevation.

*f.* Carefully reverse the sighting telescope in its mount, making certain that it is tight in the mounting V's.

*g.* Rotate the antenna to center the target on the reticle.

*h.* Record the reading on the azimuth data unit dial.

*i.* If the reading recorded in step *h* above is within 0.1 mil of the reading in step *d* above, the optical axis is perpendicular to the elevation shaft within the requirements $(0.1 \div 2 = 0.05$ mil).

*j.* If the difference in the azimuth data unit dial readings is greater than 0.1 mil, determine the average of the two readings and rotate the antenna to set this average reading on the azimuth data unit dial.

*k.* Loosen the sighting telescope azimuth locking clamps, being careful not to rotate the antenna in azimuth, and position the sighting telescope reticle on the target.

*l.* Repeat steps *e* through *i* above until the requirements of *i* are met.

## 149. Step 6, Tracking Radars Data Unit Check

This check is performed after the leveling, optics perpendicularity, and radar collimation checks. The target antenna data unit check need only be performed monthly. Perform the missile antenna data unit check daily. If the optical portion of the collimation check cannot be performed this check cannot be made.

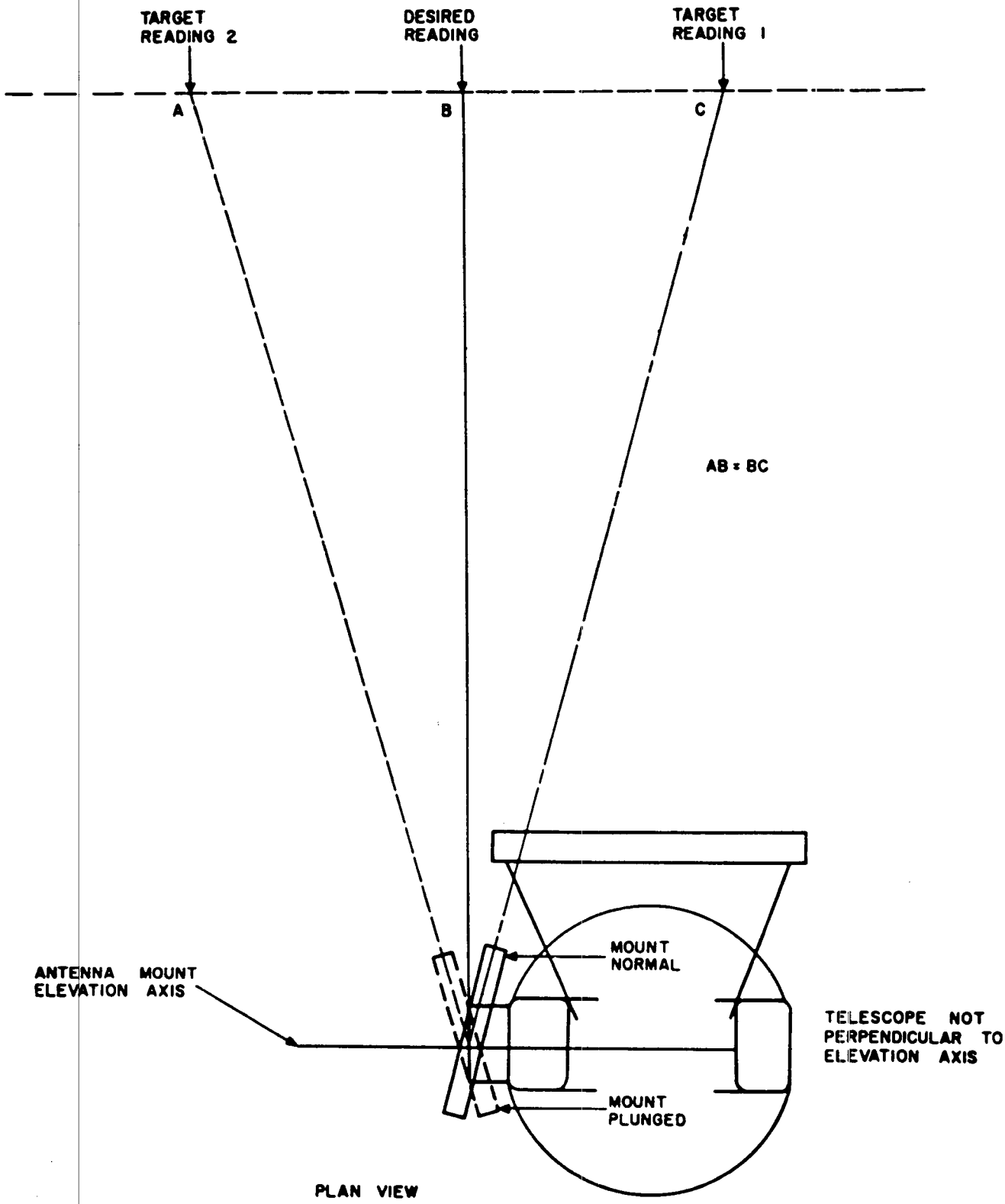


*Figure 135. Perpendicularity check.*

*a. Target Antenna Data Unit.*

(1) Using the track antenna control unit, position the sighting telescope reticle on a known datum point (KDP).

(2) If azimuth or elevation data unit dials do not read the correct azimuth or elevation of the known datum point, loosen the data unit clamp assembly. Rotating the data unit with the clamps tightened will damage the unit. Rotate the data unit dial to the correct reading. Tighten the clamp assembly.

(3) If a known datum point is not available, adjust the azimuth data dial to zero by using a compass or the north star to point the antenna to zero. Rotate the antenna in elevation to level the spirit level on the sighting telescope and adjust the elevation data unit dial to zero.

*b. Missile Antenna Data Unit.*

(1) Place the telescope test targets (fig. 136) on both the missile- and target-tracking radar sighting telescopes.

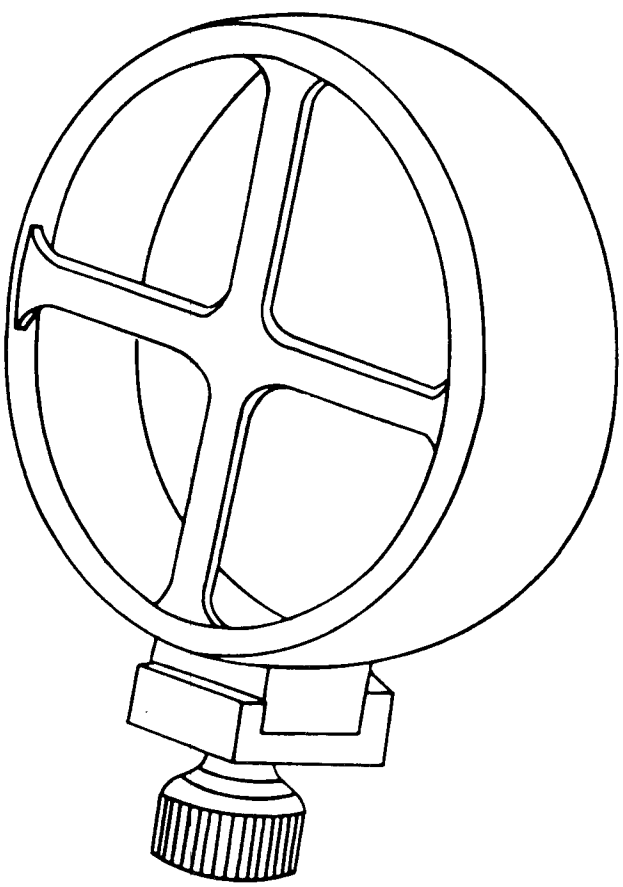

*Figure 136. Telescope test target.*

(2) Reverse one of the sighting telescopes in its mounting bracket. Make sure the telescopes are tight in their mounting V's.

(3) Rotate the tracking antennas so that the two antennas are facing in the same direction and the sighting telescopes are facing each other.

(4) Carefully point the two antennas so that the reticle of each telescope is exactly centered on the test target of the other telescope (fig. 137).

(5) The elevation and azimuth data units on the missile-tracking radar antenna should read the same values as indicated on the target-tracking radar antenna data units to within 0.15 mil. If the difference is greater than 0.15 mil, reset the missile antenna data units to make the readings the same within 0.05 mil.

(6) Leave the tracking antennas in the above position in order to complete the ORIENT CHECK, which follows.

## 150. Step 7, Orient Check

The orient check is performed immediately after the tracking radars data unit check. If the optical portion of the collimation check is not performed, this check cannot be made.

*a.* The target- and missile-tracking radar antenna data units should be at the same readings obtained in paragraph 149*b*(5) (step 6).

*b.* Set the missile- and target-tracking radar range unit dials to the reading specified by maintenance personnel.

*c.* Open the computer amplifier cabinet door. Reset the interlock. Set the ORIENT CHECK switch to the ENABLE position.

*d.* Place the COMPUTER CONDITION switch in the TRACKING position.

*e.* With the SERVO DC switch on the computer power control panel in the OFF position, open the doors of the computer-servo cabinet. Reset the interlock.

*f.* Using the MANUAL DRIVE control of the time-to-impact servo, adjust the time-to-impact servo dial to read 0.1 second.

*g.* Rotate the LOCATION OF MISSILE RADAR FROM TARGET RADAR —X YARDS, —Y YARDS, and —H YARDS controls for zero indication on their respective dials.

*h.* Rotate the VELOCITY AND POSITION DIFFERENCE switch to RADAR DATA

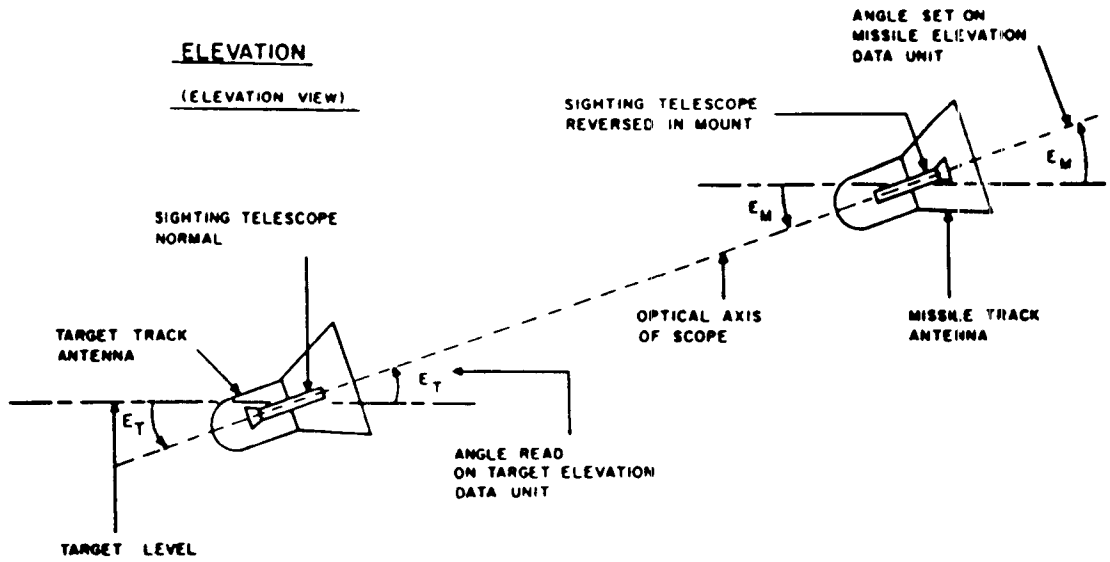


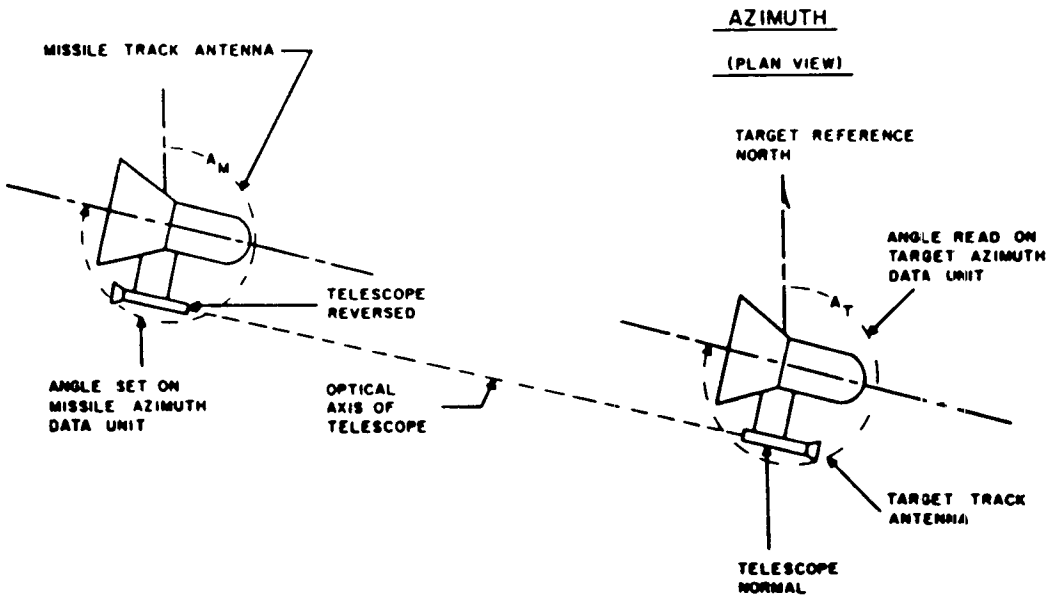


*Figure 137. Data unit adjustment.*

DIFF—YDS—MISSILE FROM TARGET position.

*i.* With the YDS/10 pushbutton pressed, the readings of the VELOCITY AND POSITION DIFFERENCE meters shall be within ±36 for X, Y, or H.

*j.* At the computer amplifier cabinet, depress the ORIENT CHECK DISABLE pushbutton.

*k.* With the YDS/10 pushbutton pressed, the readings on the VELOCITY AND POSITION DIFFERENCE meters should still be within ±36 for X, Y, and H and the magnitude of the readings should be approximately the same as those observed in *i* above.

## 151. Step 8, Test Responder Acquire and Command Test

The missile-tracking radar operator must establish telephone communication with the launcher control trailer to complete this check.

*a.* The computer PLATE VOLTS must be ON and the COMPUTER CONDITION switch must be in the ACTION or the TRACKING position to properly complete this test.

*b.* The missile-tracking radar must be energized to include high voltage.

*c.* Have the launcher control console operator energize the test responder.

*d.* Place the TEST switch on the missile console in the operate (down) position and the LOCAL-DESIGNATE switch in the remote (down) position (DISABLE switch in normal). The missile-tracking radar should automatically slew to the azimuth, elevation, and range coordinates of the test responder.

*e.* The test responder signal should appear in the range notch, and the AZIMUTH and ELEVATION ERROR meters should read approximately zero.

*f.* Three seconds after the COAST light goes out, the missile radar should automatically lock on the test responder signal.

*g.* The test responder signal strength, as indicated on the RECEIVED SIGNAL meter, should be within 0.5 division of previous readings.

*h.* Set the TEST switch to the TEST position (RECEIVER switch in MISSILE).

*i.* Set the CALIBRATOR ON-OFF switch to the ON position.

*j.* Place the FUNCTION switch on the command calibrator consecutively to the BURST, −5G YAW, +5G YAW, −5G PITCH, and +5G PITCH positions. Have the launcher control console operator indicate over the telephone what orders are being received.

## Section III. DAILY TARGET AND MISSILE RADAR CHECKS

### 152. Step 1, General

Step 1 is self-explanatory. The person performing the checks will fill in this information on the check sheets.

### 153. Step 2, Primary Power Tests

*a. General.* Check the LINE VOLTS meter to see that power is available.

(1) Place the PHASE switch in the C position.

(2) Adjust the ADJUST PHASE C control knob to obtain a reading of 120 volts on the LINE VOLTS meter.

(3) Rotate the PHASE switch to the A and B positions. The LINE VOLTS meter should indicate 120 ± 2.5 volts for either position of the switch.

(4) The full load reading of the LINE VOLTS meter should be checked after the tracking radars are completely energized. (120 volts for phase C. Phase A and B, 110 to 122.5 volts.)

(5) Place the MAIN POWER switch on the radar power control panel in the ON position.

*b. Target Check.*

(1) Place the following switches in the ON position.

(*a*) TARGET POWER.

(*b*) TARGET PLATE VOLTS.

(*c*) IND HV.

(2) Place the missile VOLTS CHECK switch in TARGET.

(3) Verify that the VOLTS CHECK meter needle deflections are within the mark at ¾, ½, or ¼ segments, as specified, for each position of the VOLTS CHECK switch.

*c. Missile Check.*

(1) Place the following switches in the ON position.

(*a*) MISSILE POWER.

(*b*) MISSILE PLATE VOLTS.

(*c*) IND HV.

(2) Verify that the VOLTS CHECK meter needle deflections are within the mark at ¾, ½, or ¼ segments, as specified, for each position of the VOLTS CHECK switch.

### 154. Step 3, Target Rf System Check

*a. Magnetron Checks.*

(1) With the MAIN POWER, TARGET POWER, and TARGET PLATE VOLTS switches in the ON position, place the HV SUPPLY control knob on the target control panel in the START position.

(2) Press the HV ON pushbutton.

(3) Adjust the HV SUPPLY control to obtain a reading of 5 ma on the MAGNETRON meter.

*Note.* In subsequent checks of the target-tracking radar, whenever the statement, "Raise the high-voltage" or "Energize the radar through high voltage" is made, the HV SUPPLY knob should be adjusted to give a reading of 5 ma on the MAGNETRON Meter.

(4) Place the MAGNETRON meter switch in the left (KV) position.

(5) The MAGNETRON meter should read between 6.5 and 7.5 kilovolts.

*b. Power Monitor Check.*

(1) With HV off, calibrate the power monitor.

(2) Raise the HV to obtain 5 ma of current.

(3) Record the reading on power monitor db meter. The reading on the db meter plus the SCALE db switch setting should not exceed 6 to 7 db and should be approximately the same from day to day.

*c. Track AFC check.*

(1) Place the TEST switch in the TEST position.

(2) On the test panel:

(*a*) Place the MISSILE-TARGET switch in the TARGET position.

(*b*) Place the TEST SELECTOR switch in the XTAL position.

(3) Observe the RCVR TEST meter and note when the XTAL current stops varying and settles at some steady value. This indicates that the AFC has locked on. Permanent echoes should be visible on the target indicators.

(4) Using the FREQUENCY INCREASE-DECREASE switch, move the magnetron to the upper limit of its frequency range and then to the lower limit of its frequency range. Crystal current should remain steady without any erratic variations. It may vary slowly in amplitude as the magnetron frequency is changed. In no case should it fall to zero.

## 155. Step 4, Missile Rf System Check

*a. Magnetron Checks.*

(1) With the MAIN POWER, MISSILE POWER, and the MISSILE PLATE VOLTS switches in the ON position, place the HV SUPPLY control knob on the missile control panel in the START position.

(2) Press the HV ON pushbutton.

(3) Adjust the HV SUPPLY control to obtain a reading of 13 ma on the MAGNETRON meter.

*Note.* In subsequent checks of the missile-tracking radar, whenever the statement, "Raise the high-voltage" or "Energize the radar through high voltage" is made, the HV SUPPLY knob should be adjusted to cause a reading of 13 ma on the MAGNETRON meter.

(4) Place the MAGNETRON meter switch in the left (KV) position.

(5) The MAGNETRON meter should read between 5.0 and 6.5 kilovolts. If the voltage falls outside these limits, the magnetron may be nearing the end of its life.

*b. Power Monitor Check.*

(1) With the HV OFF, calibrate the power monitor.

(2) Raise the HV to obtain 13 ma of current.

(3) Record the reading on the power monitor db meter. The reading on the db meter plus the SCALE db switch setting should not exceed 3 db.

*c. Track AFC Check.*

(1) Place the TEST switch in the TEST position.

(2) On the test panel:

(*a*) Place the MISSILE-TARGET switch in the TARGET position.

(*b*) Place the TEST SELECTOR switch in the XTAL position.

(3) Observe the RCVR TEST meter and note when the XTAL current stops varying and settles at some steady value. This indicates that the AFC has locked on. Permanent echoes should be visible on the missile indicator.

(4) Using the FREQUENCY INCREASE-DECREASE switch, move the magnetron to the upper limit of its frequency range and then to the lower limit of its frequency range. Crystal current should remain steady without any erratic variations. It will vary slowly in amplitude as the magnetron frequency is changed. In no case should it fall to zero.

## 156. Step 5, Radar Rf TEST SET Checks

*a.* Check and adjust the target-tracking radar transmitter frequency. Record the final setting of the transmitter frequency.

*b.* Check and adjust the missile-tracking radar transmitter frequency. When the bandpass filters are used in the missile beacon receiving antennas, the missile tracking radar transmitter frequency must be within $\pm 3$ mc of the beacon center frequency. Record the final setting of the transmitter frequency.

*c.* Check and adjust the rf test set target oscillator frequency.

*Note.* The target oscillator should be adjusted to the normal target-tracking radar transmitter operating frequency so that collimation is performed at the frequency on which most operation is conducted.

*d.* Set the target oscillator power output as follows:

(1) Rotate the S/N control to its 0-db position.

(2) Detune the MEAS FREQ (frequency meter) control to either end of its frequency range.

(3) Adjust the TARGET OSCILLATOR OUTPUT control for 0-db reading on the meter.

*e.* Check and adjust the rf test set missile oscillator frequency to the frequency of the missile beacon.

*f.* When the correct missile oscillator frequency is obtained, set the missile oscillator power output as outlined in step *d* above.

## 157. Step 6, AGC Check

The following check is to be performed on both the missile- and target-tracking radars.

*a.* Energize the target radar to include plate volts.

*b.* At the target console:

(1) Place the TEST switch in the TEST position.

(2) Place the AGC-MANUAL switch in the AGC position.

*c.* In the radar range and receiver cabinet:

(1) At the missile AFC set the BO ADJ-AFC ZERO switch to the BO ADJ position.

(2) At the target test panel, set the RECEIVER switch to the MISSILE position and the TEST SELECTOR switch to the XTAL position.

(3) Check the RCVR-TEST meter for an indication of crystal current (this is to obtain normal receiver noise).

*d.* Place the TEST SELECTOR switch in the BIAS position.

*e.* Operate and hold the METER BAL switch on the AGC unit. The RCVR-TEST meter should read zero. If not, adjust the METER BAL control.

*f.* With no signal in or near the gate, hold the SUM ZERO switch on the AGC unit in the SUM ZERO position. The RCVR-TEST meter should again read zero. If not, adjust the SUM ZERO control.

*Note.* With the GAIN control set maximum CW and the SUM ZERO switch in SUM ZERO it should be possible to operate the AGC-MANUAL switch in either position and the RCVR-TEST meter should read no more than 1 division from zero.

*g.* Connect the IF test cables to the test jacks on the IF main amplifiers.

*h.* Calibration of the LEVEL metering circuitry. This check need only be performed weekly.

(1) Set up and calibrate the test amplifier so that a 1-volt signal will cause a 1-inch deflection on the range indicator. Adjust the VERT CEN control to position the sweep one-half inch above the centerline.

(2) Place the AGC-MANUAL switch in MANUAL. Rotate the GAIN control completely CCW.

(3) Place the TEST SELECTOR in the LEVEL position and the LEVEL switch in the SUM position.

(4) The RCVR-TEST meter should read zero. If not, adjust the LEVEL ZERO control on the video and phase unit.

(5) Set the ATTENTUATOR control on the IF test panel to 20 db.

(6) Monitor the SUM PULSE jack on the video and phase unit using a test cable with no attenuator connected to the test amplifier. Rotate the receiver GAIN control CW to obtain a 1-inch (1-volt) signal, when locked on in AUTO range, on the range indicator.

(7) The RCVR-TEST meter should read 5 divisions. If not, adjust the LEVEL SENSITIVITY control on the video and phase unit.

(8) Place the AGC-MANUAL switch in the AGC position. Move the signal from the IF test panel completely out of the gate. Disconnect the test amplifier.

*Note.* The noise level as indicated by the RCVR-TEST meter will be incorrect if a signal is near the left edge of the gate.

*i.* With no signal in or near the gate (TEST SELECTOR to LEVEL and LEVEL switch to SUM) the RCVR-TEST meter should read a 5-division noise level. If not, adjust the SUM LEVEL control on the AGC unit.

*j.* Observing the range indicator place the signal from the IF test panel in the gate and lock on in AUTO range. Adjust the ATTENUATOR control to obtain a 1 to 1 signal to noise ratio (signal plus noise equals 2). Reduce the ATTENUATOR reading 20 db from the 1 to 1 setting. The RCVR-TEST meter should read a 5-division

signal level for the gated signal. If not, adjust the THRESHOLD control on the AGC unit.

*Note.* If the THRESHOLD control was far out of adjustment, recheck the SUM ZERO and SUM LEVEL as outlined in *f* and *i* above.

*k.* Reduce the ATTENUATOR to 0 db. The meter reading should not exceed 7.5.

*l.* Place the LEVEL switch in AZ. With no signal in the gate the meter should read 2.5 divisions. If not, adjust AZ LEVEL.

*m.* Place the 0 db signal in the gate. The meter should again read 2.5 divisions. If not, adjust AZ SLOPE.

*n.* Rotate the attenuator from 0 to 59 db. The meter reading should remain at $2.5 \pm 1.5$. If not, recheck AZ LEVEL and AZ SLOPE as outlined in *l* and *m* above.

*o.* Place the LEVEL switch in EL. Repeat *l* and *m* above substituting EL LEVEL and EL SLOPE for AZ LEVEL and AZ SLOPE.

*p.* Recheck *f* through *o* above.

## 158. Step 7, Missile AFC Check

The following check is to be performed on both the missile- and target-tracking radar.

*a.* The target-tracking radar should be energized to include high voltage.

*b.* The daily radar rf test set checks should have been completed.

*c.* At the target console place the TEST switch in TEST. Rotate the SIGNAL LEVEL control maximum CCW.

*d.* At the missile console place the TARGET-STANDBY-MISSILE switch in TARGET.

*e.* At the test panel in the radar range and receiver cabinet place the following switches at the positions indicated:

(1) RECEIVER switch to MISSILE.
(2) TEST SELECTOR switch to XTAL.
(3) MISSILE FREQ switch to the position used for the rf test set.

*f.* Set the BO ADJ-AFC ZERO switch on the missile AFC unit to the center position.

*g.* Position the target antenna to the azimuth and elevation of the rf test set.

*h.* Operate the BO SWEEP switch on the missile AFC unit to obtain a signal on the indicators. Place the signal in the range notch and place the range MAN-AID-AUTO switch in AUTO.

*Note.* If the rf test set signal does not appear or is not a good clean signal when the BO SWEEP switch is operated, technical adjustment is necessary.

*i.* Make certain that the AFC is locked on, then adjust the appropriate BO control for maximum crystal current reading on the RCVR-TEST meter.

*j.* With a multimeter, monitor the voltage at TP1 on the missile AFC unit. Adjust the appropriate AFC control on the test panel for 0 volts.

*k.* When the above steps have been completed, point the target-tracking antenna away from the rf test mast and point the missile-tracking antenna at the rf test mast. Using the appropriate switches and controls, perform steps *a* through *j* above for the missile radar.

## 159. Step 8, Receiver Sensitivity Checks

This procedure is written for the target-tracking radar. Using the appropriate switches and controls, it applies equally to the missile-tracking radar. It is based on an approximate distance of 600 feet to the collimation mast assembly.

*a. Preliminary Setup.*

(1) Energize the target radar to include high voltage.
(2) At the missile console, set the TARGET-STANDBY-MISSILE switch to the TARGET position.
(3) At the target console:
  (*a*) Set the TEST switch to the TEST position.
  (*b*) Prepare the test amplifier for use.
  (*c*) At the target range indicator, set the IMAGE SPACING switch to the OFF position.
(4) Set the RECEIVER switch to MISSILE.
(5) At the rf test set, the target oscillator output should have been set to the proper level. The rest of this check procedure depends on the proper operation of the rf test set.

*b. Test Procedure.*

(1) Acquire the rf test set with the target radar and place the azimuth, the elevation, and the range MAN-AID-AUTO switches in the AUTO position. Read and record the azimuth, elevation, and range to the test mast.
(2) Set the azimuth, elevation, and range MAN-AID-AUTO switches to the MAN position. Check to see that the dials still indicate the readings noted in (1) above.
(3) Using the test amplifier, monitor the SUM PULSE jack on the target radar

video and phase unit. Set the test amplifier ATTENUATOR and GAIN controls to produce approximately a 1-inch deflection on the range indicator.

(4) Starting with the SIGNAL LEVEL on the target console at 0 db, rotate the control slowly in a CCW direction while observing the test signal on the range indicator. The receive noise level will increase as the signal is attenuated. Continue the movement of the control until the test signal is just barely visible in the noise. The SIGNAL LEVEL dial reading for this condition should be a minimum of 24 db; 26 db to 30 db should be expected.

*Note.* If medium or heavy interference from other radar transmitters is present, it may pull the missile AFC off the rf test set signal. Therefore, when determining the minimum discernible signal, make certain that the missile AFC is not being pulled, thereby causing the test signal to disappear before it should.

(5) Monitor the AZ ERROR PULSE jack on the video and phase unit.

(6) Position the target-tracking antenna to produce a 15-mil pointing error as read on the azimuth dials.

(7) Repeat step 4 (par. 155). The SIGNAL LEVEL dial should indicate a minimum of 18 db; 20 db to 24 db should be expected.

(8) Monitor the EL ERROR PULSE jack on the video and phase unit.

(9) Return the target antenna to its on-target position in azimuth and displace it 15 mils in elevation.

(10) Repeat step 4 (par. 159). The SIGNAL LEVEL dial should indicate a minimum of 18 db; 20 to 24 db should be expected.

## 160. Step 9, Range Modulator, Range Error Detector Check

The following procedure applies to both the missile- and target-tracking radars.

*a.* Place the MANUAL-AGC switch on the control panel in AGC, the TEST-OPERATE switch in TEST, and the COAST-DISABLE switch in the DISABLE position.

*b.* Place the range MAN-AID-AUTO switch in the AUTO position.

*c.* Place the TEST-OPERATE switch, located on the range error detector, in the TEST position. The RANGE ERROR meter in the radar range and receiver cabinet should read zero and the range unit dials should remain stationary. If not, adjust range BAL 3 to zero the meter and adjust the modulator TRANS BAL to stop the dials.

*d.* With only noise in the range notch, place the TEST-OPERATE switch on the range error detector in the OPERATE position. The range unit dials should remain nearly stationary. If not, adjust range BAL 2.

## 161. Step 10, Angle Modulator Balance Check

This check is performed on the azimuth and elevation angle modulators of both radars.

*a.* On the console drawer place the TEST switch in the TEST position and the DISABLE switch in the DISABLE position.

*b.* Press the balance pushbutton S1 on the angle modulator. The azimuth or elevation dials associated with the modulator should remain stationary. If there is a transient motion, it should slow down and stop.

*c.* Place the appropriate MAN-AID-AUTO switch in the AUTO position.

*d.* If any motion is observed, stop it by means of the BAL control on the modulator.

## 162. Step 11, Angle Error Detection System Check

This check is to be performed for azimuth and elevation of both the missle- and target-tracking radars.

*a.* Set the TEST switch to the TEST position. Set the DISABLE switch to the DISABLE position. Set the AGC-MANUAL switch to the MANUAL position; rotate the GAIN control fully CCW.

*b.* Remove the cable from the GAIN INPUT jack on the error pulse rectifier. With the HI-LOW SENSITIVITY switch on the test panel in the HI position, the ANGLE ERROR meter should read zero. If not, adjust the ZERO ADJ control on the test panel.

*c.* Replace the GATE INPUT cable. The ANGLE ERROR meter should still read zero in the HI position. If not, adjust the GATE BAL control on the error pulse rectifier.

*d.* Rotate the TARGET-STANDBY-MISSILE switch to the TARGET position. Set the AGC-MANUAL switch to the AGC position.

*e.* Acquire the rf test set and lock on the signal in AUTO range.

*f.* At the video and phase unit, remove the cable from the AZ OUT jack.

*g.* The ANGLE ERROR meter should read zero in the HI position. If not, adjust the MOD BAL control on the angle error detector.

*h.* Replace the AZ OUT cable.

*i.* Slew the range to a point where no signal is in or near the gate. Place the azimuth MAN-AID-AUTO switch in AUTO. The azimuth dials should oscillate slightly but should have no continuous rotation. If necessary, adjust the LIMIT LEVEL control.

*j.* Repeat the above outlined procedure for elevation and for the missile-tracking radar.

## 163. Step 12, Angle Sensitivity Check

*a.* This check is to be performed for azimuth and elevation of both the missile- and target-tracking radars. Place the following switches in the positions indicated:

(1) The TEST switch at TEST.

(2) The RECEIVER switch on the test panel at MISSILE.

(3) The TARGET-STANDBY-MISSILE switch at TARGET.

*b.* Set the SIGNAL LEVEL dial to its 0 db position for the target-tracking radar (maximum CCW position for the missile-tracking radar).

*c.* Lock on the rf test set signal with the target-tracking radar and record the azimuth and elevation dial readings. Return the azimuth and elevation MAN-AID-AUTO switches to MAN.

*d.* A plus 5-mil movement of the antenna from the readings obtained in *c* above, should produce a plus 5-mil reading on the appropriate ANGLE ERROR meter.

*e.* A minus 5-mil movement should produce a minus $5 \pm 1$ mil reading. A plus or minus 15-mil movement of the antenna from the readings noted in *c* above should produce a plus or a minus 12- to 22-mil reading on the appropriate ANGLE ERROR meter.

*f.* Repeat the above procedure for the missile-tracking radar.

## 164. Step 13, Automatic Tracking Control Check

This check is to be performed on both missile- and target-tracking radars.

*a.* Set the TEST switch to the TEST position. Set the AGC-MANUAL switch to the AGC position. Set the TEST SELECTOR switch to LEVEL.

*b.* With normal noise on the indicators and no signal gated, the COAST lamp should be on.

*c.* Rotate the TARGET-STANDBY-MISSILE switch to the TARGET position. Set the SIGNAL LEVEL control to 0 db.

*d.* Acquire the rf test set and lock on in range. The COAST light should be out.

*e.* Set the MAN-AGC switch to MAN. Observing the RCVR TEST meter adjust the GAIN control for center scale reading in SUM LEVEL.

*f.* Using MAN range, increase the range reading. The COAST light should come on at $50 \pm 10$ yards overrange.

*g.* Using MAN range, decrease the range reading. The COAST light should come on at $50 \pm 10$ yards underrange.

*h.* Repeat the above procedure for the missile-tracking radar.

## 165. Step 14, Range Calibrate

This check is performed on both the target and the missile range units.

*a.* At the target console—

(1) Slew the target range unit to approximately 4,000 yards.

(2) Place the TEST switch in the TEST position and the MAN-AID-AUTO switch in the MAN or AID position.

(3) Place the RANGE CALIBRATE-ZERO switch in the CALIBRATE position.

*b.* In the radar range and receiver cabinet:

(1) Place the METER switch at the METERS (on) position.

(2) Adjust the PHASE control to obtain a zero indication on the TARGET ERROR meter. Correct adjustment is indicated by a plus and a minus deflection of the TARGET ERROR meter when the PHASE control is rocked back and forth a small amount and the COAST lamp not lighted.

*c.* Observing the TARGET ERROR meter, slew the range successively to 6,000, 8,000, 10,000, 20,000, 30,000, 40,000 and 50,000 yards. Coast light should not be lighted at any of these. It should read zero $\pm$ 3. If the reading exceeds $\pm$ 3, adjust the FREQ ADJ control on the timing wave generator to zero the meter.

*d.* If adjustment of the FREQ ADJ control is necessary, return the range unit to 4,000 yards and rezero the TARGET ERROR meter with the PHASE control, and recheck out to 50,000 yards. Repeat the above procedure as often as necessary to obtain the required reading.

*e.* Place the RANGE CALIBRATE-ZERO switch in the center position.

*f.* Repeat the above outlined procedure for the missile range unit.

*Note.* The TARGET PLATE VOLTS must be on when calibrating the missile range unit.

## 166. Step 15, Target Range Zero Adjust

A corner reflector should be used for range zeroing when available.

*a. Range Zero Using a Corner Reflector.*

(1) Lock on the corner reflector echo in automatic range.

(2) The range unit dials should read the surveyed range to the corner reflector.

(3) If adjustment is required, call maintenance personnel.

*b. Range Zero Using Zeroing Pips.*

(1) Place the TEST switch in TEST and the RANGE-CALIBRATE-ZERO switch in ZERO.

(2) Place the RECEIVER switch on the test panel in TARGET.

(3) Raise the high voltage.

(4) Lock on the fourth zeroing pip in automatic range and record the range unit dial reading.

(5) Lock on the second zeroing pip and record the range.

(6) Subtract the reading obtained in (5) above from the reading obtained in (4) above. This should be the correct reading for the second zeroing pip.

(7) Place the RANGE CALIBRATE-ZERO switch in NORMAL.

(8) If adjustment is necessary, call maintenance personnel.

## 167. Step 16, Missile Range Zero Adjust

A corner reflector should be used for range zeroing when available.

*a. Range Zero Using Corner Reflector.*

(1) Place the TEST switch in TEST.

(2) Place the RECEIVER switch on the test panel in TARGET.

*Note.* If a modified range unit is being used, the range unit TEST-NORMAL should be in the NORMAL position.

(3) Raise the high voltage.

(4) Lock on the echo (radar) from the corner reflector in automatic range.

(5) The range unit dials should read the surveyed range to the corner reflector minus the missile response time in yards.

(6) If adjustment is required, call maintenance personnel.

*b. Range Zero Using Zeroing Pips.* This method is used if a surveyed corner reflector is not available.

(1) Place the TEST switch in TEST and the RANGE CALIBRATE-ZERO switch in ZERO.

(2) Place the test panel RECEIVER switch in TARGET.

*Note.* If a modified range unit is being used, check the TEST-NORMAL switch for the NORMAL position.

(3) Raise the high voltage.

*Note.* The second pip of each pair of zeroing pips is the radar pulse and is the one used in checking range zero.

(4) Lock on the second pip of the fourth pair in automatic range and record the reading of the range unit dials.

(5) Lock on the second pip of the second pair of pips and record the range.

(6) Subtract the reading recorded in (5) above from the reading recorded in (4) above. Subtract the missile response time in yards. This should be the range reading of the second pip of the second pair.

(7) Place the RANGE CALIBRATE-ZERO switch in NORMAL.

(8) If adjustment is required, call maintenance personnel.

## 168. Step 17, Coding Interval Check

In order to minimize the possibility of pairing an incorrect radar and coder pulse, the range zeroing pips should not be used to check the coding interval.

*a.* Place the TEST switch in TEST.

*b.* Place the RECEIVER switch on the test panel in TARGET.

*c.* Raise the high voltage.

*d.* Lock on the radar pulse echo from the corner reflector or a suitable fixed echo in automatic range. Record the range unit dial reading.

*e.* Lock on the coder pulse echo from the corner reflector or a suitable fixed echo in automatic range. Record the range unit dial reading.

*f.* Subtract reading *e* above from reading *d* above. The difference should be equal to the coding interval in yards plus 16 yards.

## 169. Step 18, Collimation Check

(figs. 138 and 139)

The system should be allowed to reach its normal operating temperature before making this check. The check should be made at approximately the same hour each day. If the optical checks listed in *a*(4), (8), and (9) below are not performed due to poor visibility, do not perform steps 6 and 7 of the system daily checks.

*a. Target-Tracking Radar.*

(1) Place the following switches in the positions indicated.

(*a*) TEST switch to TEST.

(*b*) RECEIVER switch to MISSILE.

(*c*) TARGET-STANDBY-MISSILE switch to TARGET.

(2) Acquire and automatically track the rf test set signal.

(3) Read and record the azimuth and the elevation data unit dials.

(*a*) Subtract the elevation data unit dial reading from 3,200 mils.

(*b*) Add or subtract 3,200 mils from the azimuth data dial reading to obtain resultant figure between 0 and 6,400 mils.

(4) Observe and record the readings where the telescope reticles fall on the collimation mast azimuth and elevation targets.

(5) Rotate the antenna 3,200 mils in azimuth and plunge it in elevation. Again acquire and automatically track the rf test set signal.

(6) Read and record the azimuth and the elevation data unit dials.

(7) Compare the azimuth and the elevation readings obtained in (6) with the readings determined in (3)(*a*) and (*b*) above. The readings should not differ by more than 0.2 mil.

(8) Again observe and record the readings where the telescope recticles fall on the collimation mast azimuth and elevation targets.

(9) Algebraically add the azimuth or the elevation readings obtained in (4) and (8) above. Divide the resultant figures for each by 2. This is the required optical target reading. Compare the target readings obtained in (4) above with the required reading. If either azimuth or elevation readings differ from the required reading by more than 1 division it will be necessary to adjust the collimation. CAUTION: It will be necessary to repeat the check if any subsequent adjustment is made to the angle error detector, error pulse rectifier, or receiver phasing.

*b. Missile-Tracking Radar.*

(1) Place the following switches in the positions indicated.

(*a*) TEST switch to TEST.

(*b*) RECEIVER switch (missile test panel) to MISSILE.

(*c*) TARGET-STANDBY-MISSILE switch to MISSILE.

(2) Repeat (2) through (9) above for the missile radar.

## 170. Step 19, Dither Checks

This step should be performed immediately after step 18.

*a. Target-Tracking Radar.*

(1) Acquire and automatically track the rf test set signal.

(2) Return the elevation MAN-AID-AUTO switch to MAN.

(3) Operate and hold the spring-loaded DITHER switch on the dither oscillator.

(4) Observe the optical target on the radar collimation mast. The peak-to-peak azimuth dither motion should be equal to 1 optical target division. If not, adjust the DITHER control.

(5) Place the elevation MAN-AID-AUTO switch in AUTO and return the azimuth switch to MAN. The elevation dither dither motion should also be equal to one opitical target division. If not, adjust the DITHER control.

*b. Missile-Tracking Radar.*

Repeat the above procedure for the missile-tracking radar.

## 171. Step 20, Command Calibrator Check

The command calibrator is used to check the yaw, pitch, burst, and repetition rate oscillators.

*a.* Place the TEST switch on the control drawer in TEST and turn on the command calibrator power switch. Allow 2 minutes for circuit stabilization.

*b.* Place the FUCNTION switch in the SYS NORM position and check for a zero reading on the meter.

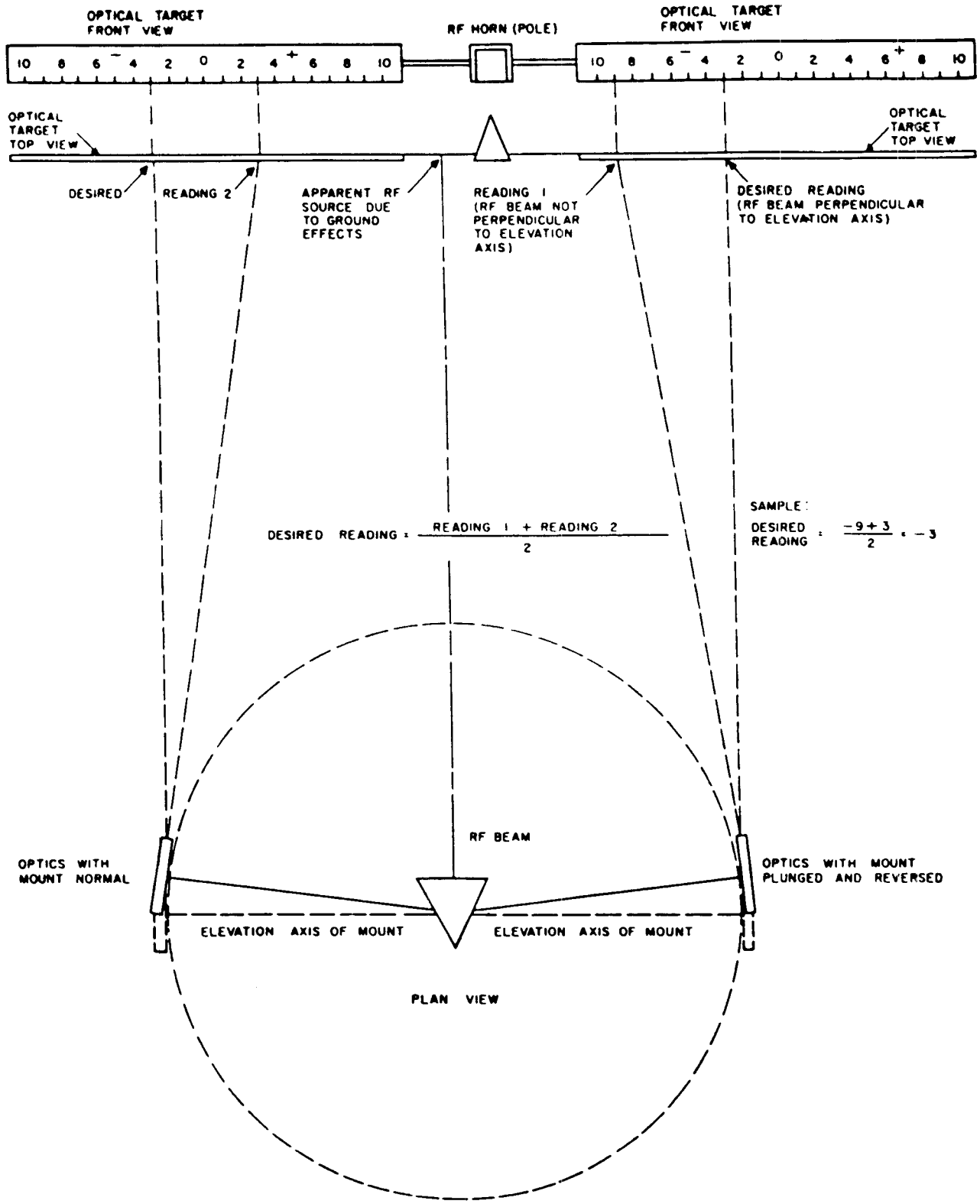


*Figure 138. Azimuth adjustment of radar beam.*

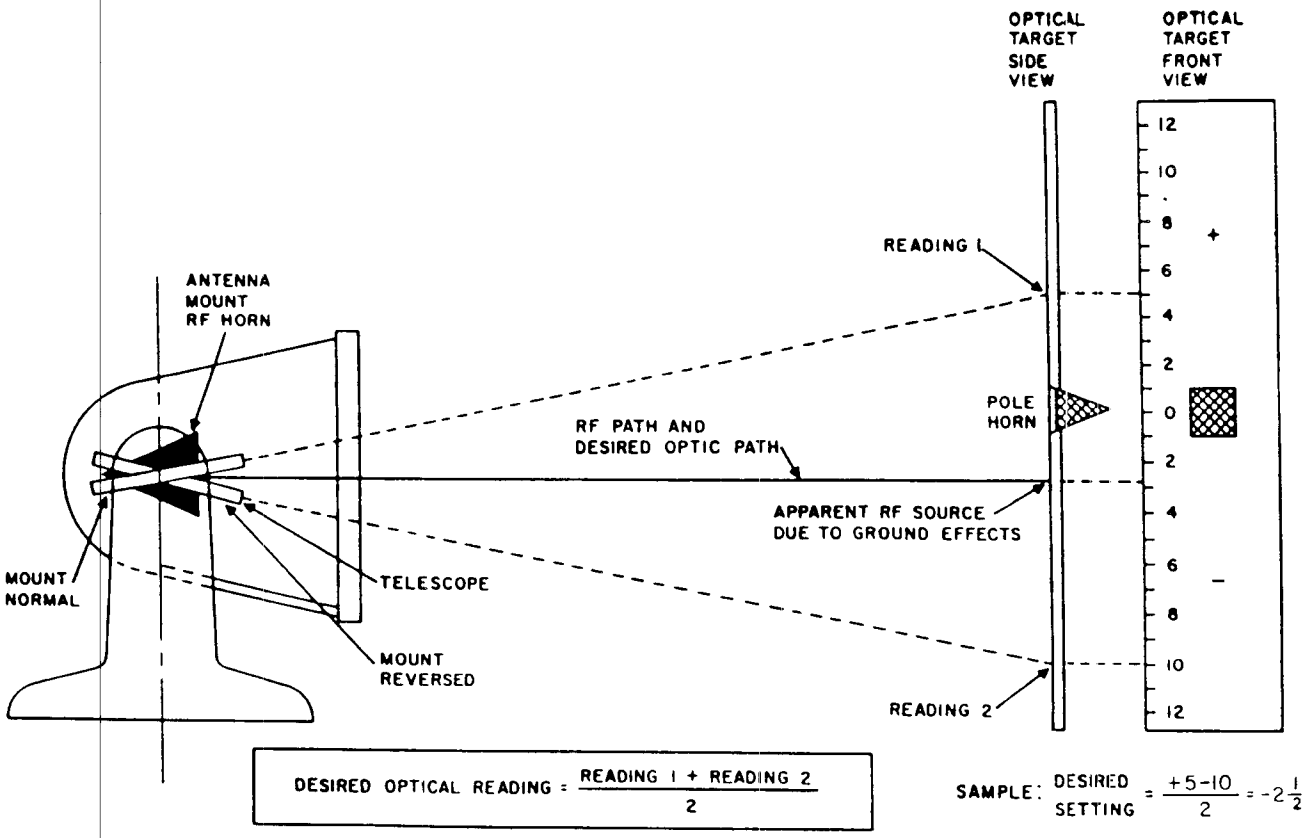


*Figure 139. Elevation adjustment of radar beam.*

*c.* Check the DIV 1, 2, and 3 positions of the FUNCTION switch for 7 steps on the screen.

*d.* With the switch in the MOTOR SPEED position, if there are 14 steps in any pattern standing still on the screen, the command calibrator is ready to be used in checking the oscillators.

*e.* Check the following:

(1) BURST. Check for 4 sine waves which do not move off the screen faster than one per second. Meter reading should be on scale.

(2) AMPLIFIER LINEARITY. The meter should read the same as in the BURST position ±2 scale divisions.

(3) OG YAW. Check for 5 sine waves which do not move off the screen faster than one in 3 seconds. Meter reading should be on scale.

(4) −5G YAW. Check for 4 sine waves which do not move off the screen faster than one in 1.5 seconds.

(5) +5G YAW. Check for 6 sine waves. It should be possible to stop the motion by means of the ERROR control on the calibrator.

(6) OG PITCH. Check for 5 sine waves which do not leave the screen faster than one per second. The meter reading should be on scale.

*Note.* A warmup time is necessary when switching from YAW to PITCH because the pitch oscillator is disabled in any YAW position.

(7) −5G PITCH. Check for 4 sine waves which do not move off the screen faster than 2 per second.

(8) +5G PITCH. Check for 6 sine waves. It should be possible to stop the motion by means of the ERROR control on the calibrator.

(9) O DEV REP RATE. Check for 5 square waves which do not leave the screen faster than 4 per second.

(10) −DEV REP RATE. Check for 4 square waves which do not leave the screen faster than 8 per second.

(11) +DEV REP RATE. Check for 6 square waves. It should be possible to stop the motion by means of the ERROR control on the calibrator.

(12) If adjustments are necessary, call maintenance personnel.

# Section IV. DAILY ACQUISITION RADAR AND COMPUTER CHECKS

## 172. Step 1, General

Step 1 is self-explanatory. The person making the checks will fill in this information in the check sheets.

## 173. Step 2, Primary Power Tests

*a. Acquisition Radar Cabinet.*

(1) Place the PHASE CHECK switch in the C position.

(2) Adjust the ADJUST PHASE C control knob until a reading of 120 volts is obtained on the LINE VOLTS meter.

(3) Place the PHASE CHECK switch in the A and B positions. A reading of 120 ± 2.5 volts should be obtained in each position.

(4) Place the MAIN POWER switch in the ON position. The equipment ventilation blower should start to run. If it does not, operate the EQPT VENT switch to the ON position.

*b. Acquisition Check.*

(1) Place the ACQUISITION POWER switch in the ON position. After a short delay the HIGH VOLTS—PREHEAT lamp should light.

(2) Check the INTLK indicator light. It should be lighted. If it is not, check that all doors and panels associated with the acquisition radar are closed.

(3) After a 30-second time delay the PLATE VOLTS READY lamp should light.

(4) Place the PLATE VOLTS switch in the ON position. This extinguishes the PLATE VOLTS READY lamp and lights the PLATE VOLTS ON lamp.

(5) Using the VOLTS CHECK switch and the VOLTS CHECK meter, insure that the meter needle reading is in the ¾, ½, or ¼ position as prescribed on the check sheet.

## 174. Step 3, Acquisition Radar Check

*a. Energizing Radar.*

(1) Insure that the following switches are in the position indicated.

(*a*) MAIN POWER—ON.

(*b*) ACQUISITION POWER—ON.

(*c*) PLATE VOLTS—ON.

(2) Place the IND HV switch in the ON position.

(3) If the system is provided with equipment for pressurizing the acquisition rotary joint and if it is found necessary to pressurize the joint to prevent waveguide arcing with a particular full-power magnetron, the pressure should be checked daily. If the pressure is not between 10 and 20 pounds per square inch, the magnetron should be operated at reduced power until the proper pressure can be maintained. Some magnetrons will operate without the waveguide arcing even though the compressor is not in use. With such magnetrons the pressure check can be omitted.

(4) Read and record the magnetron FREQUENCY meter reading.

(5) Operate the FREQUENCY switch to DECREASE until the magnetron stop is reached.

(6) With the HV SUPPLY control at START, press the ON pushbutton. Rotate the HV supply control until the proper magnetron current is indicated on the MAGNETRON ma meter.

(7) Place the ANTENNA AZIMUTH switch in the 10, 20, and 30 positions and note that the antenna responds properly.

(8) Adjust the PPI GAIN and INTENSITY controls for proper PPI display. Observe that the PPI has an azimuth line, range circle, and electronic cross.

(9) Rotate the receiver GAIN control until ground return signals are observed on the PPI.

(10) Operate the acquisition FREQUENCY switch to INCREASE. The FREQUENCY meter indication should increase until the magnetron stop is reached. The AFC should remain locked on throughout the tuning range of magnetron as indicated by the continued presence of ground return signals.

(11) Operate the FREQUENCY switch to return the FREQUENCY meter to its original setting, as recorded in (4) above.

(12) Select a target or space point.

(13) Depress the AZIMUTH RING switch and rotate the AZIMUTH control knob to move the azimuth line to the selected target.

(14) Rotate the RANGE handwheel to move the range circle to the selected target.

(15) Place the DESIGNATE-ABANDON switch in the DESIGNATE position.

(16) At the target-tracking radar, press the ACQUIRE switch. Observe that the electronic cross moves to the position of the range circle and azimuth lines.

*b. Acquisition Noise.* Connect the test oscilloscope to the ACQ VID test point (J7) on the video and mark mixer. Turn the receiver GAIN control to its maximum clockwise position. Record the acquisition IF attenuator setting at which noise is three-quarters limiting. A setting of 5 db or less is an indication of excessive loss of amplifier gain.

*c. MTI check.*

(1) Deenergize the acquisition magnetron.

(2) Operate the ANTENNA AZIMUTH switch to OFF.

(3) Rotate the receiver GAIN and STC control knobs to the maximum CCW position.

(4) Operate the MTI switch to ON.

(5) Turn the MTI RANGE control knob approximately one fourth from the CCW limit.

(6) Set the RANGE handwheel to position the range circle on the PPI to greater than 50,000 yards.

(7) Insure that a 30-minute warmup period has elapsed.

(8) Set up the test oscilloscope as directed by maintenance personnel.

(9) Set the MTI controls as follows:

(*a*) Operate the TEST PULSE switch to ON.

(*b*) Place the MON-BAL switch to MON, note the reading on the MTI meter.

(*c*) Set the MTI meter reading to 40 divisions by turning the GAIN SET control.

(10) Proceed with the cancellation adjustment as follows:

(*a*) Adjust the sweep speed on the test oscilloscope to broaden the test pulse so that the details of the pulse can be clearly seen.

(*b*) Turn the AMP BAL control for optimum cancellation of the center portion of the test pulse.

(*c*) Turn the TIME BAL control to minimize and equalize the height of the uncanceled edge spikes.

(*d*) Touch up both the AMP BAL and the TIME BAL controls for optimum cancellations.

(*e*) Place the TEST PULSE switch in the OFF position and reset RECEIVER GAIN to the normal position.

## 175. Step 4, Computer Power Cabinet

*a. Computer Power.*

(1) Place the COMPUTER CONDITION switch in the STANDBY position.

(2) Place the PLOTTING BOARD CONDITION switch in the STANDBY position.

(3) Place the COMPUTER POWER switch in the ON position.

(4) After a 30-second delay, the INTLK READY lamp should light. If it does not, check that all doors and panels associated with the computer are closed.

*b. Plate Volts.* Place the PLATE VOLTS switch in the ON position.

*c. Servo DC.* Place the SERVO DC switch in the ON position.

*d. Volts Check.* Using the VOLTS CHECK switch and the VOLTS CHECK meter, insure that the meter needle reading is in the ¾, ½, or ¼ position as prescribed on the check sheet.

## 176. Step 5, Amplifier Balance (Zero Check)

*a. Servo Setting.*

(1) Place the COMPUTER CONDITION switch in the ACTION position with the TARGET TRACKED lamp not lighted.

(2) Place the GYRO AZIMUTH 100's MILS switch in the 4 position.

(3) Allow the servos to settle.

(4) Place the SERVO DC switch in the OFF position.

(5) With a servo set tool insure that the computer servos are set to the values specified on the check sheet.

*b. Zero Check.*

(1) Place the COMPUTER CONDITION switch in the TRACKING position.

(2) Depress the ZERO CHECK ENABLE pushbutton in either amplifier cabinet.

(3) Turn the radar cleared relay amplifier adjust control to the maximum CCW position.

(4) Place the INT-EXT switch on the zero check meter panel in the INT position.

(5) Rotate the AMPLIFIER SELECTOR switch to each amplifier in turn, depress, and note the meter reading.

(6) If the reading is within the tolerance specified on the check sheet record a check mark. If the reading is not within tolerance record the reading in the column provided.

## 177. Step 6, Built-In Static Tests

*a. Prelaunch.*

(1) Place the COMPUTER CONDITION switch in the PRELAUNCH AND INITIAL TURN position.

(2) Place the LOCATION OF LAUNCHER FROM TARGET RADAR—YARDS X, Y, and H dials to zero.

(3) Place the SERVO DC switch in the ON position.

(4) Rotate the PRELAUNCH & INITIAL TURN static test switch through the eight problems noting and recording the results as indicated on the check sheet.

*b. Initial Turn.*

(1) Condition the computer as in *a* above.

(2) Place the LOCATION OF LAUNCHER FROM TARGET RADAR—YARDS R to the 5000—6000 position.

(3) Balance the RC, CTA, and STA relay amplifiers.

(4) Place the SERVO DC switch in the OFF position.

(5) Using a servo set tool, position the climb angle servo to 1,600 mils.

(6) Repeat the eight prelaunch and initial turn static tests in order. For each problem manually position the turn angle servo to obtain the FIN ORDER meter reading specified on the check sheet. The TA dial reading must be within the limits specified.

*c. Steering Static Test Problems $A_G$ Fixed.*

(1) Place the COMPUTER CONDITION switch in the STEERING position.

(2) Place the SERVO DC switch in the ON position.

(3) Place the GYRO AZIMUTH—100's MILS switch in the 4 position.

(4) Rotate the STEERING static test switch through the eight steering static test problems. Record the $CA$, $t$, $G_Y$ and $G_p$ readings on the check sheet. They must be within the limits specified. $A_G$ must be $400 \pm 4$ mils and the turn angle must be $4 \pm 7$ mils.

(5) Of the eight readings for any quantity, four readings must be less than or equal to the limits specified on the check sheets, six readings must be less than or equal to one and one-half times the limits specified, and all eight readings must be less than or equal to twice the specified limits.

*Note.* For systems on which field change 1407 has been accomplished, modified operational check sheets must be used for the steering static tests.

# Section V. INITIAL, WEEKLY, AND MONTHLY CHECKS

## 178. Initial Adjustments

During initial emplacement, or if some of the tolerances given in paragraphs 141 through 177 are not met, more detailed adjustments must be made. These include leveling, adjustment of the launcher positioning units, determination of radar-to-radar parallax, determination of the launcher orientation corrections ($A_L$ angle), and the launching area-TTR parallax. See TM 9–5000–6 for procedures.

## 179. Weekly and Monthly Checks

In addition to the daily checks required to insure that the equipment is ready to fire in the battery control area, specified weekly and monthly checks must be completed. The log sheets supplied with the equipment and the TM 9–5000-series and TM 9–5001-series prescribe the procedure, checks, tolerances, and adjustments.

# Section VI. PREFIRING CHECKS

## 180. Personnel Requirements

*a.* The following personnel are required to perform the emergency checks and adjustments in the minimum amount of time.

One SAM fire control mechanic in the radar control trailer.

One target-tracking radar azimuth operator in the radar control trailer.

One missile-tracking radar operator in the radar control trailer.

One target-tracking radar range operator at the target-tracking radar.

One target-tracking radar elevation operator at the target-tracking radar.

One computer operator in the battery control trailer.

One acquisition radar operator in the battery control trailer.

One generator operator at the generators.

*b.* The duties and the suggested personnel used in performing the emergency checks are as follows:

(1) SAM fire control mechanic. The mechanic will supervise and closely check the activities of the missile-tracking radar operator and the target-tracking radar azimuth operator. He will personally check any adjustments that are required. He will correct any malfunctions noted.

(2) Target-tracking radar azimuth operator. The target-tracking azimuth operator will perform the checks and adjustments of target-tracking radar under the supervision of the fire control mechanic. He will have the mechanic verify any adjustments that he makes. He will notify the mechanic of any malfunctions or maladjustments noted.

(3) Missile-tracking radar operator. The missile-tracking radar operator will perform the checks and adjustments of the missile-tracking radar under supervision of the fire control mechanic. He will notify the mechanic of any malfunctions or maladjustments noted.

(4) Target-tracking radar range and elevation operators. The target-tracking radar range and elevation operators will, with the assistance of the missile- and target-tracking radar azimuth operators, check the collimation of the tracking antennas. They will check that the optical telescopes are firmly seated and properly mounted and will read the optical target arms during the collimation check.

(5) Computer operator. The computer operator will perform the checks and adjustments of the computer and plotting boards with the assistance of the acquisition radar operator. He will notify the fire control mechanic of any discrepancies in tolerance or malfunctions.

(6) Acquisition radar operator. The acquisition radar operator will perform the checks and adjustments of the acquisition radar and the event recorder. He will also assist the computer operator in performance of the computer checks. In the absence of a switchboard operator, he will establish communications between the missile-tracking and target-tracking radar operators, and the tracking antennas. In event of any malfunctions in acquisition radar or event recorder, he will notify the fire control mechanic.

(7) Generator operator. The generator operator will operate the generators and frequency converters. He will start the generators and allow them to warm properly before putting them under load. On sites that are equipped with frequency converters and drumswitches, he will turn on the frequency converters and apply power to the battery control and radar control trailers from the frequency converter. After the engine generators are sufficiently warmed up, he will transfer the loads from the frequency converters to the engine generators.

*c.* It is essential that the operators be thoroughly trained in the emergency adjustment procedures in order to minimize the time required. The operator personnel can be troop trained. However, care must be used in selecting personnel for operator positions. Personnel who have technical background are in general more capable of absorbing the techniques required and understanding the effects of the adjustment procedure.

## 181. Continuous Power

*a.* Where warning time is expected to be less than 15 minutes, power should be applied to the battery control area equipment continuously. During continuous application of power, the equipment in the battery control area must be operated with low plate voltages on.

*b.* Under conditions of continuous power application to the system, periodic checks of the equipment should be made to determine that it is operational and to correct for any drift which occurs.

*e.* Daily logbook checks are to be performed as prescribed. The periodic checks prescribed herein do not supplant the daily logbook checks.

*d.* Magnetrons should be exercised periodically by the application of high voltage. The track magnetrons should be exercised 15 minutes every 2 hours and the acquisition magnetron 15 minutes every 4 hours.

*e.* The acquisition radar azimuth RPM switch should be left in the OFF position excepting when performing checks or tests.

*f.* (1) To prevent wear of the computer zero-set switches during continuous power operation, a cycle timer has been added to the computer as a modification. The cycle timer will cause the zero-set switches to be operated 30 seconds every 9½ minutes when the computer is in the STANDBY condition.

(2) During the performance of tests and initial warmup period, it is necessary that the zero-set switches are in operation. To insure this, the computer condition switch should be in the PRE-LAUNCH AND INITIAL TURN position or as prescribed by the test conditions.

*g.* When initially placing the equipment into continuous power operation from standby, the emergency checks and adjustments should be applied as prescribed for cold start operation. After the equipment temperature has been stabilized, the prescribed daily log book checks and adjustments should be completed. Checks should then be made at the frequency indicated on the emergency check and adjustment procedures check sheet (par. 212).

*h.* Upon receipt of a warning and time permitting, the following checks of the tracking radars should be performed in order of priority shown:

(1) Sum zero check.

(2) Range zero check if only check coding interval.

(3) Angle sensitivity check.

(4) Collimation check.

*i.* Whenever power is applied to any of the battery control area equipment, it is mandatory that qualified personnel be available to monitor the equipment. The equipment should not be left unattended while power is applied.

## 182. Cold Start

*a.* When operating from a cold start, certain factors will affect the system's accuracy over a period of time. These factors and their effects are—

(1) *Line voltage.* Changes in the line voltage will cause a change in the range zero and will also affect collimation. To minimize this effect, the regulation of the generator should be closely monitored and no adjustments should be made until both the missile-tracking radar and target-tracking radar are fully energized.

(2) *Equipment temperature.*

(*a*) Changes in the temperature of the internal components may introduce differential range errors. Inasmuch as the internal temperature will change from power application until a stable temperature condition is achieved, it is necessary that certain checks be repeated to correct for drifts caused by temperature changes. The frequency of these checks will vary somewhat with individual equipment and with environmental conditions.

(*b*) Tests should be conducted by using personnel to determine the drift characteristics of their equipment. This can be done by observing and recording changes in exhaust temperature, in range to a fixed target, and in collimation for at least a four-hour period after power application. Readings should be taken at approximately 5-minute intervals for the first 2 hours and 15-minute intervals thereafter.

(*c*) Equipment ventilation ports should normally be closed when starting from a cold start. This must be monitored closely so that under certain environmental conditions the equipment will not become excessively hot.

(3) *Operating frequency.*

(*a*) A change in the magnetron operating frequency of the target track magnetron or the magnetron of the missile beacon will affect the electrical axis of the tracking radars. To minimize errors due to the shift of this axis with frequency change, the target oscillator in the rf test set should be set for the operating frequency of the target-tracking radar, and the missile oscillator for the frequency of the missile beacon magnetron.

(*b*) When using the rf test set for test or collimation, the target-tracking radar magnetron should be set at a frequency which will not cause interference with rf test set output. After completion of collimation, the target-tracking radar magnetron should be reset to its normal operating frequency. No restrictions are placed on changing the operating frequency when necessary to combat countermeasures or interference.

(*c*) During collimation, the missile AFC must be properly locked on the rf test set output. Always check that sensing is proper and that the pulse display is undistorted.

(4) *Thyratron drift.*

(*a*) Range errors in the system, may be caused by a change in firing time of the thyratron tube (V1 in the modulator). A change in any one of several factors will cause a thyratron to change its firing time. These are, filament voltage, aging, temperature, biasing voltage, and applied plate voltage.

(*b*) Some of these factors can be controlled and others can not, so it is impossible to predict the performance of any tube from day to day. Therefore, a periodic check of the range zero is required, particularly during the first 2 hours of operation.

(*c*) Since thyratron drift does occur it may also cause a change in the code spacing. To minimize range errors due to changes in code spacing, an additional 0.1 microsecond is added to normal code spacing. If a thyratron has excessive drift, it may result in the loss of the beacon or introduce a large range error to the missile, dependent upon whether the code spacing decreases or increases. This also indicates that code spacing should be periodically checked.

(*d*) A proposed modification which utilizes the thyratron current pulse instead of the preknob pulse to trigger the range unit will correct the thyratron drift as far as ranging in the target radar is concerned. This will not correct for a change of pulse code spacing in the missile radar.

*b. Power Application.*

(1) *Temporary battery-control area sites.* The 30-KW gasoline-driven generator utilized as a power source for the Nike I control system should normally be operated at half speed with no load for at least 5 minutes before the full load is applied. This practice aids in lubrication and partially warms the engine. This interval may be lessened by temporarily closing the air vents to the generator sets. When the normal engine operating temperature of 165° to 180° is attained, the vents should be opened as necessary to avoid overheating the engines.

(2) *Permanent battery-control area sites.* Two commercially powered 60/400-cycle frequency converters (changers) will normally be available at each permanent site. In event of an actual alert, power to the system should be applied immediately from the frequency converter. As soon as the engine-driven generators are capable of accepting the load, transfer of the load should be accomplished to the engine generators by use of the drum switch. The transfer should be accomplished prior to completion of the 10-minute warmup period required by battery-control and radar-control equipment. A battery in a standby condition of readiness of less than 30 minutes will normally use the commercially powered frequency converters as the primary source of power until an actual alert is received.

*c. Acquisition Radar.* The acquisition radar requires no adjustments other than those performed by the operator when energizing the equipment. These procedures have been included in this section to insure that the acquisition radar is in an operating condition at the earliest possible time.

*d. Computer.* The emergency check and adjustment procedure includes checks and adjustments on the plotting boards and event recorder. Even if these were inoperative, it would not prevent the successful engagement of a target. Although these items contribute substantially to the overall operation of the battery and would normally be used in the engagement regardless of whether

or not these checks had been performed, checks on these units can be omitted if the engagement is about to begin. Computer checks can be started as soon as all amplifier unbalance lights are extinguished and normally the emergency check and adjustment procedures for the computer need not be repeated after the initial checks. However, if time permits, the additional checks noted in daily log sheets should be performed.

*e. Tracking Radars.*

(1) The need to track the target before it is necessary to track the missile in the normal engagement sequence dictates that the target-tracking radar be given priority in the adjustment procedures.

(2) *Frequency of checks.*

(*a*) The emergency check and adjustment procedures are based upon the assumption that the equipment will be checked and ready to fire 20 to 30 minutes after power application. If engagement is not imminent upon completion of all checks, certain checks should be repeated. The frequency of the checks are indicated on the emergency procedures check sheets (par. 212).

(*b*) If the equipment is powered for a period greater than 4 hours, checks should be performed at the frequency prescribed for continuous power.

*f. Collimation Check.* The emergency check and adjustment procedures require that the collimation check be completed for both tracking radars.

*g. Corner Reflector.* A fixed target is desirable for range zeroing purposes. This target must be located at a range greater than 4,000 yards. A corner reflector properly emplaced will serve as a suitable fixed target. If a suitable fixed target is not available, use the range calibrate marks.

*h. Format.*

(1) The arrangement and the content of the emergency checks and adjustment procedures is intended to expedite the checks and adjustments by detailed sequential listing of the required steps and repetition of information wherever necessary. An index is included and separate procedures and check sheets are provided for the acquisition radar, computer, target-tracking radar, and missile-tracking radar.

(2) The check sheets are abbreviated and may be used after personnel are thoroughly familiar with the detailed checks. Included in the check sheets is the recommended frequency for repetition of checks and adjustments.

## 183. Checks

*a. Acquisition Radar.*

*b. Power Application and Check.*

*c. Computer.*

(1) Power checks.

(2) Amplifier balance tests (zero check).

(3) Prelaunch built-in static tests.

(4) Initial turn built-in static tests.

(5) Steering static test problems—$A_a$ fixed.

(6) Plotting board checks.

(7) Preaction checks

(8) Event recorder checks.

*d. Tracking Radars.*

(1) Tracking radar power application and check.

(2) Target-tracking radar preliminary checks.

(3) Missile-tracking radar preliminary checks.

*e. Target-Tracking Radar.*

(1) Warmup interval checks.

(2) AGC sum zero check.

(3) Range zero check.

(5) Angle sensitivity check.

(6) Collimation check.

(4) Noise balance check.

(7) Prepare for action.

*f. Missile-Tracking Radar.*

(1) Warmup interval checks.

(2) AGC sum zero check.

(3) Angle sensitivity check.

(4) Collimation check.

(5) Noise balance check.

(6) Range zero check.

(7) Synch command check.

(8) Prepare for action.

## 184. Acquisition Radar

Push equipment ventilation control to CLOSE. Turn PHASE switch to C position. Rotate PHASE ADJUST C control to obtain 120V indication on LINE VOLTS meter. Turn MAIN POWER switch to ON. Turn ACQUISITION POWER switch to ON. Check that blue INTLK light is lit. Check that no blown-fuse indicators are lit. When PLATE VOLTS READY light comes on, set PLATE VOLTS switch to ON. Turn the VOLTS CHECK switch to positions indicated below and verify readings on VOLTS CHECK meter.

| Switch position | Meter segment | Initials |
|---|---|---|
| 250 | 3/4 | |
| 320 | 3/4 | |
| -150 | 3/4 | |
| -220 | 3/4 | |
| -250 | 3/4 | |
| -320A | 3/4 | |
| -320B | 3/4 | |
| -175 | 1/2 | |
| -270 | 1/2 | |
| 28 | 1/4 | |

Turn the azimuth RPM switch to 10 position. Turn IND HV switch to ON position and note that acquisition antenna is rotating at 10 RPM by observing the PPI sweep rotation. Turn azimuth RPM switch to 20 and 30 positions and note that acquisition antenna responds. Operate UP-DOWN-SCAN switch and check ELEVATION dial for corresponding movement. Check magnetron FREQUENCY meter for normal setting . When HIGH VOLTS READY light comes on:

*a.* Turn HV SUPPLY control to START.

*b.* Depress HV SUPPLY ON pushbutton.

*c.* Rotate HV SUPPLY control until MAGNETRON meter indicates 45 ma for half-power magnetron or 60 ma for full-power magnetron.

Check to see that acquisition AFC has locked on as indicated by AFC HUNT light and fixed echoes on PPI. Check PPI and precision indicator for proper presentation. Check EQUIPMENT EXHAUST temperature and adjust equipment ventilation control as required.

## 185. Computer

*a. Power Checks.*

Turn COMPUTER CONDITION switch to ACTION and insure TARGET-TRACKED light is amber.

Turn PLOTTING BOARD CONDITION switch to STANDBY.

Turn COMPUTER POWER switch to ON.

Await illumination of INTLK READY lamp (20–30 sec.).

Turn PLATE VOLTS switch to ON.

Turn SERVO DC switch to ON.

Wait until AMPLIFIER UNBALANCE indicators are extinguished.

Turn VOLTS CHECK switch as indicated below and verify readings on VOLTS CHECK meter:

| Switch position | Meter segment | Initials |
|---|---|---|
| 320A | 3/4 | |
| -320B | 3/4 | |
| -250 | 3/4 | |
| -200A | 3/4 | |
| -200B | 3/4 | |
| -28 | 4 | |
| +75 | 1/2 | |
| +250 | 3/4 | |
| +270 | 1/2 | |
| +320A | 3/4 | |
| +320B | 3/4 | |
| OFF | 0 | |

*b. Amplifier Balance Tests (Zero Checks).*

Turn COMPUTER CONDITION switch to ACTION. Insure TARGET-TRACKED light is amber. Set GYRO AZIMUTH 100's MILS switch to position 4. Allow servo dials to settle.

Turn SERVO DC to OFF.

Turn COMPUTER CONDITION SWITCH to TRACKING.

Press INTLK OVERRIDE switch and open servo and amplifier cabinet doors.

Set cabinet INTLK OVERRIDE and release panel switch.

Press ZERO CHECK ENABLE pushbutton.

Turn RC relay amplifier AMPL ADJ completely counterclockwise.

Set servo dials to following indications:

| Servo dial | Position | Initials |
|---|---|---|
| CA | 1,600 | |
| TA | 0 | |
| T | 44.67 | |
| AG | 397 | |
| B | -565 | |

Turn INTERNAL-EXTERNAL switch to INTERNAL.

Rotate AMPLIFIER SELECTOR switches through each position indicated below.

Press SENSITIVITY button and the AMPLIFIER SELECTOR switch at each indicated position and read ZERO CHECK meter.

Readings shall be within specified tolerances.

| Sw Psn | Zero (Tol + or −) | Reading |
|---|---|---|
| $D_M$ | 2.0 | |
| $-H_M$ | 2.0 | |
| $+R_M$ | 2.0 | |
| $-R_M$ | 2.0 | |
| $H_M$ | 6.0 | |
| $+D_M$ | 6.0 | |
| $+Y_M$ | 7.0 | |
| $-Y_M$ | 5.0 | |
| $+X_M$ | 7.0 | |
| $X_M$ | 5.0 | |
| Remove V3 from OL Limiter Panel. | | |
| $+OL$ | 40.0 | |
| $-OL$ | 40.0 | |
| Replace V3 in OL Limiter Panel. | | |
| $-D_T$ | 6.0 | |
| $+R_T$ | 2.0 | |
| $R_T$ | 2.0 | |
| $+D_T$ | 6.0 | |
| $-H_T$ | 7.0 | |
| $+H_T$ | 5.0 | |
| $-Y_T$ | 7.0 | |
| $+Y_T$ | 5.0 | |
| $-X_T$ | 7.0 | |
| $+X_T$ | 5.0 | |

Press OUTPUT TEST button on RC amplifier.

Turn RC amplifier AMPL ADJ until indicator light just goes out.

Back off RC amplifier AMPL ADJ slightly until light is just lighted.

Release OUTPUT TEST button on RC amplifier.

*c. Prelaunch Built-In Static Tests.*

Turn SERVO DC to ON.

Turn LOCATION OF MISSILE RADAR FROM TARGET RADAR YARDS X, Y, and H controls to ZERO.

Turn LOCATION OF LAUNCHER FROM TARGET RADARS YARDS dials to 5,000–6,000 position and X, Y, and H, control to ZERO position.

Turn COMPUTER CONDITION switch to PRELAUNCH AND INITIAL TURN.

Turn STATIC TEST PRELAUNCH and INITIAL TURN switch as shown below and record observed readings.

| Sw pos | *A a* dial | | | *B* dial | | | *T* dial | | | Tgt grd spd mtr | | |
|---|---|---|---|---|---|---|---|---|---|---|---|---|
| | Min. | Read | Max | Min | Read | Max | Min | Read | Max | Min | Read | Max |
| Prob 1 | 191.3 | | 198.7 | 18.5 | | 39.5 | 36.42 | | 36.88 | 657 | | 803 |
| Prob 3 | 1,551.5 | | 1,582.5 | 724.6 | | 747.4 | 18.46 | | 18.82 | 657 | | 803 |
| Prob 5 | 3,923.3 | | 3,946.7 | −224.8 | | −197.2 | 79.84 | | 83.34 | 657 | | 803 |
| Prob 7 | 6,335.8 | | 6,360.2 | 514.4 | | 537.6 | 16.90 | | 17.24 | 657 | | 803 |

*d. Initial Turn Built-In Static Tests.*

Turn SERVO DC switch to OFF.

Turn CA servo dial to 1,600 mils.

Turn STATIC TEST-PRELAUNCH AND INITIAL TURN switch to sequence of PROBLEM positions indicated below and record observed readings.

Adjust TA servo manually to obtain listed $G_Y$ and $G_P$ values:

| Switch position | | | TA dial | | |
|---|---|---|---|---|---|
| Switch position | $G_Y$ | $G_P$ | Min | Reading | Max |
| Problem 3 | −4.8 to −5.2 | −4.8 to −5.2 | −10 | | +10 |
| Problem 5 | −4.8 to −5.2 | −4.8 to −5.2 | +315 | | +345 |

Turn LOCATION OF LAUNCHER FROM TARGET RADAR-R YARDS dial to correct parallex setting (_____).

Turn STATIC TEST PRELAUNCH AND INITIAL TURN switch to PROBLEM No. 1.

*e. Steering Static Test Problems—$A_G$ Fixed.*

Turn SERVO DC switch to ON.

Turn COMPUTER CONDITION switch to STEERING.

Turn GYRO AZIMUTH switch to POSITION NO. 4.

Perform steering static test problems indicated below and record observed readings.

| Switch position | $C_4$ | | | $T$ dial | | | $G_Y$ meter reading | | | $G_P$ meter reading | | |
|---|---|---|---|---|---|---|---|---|---|---|---|---|
| | Min | Read | Max | Min | Read | Max | Min | Read | Max | Min | Read | Max |
| Problem 2 | 6,008 | | 6,044 | 5.76 | | 5.96 | 0.5 | | 1.3 | −1.5 | | −0.7 |
| Problem 4 | 6,005 | | 6,041 | 10.01 | | 10.37 | 4.2 | | 5.0 | −1.4 | | −0.6 |
| Problem 6 | 358 | | 394 | 33.03 | | 34.83 | 3.5 | | 4.3 | −1.1 | | −0.3 |
| Problem 8 | 358 | | 394 | 77.68 | | 84.96 | 1.5 | | 2.3 | −0.3 | | +0.5 |

For computer on which field change 1407 has been completed, use the following tolerances.

| Switch position | $C_4$ dial | | | $T$ dial | | | $G_Y$ meter reading | | | $G_P$ meter reading | | |
|---|---|---|---|---|---|---|---|---|---|---|---|---|
| | Min | Read | Max | Min | Read | Max | Min | Read | Max | Min | Read | Max |
| Problem 2 | 6,017.0 | | 6,035.0 | 5.799 | | 5.899 | 0.874 | | 1.274 | 0.749 | | 1.149 |
| Problem 4 | 6,013.0 | | 6,031.9 | 10.052 | | 10.232 | 4.935 | | 5.335 | 0.302 | | 0.702 |
| Problem 6 | 367.0 | | 385.0 | 33.555 | | 34.455 | 3.741 | | 4.141 | −0.883 | | −0.483 |
| Problem 8 | 367.0 | | 385.0 | 79.513 | | 83.153 | 1.672 | | 2.072 | −0.113 | | 0.287 |

*f. Plotting Board Checks.* Perform these checks if time permits. If time does not permit, proceed with the PREACTION checks. Turn COMPUTER CONDITION switch to PRELAUNCH AND INITIAL TURN position and set in PRELAUNCH PROBLEM No. 1. Turn PLOTTING BOARD CONDITION switch to REFERENCE MARK and then to STANDBY. Note resultant action.

(1) The right pen on horizontal board should move to center of board and come to rest at origin of coordinates, then return to the standby position.

(2) The left and right pens on the altitude board should move to intersection of 0 altitude and 0 time lines, then return to the standby position.

Turn PLOTTING BOARD CONDITION switch to PLOT and await plotting board stabilization. Turn PLOTTING BOARD CONDITION switch to TEST and then to STANDBY. Operate PEN INTERCHANGE pushbutton. Turn PLOTTING BOARD CONDITION switch to PLOT, and, when pen stabilizes, to TEST; note that position of left pen on horizontal plotting board corresponds with dot previously plotted by right pen. Adjust left pen to coincide as required.

*g. Preaction Checks.*

Set OL THRESHOLD control at ____ feet.

Set BURST TIME BIAS control at ____ milliseconds.

Secure all cabinet doors while depressing INTLK OVERRIDE switch.

Confirm that values listed on PARALLAX DATA RECORD (PDR) are indicated by corresponding dials.

| Dial | Coord | Initials |
|---|---|---|
| LOCATION OF MISSILE RADAR FROM TARGET RADAR—YARDS. | X | |
| Do | Y | |
| Do | H | |
| LOCATION OF LAUNCHER FROM TARGET RADAR—YARDS. | X | |
| Do | Y | |
| Do | H | |
| Do | R | |

Check that all AMPLIFIER UNBALANCE indicators are extinguished.

Check that all fuse indicators are extinguished.

Turn GYRO AZIMUTH 100's MILS switch to position nearest to direction of expected attack.

Turn COMPUTER CONDITION switch to ACTION.

*h. Event Recorder.* If time permits, complete the following checks. If not, turn TEST-OPERATE switch to OPERATE and VIEW-RECORD switch to RECORD, and report READY FOR ACTION. See paragraph 126.1 for values when modified event recorder is being used.

Turn VIEW-RECORD switch to VIEW.

Turn TEST-OPERATE switch to TEST.

Check that VIEW indicator is lighted.

Depress and hold GALVANOMETER ZERO pushbutton.

Open shutter door and observe galvanometer traces on scale.

Galvanometer traces should be positioned as indicated below:

| Channel | Trace zero | Read |
|---|---|---|
| 1-10 | None | |
| 11 | Off scale, left | |
| 12 | 0.9 | |
| 13 | 1.4 | |
| 14 | 2.3 | |
| 15 | 2.4 | |
| 16 | 4.0 | |
| 17 | 5.5 | |
| 18 | 7.0 | |
| 19 | 8.5 | |
| 20 | 10.0 | |
| 21 | 10.5 | |
| 22 | 11.2 | |
| 23 | Off scale, right | |
| 24 | None | |

Close shutter door.

Turn TEST-OPERATE switch to OPERATE.

Turn VIEW-RECORD switch to RECORD.

Check that VIEW indicator is not lighted.

Check that 400 cps and DC POWER indicator lights are lighted.

Check indicator dial for adequate paper supply.

Check EQUIPMENT EXHAUST temperature and adjust equipment ventilation controls if necessary.

## 186. Tracking Radars

*a. Tracking Radar Power Application and Check.*

Push equipment ventilation control to CLOSE.

Turn PHASE switch to C position.

Turn ADJUST PHASE C to obtain 120v indication on LINE VOLTS meter.

Turn MAIN POWER switch to ON.

Turn MISSILE POWER switch and TARGET POWER switch to ON.

When the missile and target PLATE VOLTS READY lights come on, turn the TARGET and MISSILE PLATE VOLTS switches to ON. Turn TARGET VOLTS CHECK switch as indicated below and verify readings on VOLTS CHECK METER

| Switch position | Meter segment | Initials |
|---|---|---|
| 250A | 3/4 | |
| −320A | 3/4 | |
| +150A | 3/4 | |
| +220A | 3/4 | |
| +250A | 3/4 | |
| +320A | 3/4 | |
| +150C | 3/4 | |
| +250C | 3/4 | |
| +320C | 3/4 | |
| +450 | 3/4 | |
| +270 | 1/2 | |
| −28A | 1/4 | |

Turn MISSILE VOLTS CHECK switch as indicated below and verify readings on VOLTS CHECK meter:

| Switch position | Meter segment | Initials |
|---|---|---|
| −250B | 3/4 | |
| −320B | 3/4 | |
| +150B | 3/4 | |
| +220B | 3/4 | |
| +250B | 3/4 | |
| +320B | 3/4 | |
| +150D | 3/4 | |
| +250D | 3/4 | |
| +320D | 3/4 | |
| +450 | 3/4 | |
| +270 | 1/2 | |
| −28B | 1/4 | |

*b. Target-Tracking Radar Preliminary Checks.*

When target HV READY light is lit, press HV SUPPLY ON button.

Turn target HV SUPPLY control to obtain 5 ma on MAGNETRON meter.

Check that target FREQUENCY meter reading is .

Recheck LINE VOLTS meter for 120v indication for phase C. Adjust if necessary.

Turn TEST-OPERATE switch to TEST.

Depress INTLK OVERRIDE switch and open doors on radar range and receiver cabinet.

Set cabinet INTLK OVERRIDE and release panel switch.

Turn test panel MISSILE-TARGET switch to TARGET.

Turn TARGET-STANDBY-MISSILE switch on missile equipment drawer to the TARGET position.

Turn test panel TEST SELECTOR switch to XTAL.

c. *Missile-Tracking Radar Preliminary Checks.*

Set TEST-OPERATE switch to TEST.

Set test panel MISSILE-TARGET switch to TARGET.

Turn TEST SELECTOR switch to XTAL.

When missile HV READY light comes ON, press HV SUPPLY ON button.

Turn missile HV SUPPLY control to obtain 13 ma on MAGNETRON meter.

Check that missile FREQUENCY meter reading is .

## 187. Target-Tracking Radar

a. *Warmup Interval Checks.* If these checks are not complete within 10 minutes after power application, they should be discontinued and the next checks started.

Rotate azimuth handwheel and observe corresponding rotation of azimuth dial.

Rotate elevation handwheel and observe corresponding rotation of elevation dial.

Rotate range handwheel and observe corresponding rotation of range dial.

Operate range SLEW switch and observe corresponding rotation of range dial.

Note that notch on range track indicator moves along the trace.

Operate COAST switch to DISABLE.

Operate SERVO-TEST switch to right hand position.

Turn azimuth MAN-AID-AUTO switch to AUTO.

Observe that azimuth indicator dials rotate to increase readings.

Turn elevation MAN-AID-AUTO switch to MAN.

Return SERVOS TEST switch to center position.

Check for constant current indication on test panel RCVR TEST meter.

Return TEST SELECTOR switch to BIAS position.

Record the coordinates of corner reflector used in range zeroing:

Azimuth . . . . . mils.
Elevation . . . . . mils.
Range . . . . . yards.

Acquire the corner reflector and center signal in range notch. Check automatic tracking in range by displacing range notch approximately 20 yards in range. Then turn the MAN-AID-AUTO switch to AUTO. The reflector signal should immediately center in the range notch. Rotate azimuth handwheel clockwise and counterclockwise. The AZIMUTH ERROR meter should deflect to the right and left respectively.

Rotate the elevation handwheel clockwise and counterclockwise.

The ELEVATION ERROR meter should deflect to the right and left, respectively. Displace the antenna in azimuth and elevation until the respective ERROR meters indicate approximately 5 mils. Then turn the azimuth and elevation MAN-AID-AUTO switches to AUTO. The ERROR meters should immediately return to their zero position.

Return all MAN-AID-AUTO switches to MAN.

Establish telephone communication between the target console and target antenna.

*10 minutes after power application*, perform the following checks and adjustments on the target-tracking radar.

b. *AGC Sum Zero Check*

Make certain that only noise appears in range notch.

Turn tracking console AGC-MANUAL switch to AGC.

Operate SUM ZERO switch on AGC unit.

Read RCVR TEST meter on test panel.

If necessary, adjust SUM ZERO control to obtain zero on meter.

Release SUM ZERO switch on AGC unit.

c. *Angle Sensitivity Check.*

Operate test panel MISSILE-TARGET switch to MISSILE.

Turn rf test set MISSILE-STANDBY-TARGET switch to TARGET.

Turn rf test set attenuator to the strong signal position.

Acquire rf test set by pointing radar to ... mils azimuth and mils elevation.

Operate missile AFC unit B. O. SWEEP switch until test signal appears on track indicators.

Operate the range SLEW switch and handwheel to center signal in range notch.

Turn range MAN-AID-AUTO switch to AUTO.

Turn elevation MAN-AID-AUTO switch to AUTO.

Turn azimuth handwheel clockwise until azimuth dial reading is 10 mils greater than locked-on reading.

AZIMUTH ERROR meter should read between 6 and 14 divisions right.

Return azimuth handwheel to locked-on coordinate.

Turn azimuth MAN-AID-AUTO switch to AUTO.

Turn elevation MAN-AID-AUTO switch to MAN.

Turn elevation handwheel clockwise until elevation dial reading is 10 mils greater than locked-on reading.

Turn elevation MAN-AID-AUTO switch to AUTO.

f. *Collimation Check.*

(1) Place the following switches in the position indicated:

(*a*) TEST switch to TEST.

(*b*) RECEIVER switches to MISSILE.

(*c*) TARGET-STANDBY-MISSILE switch to TARGET.

(2) Acquire and automatically track the rf test set signal.

(3) Read and record the azimuth and elevation data dial readings.

(*a*) Subtract the elevation data dial reading from 3,200 mils.

(*b*) Add or subtract 3,200 mils from the azimuth data dial reading to obtain resultant figure between 0 and 6,400 mils.

(4) Observe and record the readings where the telescope reticles fall on the collimation mast azimuth and elevation targets.

(5) Rotate the antenna 3,200 mils in azimuth and plunge it in elevation. Again acquire and automatically track the rf test set signal.

(6) Read and record the azimuth and elevation data dial readings.

(7) Compare the azimuth and elevation readings obtained in (6) above with the readings in (3)(*a*) and (*b*) above. The readings should not differ by more than 0.2 mils.

(8) Again observe and record the readings where the telescope reticles fall on the collimation mast azimuth and elevation targets.

(9) Algebraically add the azimuth or the elevation readings obtained in (4) and (8) above. Divide the resultant figures for each by 2. This is the required optical target reading. Compare the figures actually read with the required figures. If either azimuth or elevation readings differ from the required reading by more than 1 division it will be necessary to adjust the collimation.

***Caution:*** It will be necessary to repeat the check if any subsequent adjustment is made to the angle error detector, error pulse rectifier, or receiver phasing.

(10) Turn rf test set MISSILE-STANDBY-TARGET switch to STANDBY.

(11) Turn all MAN-AID-AUTO switches to MAN.

g. *Noise Balance Check.*

Set test panel MISSILE-TARGET switch to TARGET.

Check to see that only noise is present in the range notch.

Turn azimuth MAN-AID-AUTO switch to AUTO.

If azimuth indicator dials rotate steadily in one direction, stop this movement by adjustment of LIMIT LEVEL control on azimuth angle error detector.

Turn azimuth MAN-AID-AUTO switch to MAN.

Turn elevation MAN-AID-AUTO switch to AUTO.

If elevation dials rotate steadily in one direction, stop this motion by adjusting the elevation angle error detector LIMIT LEVEL control. Turn elevation MAN-AID-AUTO switch to MAN.

Turn range MAN-AID-AUTO switch to AUTO.

If range indicator dials rotate steadily in one

direction, stop this motion by adjustment of RANGE BAL 2 control on range error detector.

Turn range MAN-AID-AUTO switch to MAN.

C 6 *f. Range Zero Check.* Coordinates of corner reflector used in range zeroing are—

Azimuth . . . . . mils.
Elevation . . . . . mils.
Range . . . . . yards.

Center reflector signal in range notch and turn all MAN-AID-AUTO switches to AUTO. Range unit dials should indicate . . . . . yards. If necessary, adjust the worm drive adjustment on the range unit phase capacitor C9 to correct the dial reading. *Where a suitable fixed echo is not available, use the following method:*

(1) *Place the TEST switch in TEST and the RANGE CALIBRATE-ZERO switch in ZERO.*
(2) *Place the RECEIVER switch on the test panel in TARGET.*
(3) *Raise the high voltage.*
(4) *Lock on the fourth zeroing pip in automatic range and record the range unit dial reading.*
(5) *Lock on the second zeroing pip and record the range.*
(6) *Subtract the reading recorded in (5) above from the reading recorded in (4) above. This should be the correct range reading of the second zeroing pip.*
(7) *Place the RANGE CALIBRATE-ZERO switch in NORMAL.*
(8) *If adjustment is required, call maintenance personnel.*

*g. Prepare for Action.*

Set DISABLE switch to down position.
Set TEST-OPERATE switch to OPERATE.

## 188. Missile-Tracking Radar

*a. Warmup Interval Checks.* If these checks are not completed within 10 minutes after power application, they should be discontinued and the next checks started.

Set COAST switch to DISABLE.
Rotate azimuth handwheel and observe corresponding rotation of azimuth dials.
Rotate elevation handwheel and observe corresponding rotation of elevation dials.
Rotate range handwheel and observe corresponding rotation of range dials.
Note that notch on range indicator moves along the trace.
Operate range SLEW switch and observe corresponding rotation of range dials.
Operate SERVO TEST switch to right hand position.
Turn azimuth MAN-AID-AUTO switch to AUTO.
Observe that azimuth dials rotate to increase readings.
Turn azimuth MAN-AID-AUTO switch to MAN.
Turn elevation MAN-AID-AUTO switch to AUTO.
Observe that elevation dials rotate to increase readings.
Turn elevation MAN-AID-AUTO switch to MAN.
Return SERVO TEST switch to center position.
Check for constant current indication on test panel RCVR TEST meter.
Set TEST SELECTOR switch to BIAS position.
Coordinates of corner reflector used in range zeroing are—

Azimuth . . . . . mils.
Elevation . . . . . mils.
Range . . . . . yards.

Acquire the corner reflector and center signal in range notch.
Check automatic tracking in range by displacing range notch approximately 20 yards in range, then turn MAN-AID-AUTO switch to AUTO. Signal should immediately center in range notch.
Rotate azimuth handwheel clockwise and counterclockwise. The AZIMUTH ERROR meter should deflect to the right and left respectively.
Rotate the elevation handwheel clockwise and counterclockwise. The ELEVATION ERROR meter should deflect to the right and left respectively. Displace the antenna in azimuth and elevation until the respective ERROR meters indicate approximately 5 mils. Then turn the azimuth and the elevation MAN-AID-AUTO switches to AUTO position. The ERROR meters should immediately return to their zero position.
Return all MAN-AID-AUTO switches to MAN.

Establish telephone communications between the missile console and missile-tracking radar antenna.

*10 minutes after power application*, perform the following checks and adjustments on the missile-tracking radar.

*b. AGC Sum Zero Check.*

Determine that only noise appears in range notch.

Turn tracking console AGC-MANUAL switch to AGC.

Operate SUM ZERO switch on AGC unit.

Read RCVR TEST meter on test panel.

If necessary, adjust SUM ZERO control to obtain zero on meter.

Release SUM ZERO switch on AGC unit.

*c. Range Zero Check.* Coordinates of corner reflector used in range zeroing are—

Azimuth _____ mils.
Elevation _____ mils.
Range _____ yards.

(When a corner reflector is used for range zeroing of the missile radar, actual distance to reflector minus the missile beacon delay must be indicated by the range unit.)

Center the reflector signal which results from the missile-tracking radar pulse in the range notch.

Turn all MAN-AID-AUTO switches to AUTO.

Check that range unit dial reading is ____ yards. If necessary, adjust the worm drive adjustment on the range unit phase capacitor C9 to correct the dial reading.

Turn all MAN-AID-AUTO switches to MAN.

Center the reflector signal which results from the missile radar coder pulse in the range notch. The range unit dials should indicate a reading equal to the radar range to the reflector (obtained above) minus the code spacing in yards. Dial reading ____ yards. If necessary, adjust the CODER FINE control in missile console to correct the dial reading.

Where a suitable fixed echo is not available, use the following procedure:

(1) *Place the TEST switch in TEST and the RANGE CALIBRATE-ZERO switch in ZERO.*

(2) *Place the test panel RECEIVER switch in TARGET.*

*Note.* If a modified range unit is being used, check the TEST-NORMAL switch for the NORMAL positive.

(3) *Raise the high voltage.*

*Note.* The second pip of each pair of zeroing pips is the radar pulse and is the one used in checking range zero.

(4) *Lock on the second pip of the fourth pair in automatic range and record the reading of the range unit dials.*

(5) *Lock on the second pip of the second pair and record the range.*

(6) *Subtract the reading in (5) above from the reading in (4) above. Subtract the missile response time in yards. This should be the range reading of the second pair.*

(7) *Place the RANGE CALIBRATE-ZERO switch in NORMAL.*

(8) *If adjustment is required, call maintenance personnel.* and check coding [illegible]

*d. Angle Sensitivity Check.*

Operate test panel MISSILE-TARGET switch to MISSILE.

Turn rf test set MISSILE-STANDBY-TARGET switch to MISSILE.

Turn rf test set attenuator to the strong signal position.

Acquire rf test set by pointing radar to ____ mils azimuth and ____ mils elevation.

*Note.* Use spare launcher position units previously adjusted to acquire rf test set.

Operate missile AFC B. O. SWEEP switch until test signal appears on track indicator.

Operate the range SLEW switch and range handwheel to center signal in range notch.

Turn range MAN-AID-AUTO switch to AUTO.

Turn elevation MAN-AID-AUTO switch to AUTO.

Turn azimuth handwheel clockwise until azimuth dial reading is 10 mils greater than locked-on reading.

AZIMUTH ERROR meter should read between 6 and 14 divisions to the right.

Turn azimuth MAN-AID-AUTO switch to AUTO.

Turn elevation MAN-AID-AUTO switch to MAN.

Turn elevation handwheel clockwise until

elevation dial reading is 10 mils greater than locked-on reading.

ELEVATION ERROR meter should read between 6 and 14 divisions right.

Return elevation handwheel to locked-on coordinate.

Turn elevation MAN-AID-AUTO switch to AUTO.

d. *Collimation Check.*

(1) Place the following switches in the positions indicated:

(*a*) TEST switch to TEST.

(*b*) RECEIVER switch (missile test panel) to MISSILE.

(*c*) TARGET-STANDBY MISSILE switch to MISSILE.

(2) Repeat (2) through (9), paragraph 187*d*.

(3) Turn rf test set MISSILE-STANDBY-TARGET switch to STANDBY.

(4) Turn all MAN-AID-AUTO switches to MAN.

e. *Noise Balance Check.*

Operate test panel MISSILE-TARGET switch to TARGET.

Operate range SLEW switch until only noise is seen in range notch on range indicator.

Check that COAST light is on.

Turn azimuth MAN-AID-AUTO switch to AUTO.

If azimuth dials rotate steadily in one direction, stop this motion by adjustment of azimuth angle error detector LIMIT LEVEL control.

Turn azimuth MAN-AID-AUTO switch to MAN.

Turn elevation MAN-AID-AUTO switch to MAN.

If elevation dials rotate steadily in one direction, stop this motion by adjustment of the elevation angle error detector LIMIT LEVEL control.

Turn elevation MAN-AID-AUTO switch to MAN.

Turn range MAN-AID-AUTO switch to AUTO.

If range dials rotate steadily in one direction, stop this motion by adjusting the range error detector RANGE BAL 2 control.

Turn range MAN-AID-AUTO switch to MAN.

g. *SYNCH Command System Check.* Complete this check if time permits. If not, proceed with prepare for action.

Turn MISSILE-TARGET switch to MISSILE.

Hold INTLK OVERRIDE switch and open upper door of missile console.

Reset interlock.

Turn ON-OFF switch on command calibrator to ON.

Acquire the test responder.

Establish telephone communication from missile console to launching control trailer.

Turn FUNCTION switch on command calibrator to following positions and verify that corresponding orders are received at launching control trailer:

| | |
|---|---|
| BURST | OG PITCH |
| OG YAW | −5G PITCH |
| −5G YAW | −5G PITCH |
| +5G YAW | |

Turn FUNCTION switch to SYSTEM NORMAL AND ON-OFF switch to OFF.

h. *Prepare for Action.*

Turn MISSILE-TARGET switch on test panel to MISSILE.

Turn COAST-DISABLE switch to down position.

Turn TEST-OPERATE switch to OPERATE.

Check EQUIPMENT EXHAUST temperature and adjust the equipment ventilation controls if necessary.

## 189. Emergency Checks and Adjustment Procedures Checklist

*a. Acquisition Radar.*

| Item | Initials | Frequency of checks after initial check | |
|---|---|---|---|
| | | Continuous power | Cold start |
| Ventilation control | | Every 4 hours | Every hour for the first 4 hours. |
| 0 C to 120 volts | | Hourly | Hourly. |
| Main power on | | | |
| Acquisition power on | | | |
| Plate volts on | | Continuous | Continuous. |
| DC volts check | | Every 2 hours | Every 2 hours. |
| AZ RPM | | Every 2 hours | Continuous. |
| PPI presentation | | Every 4 hours | Continuous. |
| Elevation scan | | Every 4 hours | |
| Magnetron frequency | | | |
| HV ON | | 15 minutes every 4 hours | Continuous. |
| Event recorder | | Every 4 hours | |

*b. Computer.*

| Item | Initials | Frequency of checks after initial check | |
|---|---|---|---|
| | | Continuous power | Cold start |
| Computer condition switch to PRELAUNCH AND INITIAL TURN position. | | The computer condition switch will be left in standby until engagement is imminent except during tests or checks. | Whenever rechecks are made. |
| Plotting boards standby | | The computer condition switch will be left in standby until engagement is imminent except during tests or rechecks. | Whenever checks are made. |
| Computer power ON | | Continuous | Continuous. |
| Plate volts ON | | Continuous | Continuous. |
| DC volts check | | Every 4 hours | Every 2 hours. |
| Amplifier balance (zero check) | | Every 4 hours | |
| Prelaunch static tests | | Every 4 hours | If time permits, check with problems 2, 4, 6, and 8 after completion of all initial checks. |
| Initial turn static tests | | Every 4 hours | If time permits, check problems 1, 2, 6, and 7 after completion of all initial checks. |
| Steering static tests | | Every 4 hours | If time permits, check problems 1, 3, 5, and 7 after completion of all initial checks. |
| Plotting board check | | Every 4 hours | To be completed if time permits. |
| Preaction check | | Recheck whenever engagement is imminent. | Recheck after completion of additional static checks and prior to engagement. |

*c. Target-Tracking Radar.*

| Item | Initials | Frequency of checks after initial check | |
|---|---|---|---|
| | | Continuous power | Cold start |
| Equipment ventilation check | | Every 4 hours | Every hour for the first 4 hours. |
| 0 C to 120 volts | | Hourly | Immediately after the equipment is fully energized and each time range zero is checked. |
| Main power ON | | Continuous | Continuous. |
| Missile and target radar power ON. | | Continuous | Continuous. |
| Missile and target radar low plate volts ON | | Continuous | Continuous. |
| DC volts check | | Every 2 hours | Every 2 hours. |
| Target IND HV ON | | Continuous | Continuous. |
| Missile IND HV ON | | Continuous | Continuous. |
| Preliminary tracking radar checks | | | Whenever checks are to be repeated. |
| Target magnetron frequency | | Check when engagement is imminent. | Check when engagement is imminent. |
| Missile magnetron frequency | | | |
| Target radar HV ON | | 15 minutes every 3 hours | Continuous. |
| Missile radar HV ON | | 15 minutes every 2 hours | Continuous. |
| 1. Warm up checks | | | |
| 2. AGC sum zero | | Every 2 hours | Time permitting, recheck after completion of all initial checks and then at 30-minute intervals. |
| 5. Angle sensitivity check | | Every 2 hours | Time permitting, recheck 30 minutes after completion of initial check and then every 2 hours. |
| 6. Collimation check | | Every 4 hours | Time permitting, recheck every 30 minutes for the first hour then every 2 hours. |
| 4. Noise balance check | | Every 4 hours | Same as above. |
| 3. Range zero | | Every 2 hours and whenever engagement is imminent. | With modified range system, check at 30-minute intervals for the first 2 hours and then every hour for the next 2 hours. With the unmodified range system, check every 15 minutes for the first 2 hours and then every 30 minutes for the next 2 hours. Time permitting, check before engagement. |
| 7. Prepare for action check | | Whenever engagement is imminent. | After completion of rechecks and prior to engagement. |

*d. Missile-Tracking Radar.*

| Item | Initials | Frequency of checks after initial check: Continuous power | Frequency of checks after initial check: Cold start |
|---|---|---|---|
| Missile-tracking radar preliminary checks. | | Every 2 hours | Whenever checks are to be repeated. |
| DC volts check | | Every 2 hours | Every 2 hours. |
| 1. Warmup interval checks | | | |
| 2. AGC sum zero | | Every 2 hours | Time permitting, recheck after completion of all initial checks and then every 30 minutes. |
| 3. Angle sensitivity check | | Every 2 hours | Time permitting, recheck 30 minutes after completion of initial check and then every 2 hours. |
| 4. Collimation check | | Every 4 hours | Time permitting, recheck every 30 minutes for the first hour, and then every 2 hours. |
| 5. Noise balance check | | Every 4 hours | Same as above. |
| 6. Range zero | | Every 2 hours and whenever an engagement is imminent. | With a modified range system, check at 30-minute intervals for the first 2 hours, then every hour for the next 2 hours. With an unmodified range system, check every 15 minutes for the first 2 hours, then every 30 minutes for the next 2 hours. |
| Code spacing check | | Every 2 hours | Same as above. |
| 7. Synch command check | | | Time permitting, this check should be made after completion of all emergency checks. |
| 8. Prepare for action check | | Whenever an engagement is imminent. | After completion of rechecks and prior to engagement. |

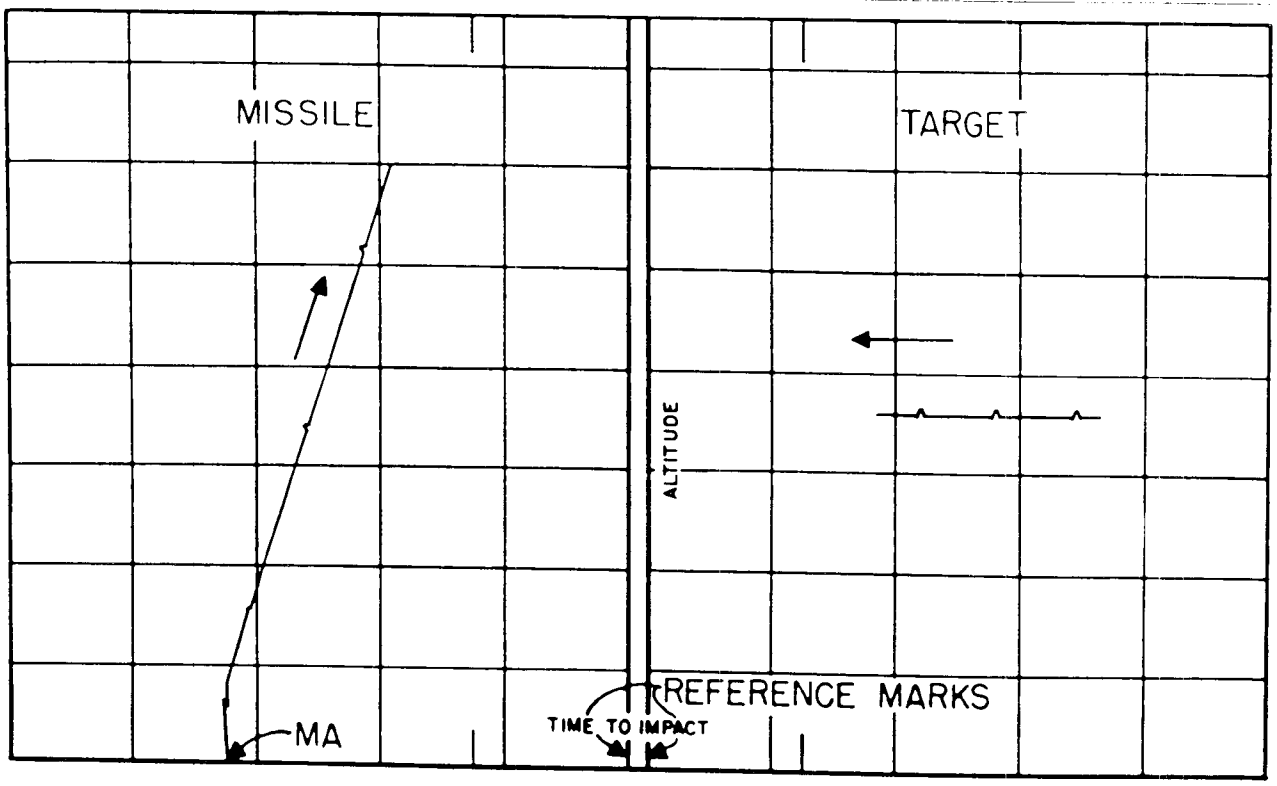


*Figure 145. Plotting boards, course 1.*

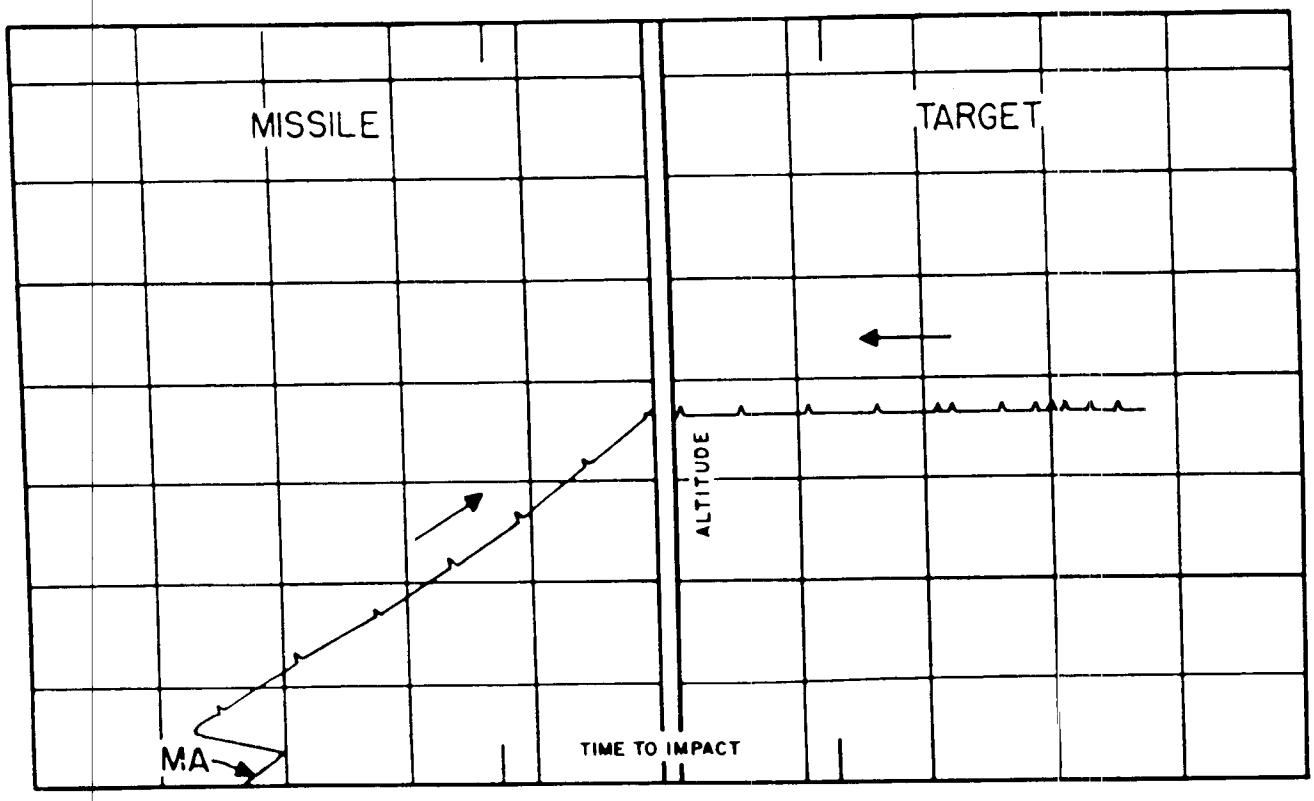


*Figure 146. Plotting boards, course 2.*

## Section VII. COMPUTER DYNAMIC TEST

### 190. Purpose

The computer dynamic test is designed to supplement the static tests given in the acquisition and computer log sheets. The test, consisting of two parts, courses 1 and 2, checks the functioning of the following circuits not checked in the static tests:

*a.* Signaling.
*b.* 4-second delay timer (target-tracked to ready-to-fire).
*c.* Missile away.
*d.* 4.5-second delay timer (missile away to roll stabilization).
*e.* Dead time unit.
*f.* Time servo second-per-second.
*g.* On-trajectory.
*h.* Order limiting.
*i.* Burst order.

### 191. Test Theory

The computer is supplied with target position data by positioning the target-tracking radar at a specified azimuth, elevation, and range. The missile-tracking radar is set to a specified azimuth and elevation and initially at 0 yards in range. The fire order is then given by operating the FIRE switch in the battery control trailer to FIRE. At that time, to simulate the flight of the missile, the missile-tracking radar operator changes from manual tracking to aided tracking, and sets in a uniform tracking rate. In the first part (course 1), the missile radar operator remains in aided tracking at a uniform tracking rate until the missile range reaches 20,000 yards, at which time he changes back to manual operation. This in effect causes the missile flight path to be practically straight up since the initial 7G dive command is not given. Therefore, the ON-TRAJECTORY and BURST circuits are not checked in this part of the test. Course 2 is then run. This is the same as course 1 described above except that the missile radar operator allows the missile range to increase past the time the burst light comes on. Course 2 will therefore check the operation of the ON-TRAJECTORY and BURST circuits. Figures 145 and 146, show sample vertical and horizontal plots from the plotting boards. Figures 147 and 148 show sample event recorder records for both courses. During the conduct of the test, the testing personnel make certain readings and deter-

mine specified time intervals as shown in the checklist, paragraph 198. The checklist should be completed as the test is run. See TM 9–5000–16 for interpreting the event recorder and plotting board records.

## 192. Personnel

*a.* The following stations will be manned during the test:

(1) Missile-tracking console.
(2) Target-tracking console.
(3) Computer.
(4) Battery control console and switchboard.

*b.* The following testing personnel are required. Course 1 need be only run one time if additional personnel are available to make the required readings.

(1) Two in the battery control trailer.
(2) One in the radar control trailer.

## 193. Equipment Preparation

*a.* At the ACQUISITION RADAR CABINET, turn the MAIN POWER to ON.

*b.* At the COMPUTER, turn the COMPUTER POWER, PLATE VOLTS, and SERVO DC switches ON.

*c.* At the RADAR CONTROL TRAILER, turn the MAIN POWER, TARGET POWER, MISSILE POWER, TARGET PLATE VOLTS, and MISSILE PLATE VOLTS to ON. Insure that the magnetron HIGH VOLTAGE is OFF for both tracking radars.

*d.* At the BATTERY CONTROL CONSOLE, make reference marks on clean plotting paper. Then turn the PLOTTING CONDITION switch to OPERATE.

*e.* Turn the event recorder ON.

*f.* At the TARGET-TRACKING CONSOLE, turn the TEST-OPERATE switch to OPERATE, and the three MAN-AID-AUTO switches to MAN. Set the range to 40,000 yards, azimuth to 800 mils, and elevation to 300 mils.

*g.* At the MISSILE-TRACKING CONSOLE, turn the TEST-OPERATE switch to TEST and the three MAN-AID-AUTO switches to MAN. Set the range to 0 yards, azimuth to 800 mils, and the elevation to 1,600 mils.

*h.* At the COMPUTER, set the COMPUTER CONDITION switch to ACTION, operate the DYN TEST switch, set the OL THRESHOLD control to 30,000 feet, the parallax dials to 0, and the gyro azimuth to 400 mils.

## 194. Test, Course 1, Run 1

STEP 1. At the BATTERY CONTROL CONSOLE, depress the FOE pushbutton. Set the DESIGNATE-ABANDON switch to DESIGNATE. At the MISSILE-TRACKING CONSOLE, set the LOCAL DESIGNATE and MISSILE READY switches up. Depress the SECTION A and LAUNCHER 1 pushbuttons.

At the TARGET-TRACKING CONSOLE, momentarily hold the ACQUIRE switch to the ACQUIRE position and then depress the TRACKED pushbutton. If the range and azimuth change when the acquire switch is operated, reposition the radar to 40,000 yards and 800 mils.

STEP 2. With a stopwatch, check the time between the illumination of the TARGET-TRACKED and READY-TO-FIRE indicator lights. The time should be 4.1 plus or minus 0.3 second.

STEP 3. At the BATTERY CONTROL CONSOLE, turn the PLOTTING CONDITION switch to PLOT. Both horizontal plotting board pens should move to 40,000 plus or minus 500 yards and 800 plus or minus 20 mils. The altitude plotting board left pen should be at 0 feet and 62 plus or minus 1 second. The altitude plotting board right pen should be 34,900 plus or minus 1,000 feet and 62 plus or minus 1 second.

With the pen position adjustment potentiometers, move the right pen on the horizontal plotting board approximately one-eighth of an inch to the right to prevent possible pen interchange during the test.

STEP 4. At the BATTERY CONTROL CONSOLE, count down from minus 5 seconds to fire and operate the FIRE switch to FIRE (up).

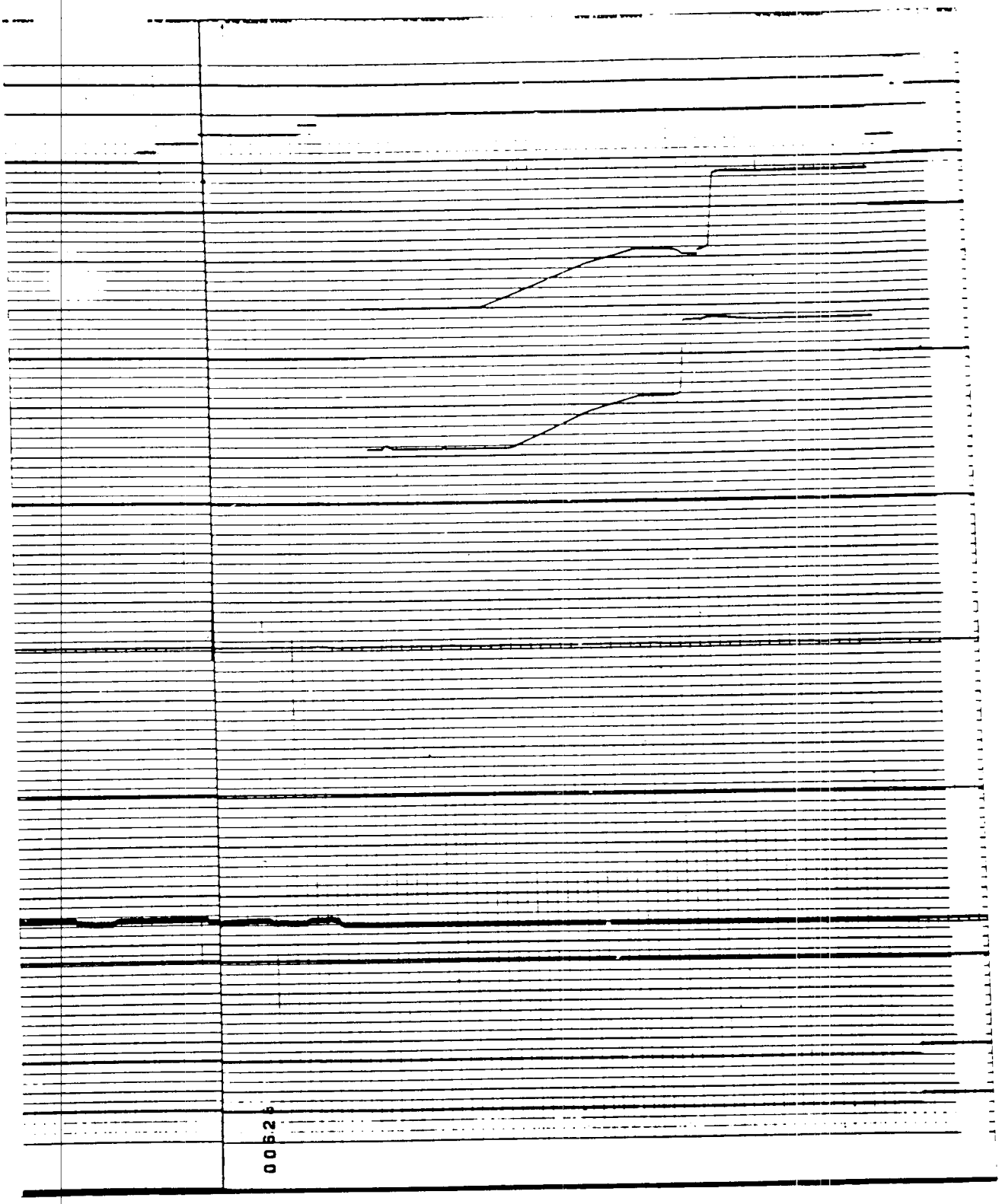


*Figure 147. Event recorder record, course 1.*

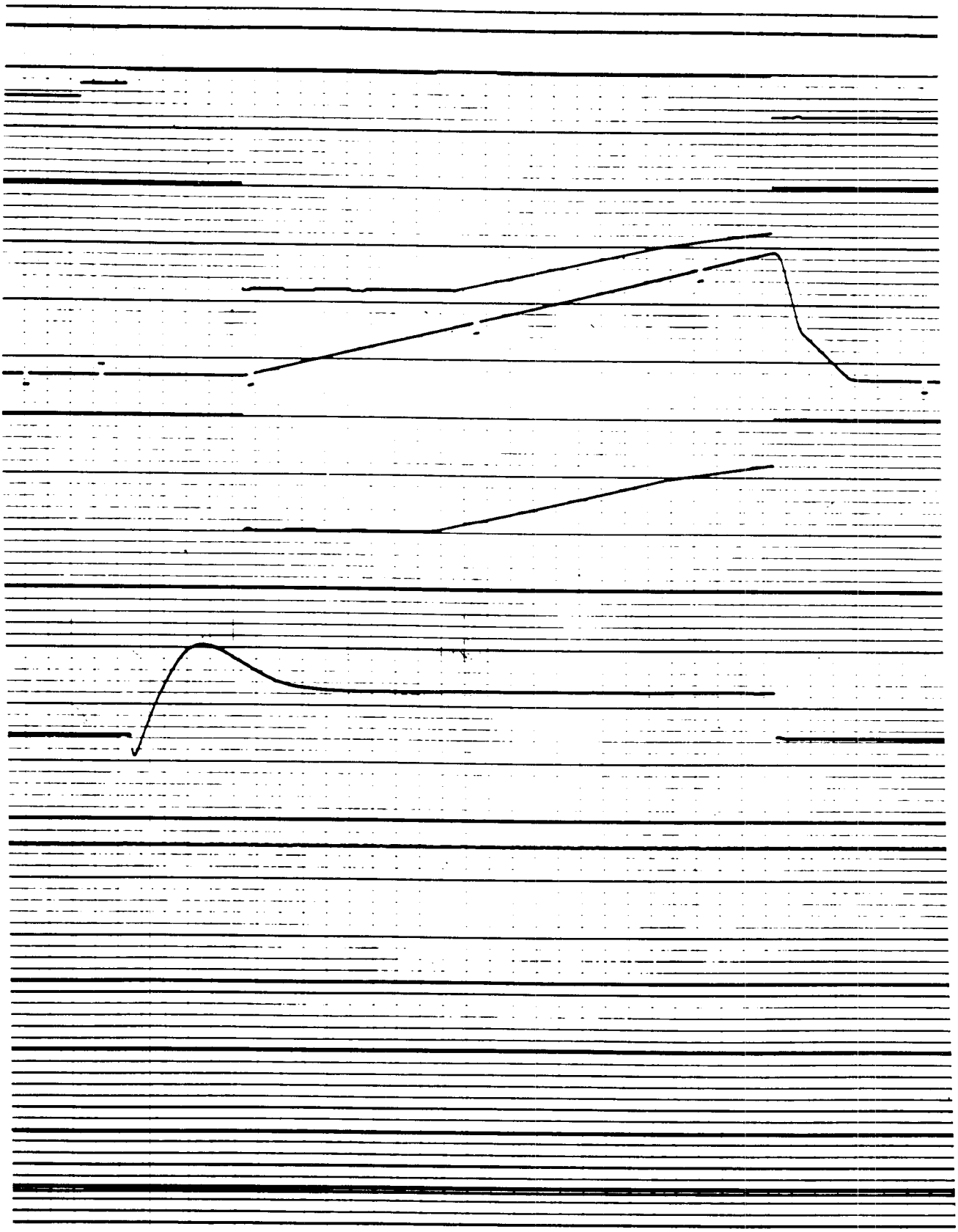

*Figure 147.1. Modified event recorder record, course 1.*

STEP 5. At the MISSILE-TRACKING CONSOLE, when the fire signal is given, turn the range MAN-AID-AUTO switch to AID. Two seconds after the FIRE order is given, turn the range handwheel 6 turns clockwise, at a uniform rate. Take about 3 seconds to complete the 6 turns. Report RANGE RATE IN.

STEP 6. At the COMPUTER, observe that the DEAD TIME unit reads 7 seconds prior to the time the fire order is given. With a stop watch, check the time for the computer DEAD TIME unit to run down from FIRE to 0 seconds. Check that the DEAD TIME unit resets to 7 seconds when the test is completed.

STEP 7. At the BATTERY CONSOLE, observe the altitude plotting boards and the FIN ORDERS meter. When the pen reaches 30,000 feet, order limiting should begin. When the pen reaches 50,000 feet, both meter needles should read minus 2.5g.

STEP 8. When the missile radar range reaches 20,000 yards, operate the range MAN-AID-AUTO switch to MAN at the MISSILE-TRACKING CONSOLE.

STEP 9. At the BATTERY CONTROL CONSOLE, turn the PLOTTING CONDITION switch to

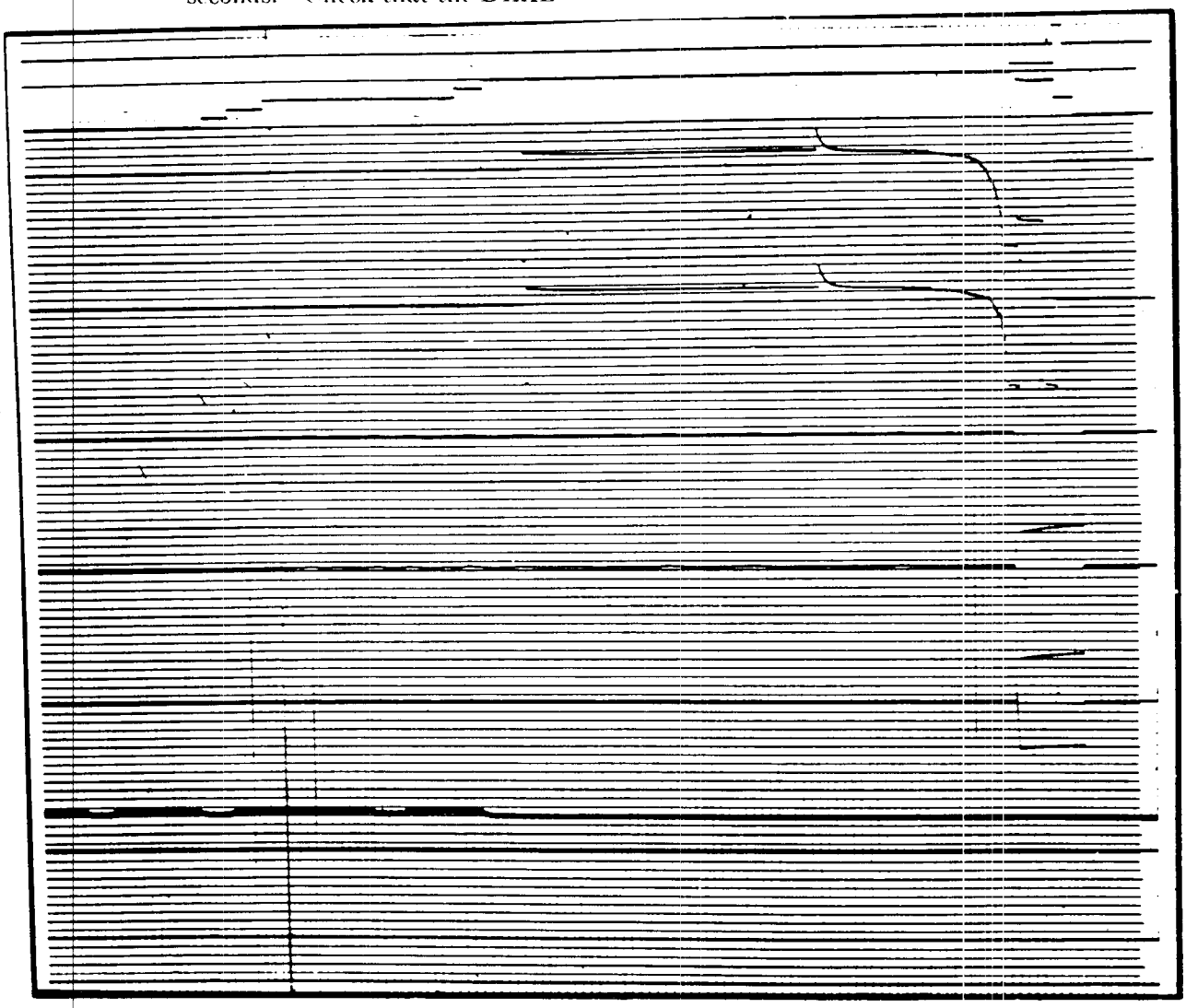

*Figure 148. Event recorder record, course 2.*

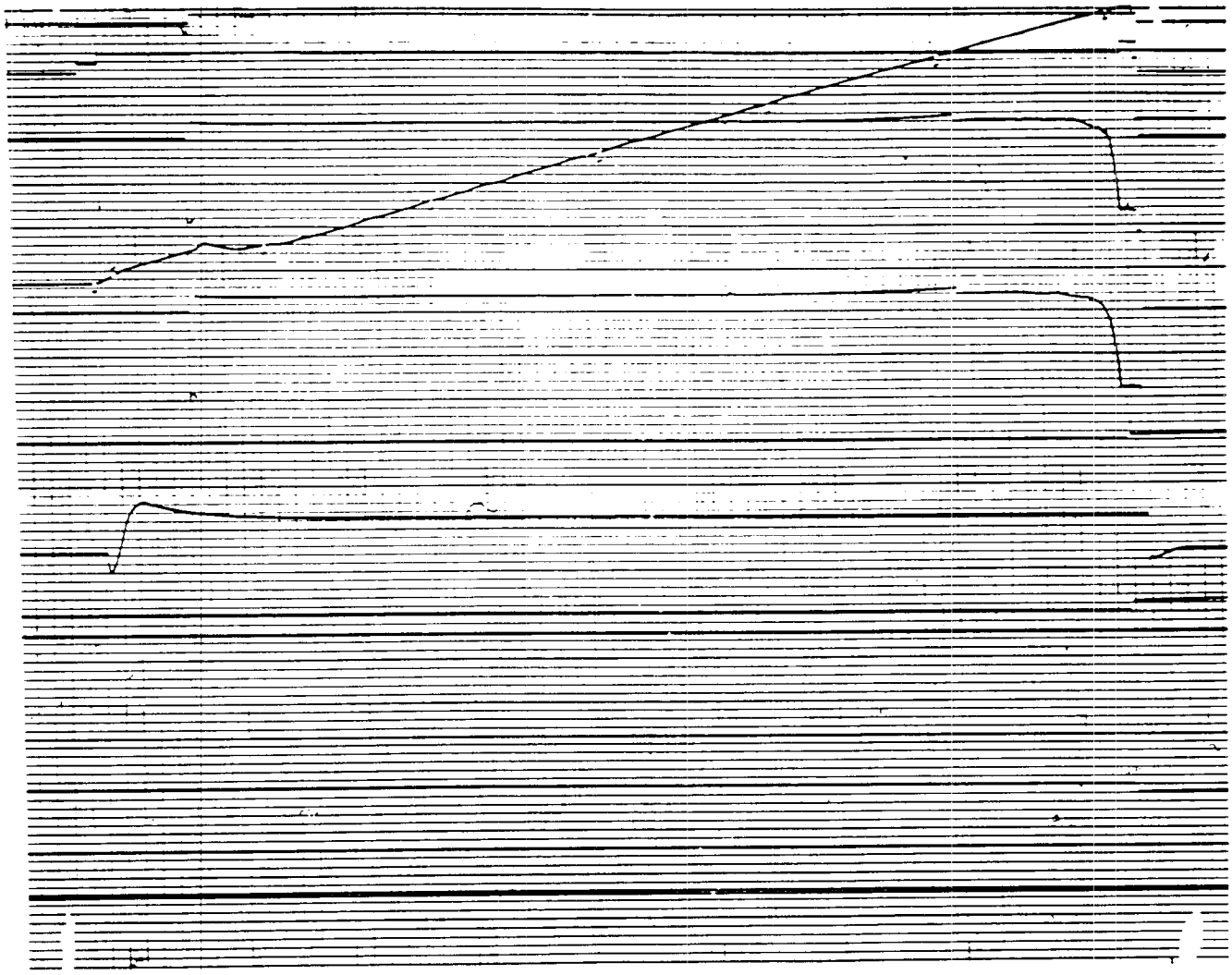

*Figure 148.1. Modified event recorder record, course 2.*

OPERATE, depress the FRIEND pushbutton, and turn the DESIGNATE-ABANDON switch to ABANDON.

## 195. Test, Course 1, Run 2

STEP 1. Repeat step 1, course 1, run 1.

STEP 2. Repeat step 3, course 1, run 1.

STEP 3. Repeat step 4, course 1, run 1.

STEP 4. Repeat step 5, course 1, run 1.

STEP 5. Observe the LAUNCH light in the battery control console. The time between the initiation of the range rate and the illumination of the green LAUNCH indicator light should be approximately 4 seconds.

STEP 6. With a stopwatch check the time for the TIME SERVO to move from 50 to 40 seconds. This time should be 10 plus or minus 0.2 seconds.

STEP 7. Repeat steps 8 and 9, course 1, run 1.

## 196. Test, Course 1, Run 3

STEP 1. Repeat step 1, course 1, run 1.

STEP 2. Repeat step 3, course 1, run 1.

STEP 3. Repeat step 4, course 1, run 1.

STEP 4. Repeat step 5, course 1, run 1.

STEP 5. With a stopwatch, check the time between the illumination of the green LAUNCH indicator light and the instant the TIME SERVO starts to run at a second-

per-second rate. This time should be 4.5 plus or minus 0.2 seconds. This may be checked by determining the time indicated on the event recorder between missile away and the first change in $G_Y$ and $G_p$.

STEP 6. Repeat steps 8 and 9, course 1, run 1.

## 197. Test, Course 2

STEP 1. At the MISSILE-TRACKING CONSOLE, set the elevation to 300 mils.

STEP 2. Repeat step 1, course 1, run 1.

STEP 3. At the BATTERY CONTROL CONSOLE, turn the PLOTTING CONDITION switch to PLOT.

STEP 4. Repeat steps 4 and 5, course 1, run 1.

STEP 5. At the MISSILE-TRACKING CONSOLE, allow the range to increase beyond 40,000 yards until the BURST indicator light comes on.

STEP 6. Check that the TIME SERVO reads approximately zero when the burst light illuminates, and continues for 1 or 2 seconds past zero.

STEP 7. With a multimeter, check that the dc reading between terminal 420 on the RADAR RANGE AND RECEIVER cabinet and ground goes from 250 volts to 40 volts when the BURST light comes on.

STEP 8. At burst, the pens on the altitude plotting board should be at approximately 0 seconds.

The missile pen on the horizontal plotting board should be at 40,000 yards range and 800 mils azimuth. All plots should be normal.

STEP 9. Return the equipment to normal operating condition.

## 198. Computer Dynamic Test Checklist

*a.* Date _____ Battery _____ Serial No. __

*b.* *Course 1, Run 1.*

(1) Time between illumination of TARGET-TRACKED and READY-TO-FIRE indicator lights (4.1 plus or minus 0.3 second) _____ sec.

(2) DEAD-TIME unit reading before fire (7 seconds) _____ sec.

(3) Time between illumination of FIRE indicator light and time DEAD-TIME dial reads 0 (7 plus or minus 0.4 second) _____ sec.

(4) At 30,000 feet, $G_y$ and $G_p$ orders begin to decrease. Verify from event recorder channel 21. (Satisfactory or unsatisfactory) _____

At 50,000 feet, $G_y$ and $G_p$ read minus 2.5g _____ g

*c.* *Course 1, Run 2.*

(1) Time between initiation of range rate and illumination of green LAUNCH indicator light (approximately 4 seconds) _____ sec.

(2) Time between TIME servo reading of 50 and 40 seconds (10 plus or minus 0.2 second) _____ sec

*d.* *Course 1, Run 3.*

Time between illumination of green LAUNCH indicator light and the instant the TIME servo dial starts to run at a second-per-second rate. (4.5 plus or minus 0.2 second) _____ sec.

*e.* *Course 2.*

(1) TIME servo reading when BURST indicator light illuminates (approximately 0), and continues for approximately 1 or 2 seconds below zero _____ sec.

(2) Voltage reading between terminal 420 on RADAR RANGE AND RECEIVER cabinet and ground goes from 250 volts to 40 volts when BURST indicator light illuminates _____ volts

(3) Missile pen on horizontal plotting board at 40,000 yards range and 800 mils azimuth _____

(4) Pens on altitude plotting board at same altitude and approximately 0 seconds at burst.

(5) All plots normal. If not, indicate why.

(6) Event recorder records satisfactory. If not, indicate why.

Testing Officer

## Section VIII. TRAINING AND TRACKING TESTS

### 199. Purpose

The purpose of the tests described in this section is to determine the electrical, electronic, and mechanical condition of the equipment and the state of training of the personnel of a Nike I battery. The tests may be administered by the battalion staff or used by a battery commander to ascertain weakness in crew and equipment performance. Two tests are described—the simultaneous tracking test and the training test. The two tests may be given separately, or as one complete test. They are not intended to replace the daily, weekly, monthly, annual, or prefiring tests, checks, and adjustments, but rather provide a battery commander with an indication of the state of readiness of his equipment and crews.

### 200. Simultaneous Tracking Test

This test determines how accurate the battery control area equipment is adjusted. With the COMPUTER CONDITION switch placed in the TRACKING position, both tracking radars track the same target simultaneously. The target is directed by radio as required by the chief testing officer. The event recorder plots continuously the position differences of the two radars as determined by the computer. By analyzing the event recorder record and the plotting board records, the chief testing officer can determine the accuracy of the operation of the tracking radars. Orientation and synchronization of the radars and the computation of radar-to-radar parallax are also checked.

### 201. Training Test

This test determines the state of training of the personnel of a battery and simultaneously checks portions of the equipment of the system. The battery performs a dry run firing procedure, attempting to make the exercise as realistic as possible. The chief testing officer and his assistants observe the test to evaluate the proficiency of the personnel in the performance of their assigned tasks. Check lists (par. 226) are provided for the testing officers.

### 202. Personnel

*a. Testing Personnel.* The following personnel are required to administer the tests.

(1) One chief testing officer (CTO), who is in charge of the tests.

(2) A minimum of two assistant testing officers to assist in administering the tests. It is recommended that the assistant personnel be trained technicians who are able to detect maintenance and technical adjustment errors as well as operator type errors.

*b. Crew Personnel, Tracking Test.*

(1) The three operators in the battery control trailer.

(2) The battery control switchboard operator who also acts as the timer.

(3) The battery control officer (normally 1 of the 3 operators in the battery control trailer).

(4) The chief of section, tracking section, in the radar control trailer.

(5) The missile-tracking radar operator.

(6) The three target-tracking radar operators.

(7) The generator specialists for the two battery control area generators.

*c. Crew Personnel, Training Test.* This test requires all the personnel necessary to conduct a regular firing mission.

### 203. Preparing for Tests

*a. Planning.* In the early stages of training, all personnel involved should be thoroughly instructed as to how the tests will be conducted, what will be expected of each operator, and how the tests will be scored. It is recommended that sample check-lists be used. The equipment must be warmed up for at least 2 hours prior to starting the tests. Therefore, it is mandatory that the chief testing officer schedule a definite time to administer the tests and that the officer in charge of the battery equipment be advised well in advance the time set aside for testing. The chief testing officer is responsible for obtaining the aircraft required in

the tests and providing the necessary equipment for air-to-ground radio communications. Upon completion of the tests, the event recorder and plotting board records should be immediately turned over to the chief testing officer. Following the analysis of the tests, the chief testing officer should schedule a critique to discuss any weaknesses uncovered by the tests as well as recommendations to correct any deficiencies. The critique should be held as soon as possible after the tests have been concluded if the personnel are to obtain the maximum benefit therefrom. In addition to the critique, the battery commander and battalion staff should be furnished a report in writing setting forth the results of the tests and recommendations for corrective action, if any.

*b. Checklists.* Personnel administering the tests will use the checklists shown below.

*c. Simultaneous Tracking Test Checklist.*

BATTERY _____ SET NUMBER _____ TIME _____ DATE _____

| *Item* | *Standard* | *Initials or reading* |
|---|---|---|
| 1. Computer | Normal actions. All unbalances settled out. | _____ |
| 2. Acquisition radar | Normal. No trouble in acquiring or holding targets. | _____ |
| 3. Orient check of radars from log sheet. | | |
| *a.* X | ±36 yards | _____ yds |
| *b.* Y | ±36 yards | _____ yds |
| *c.* H | ±36 yards | _____ yds |
| 4. Target-tracking radar. | | |
| *a.* ATC | Entered in daily log sheet | _____ |
| *b.* AFC | Entered in daily log sheet | _____ |
| *c.* AGC | Entered in daily log sheet | _____ |
| *d.* Range calibrate and zero | Entered in daily log sheet | _____ |
| *e.* Frequency | At least 200 mc away from specified missile frequency. | _____ mc |
| *f.* Receiver sensitivity | With rf test set. | |
| (1) Sum | Minimum of 24 db | _____ db |
| (2) Azimuth | Minimum of 18 db | _____ db |
| (3) Elevation | Minimum of 18 db | _____ db |
| *g.* Angle sensitivity | With rf test set. | |
| (1) Elevation | 4–6/5 and (12–22)/15 | _____ |
| (2) Azimuth | 4–6/5 and (12–22)/15 | _____ |
| *h.* XTAL current | 0.5 to 1.5 ma | _____ ma |
| *i.* Power output | Maximum of 7 db down | _____ db |
| *j.* Magnetron current | 5 ma | _____ ma |
| *k.* Magnetron voltage | 6.5 to 7.5 KV | _____ KV |
| *l.* Coast light activity | Out or not a continuous rate | _____ |
| *m.* Signal (pip) presentation. | | |
| (1) Elevation | Clear with no loss of target | _____ |
| (2) Azimuth | Clear with no loss of target | _____ |
| (3) Range | Clear with no loss of target | _____ |
| *n.* Error meter activity. | | |
| (1) Elevation | Noticeable slight action | _____ |
| (2) Azimuth | Noticeable slight action | _____ |
| *o.* IF test cables | Out | _____ |
| *p.* TEST switch | TEST position | _____ |
| *q.* DISABLE switch | Down | _____ |
| 5. Missile-tracking radar. | | |
| *a.* ATC | Entered in daily log sheet | _____ |
| *b.* AFC | Entered in daily log sheet | _____ |
| *c.* AGC | Entered in daily log sheet | _____ |

| Item | Standard | Initials or reading | |
|---|---|---|---|
| 5. Missile-tracking radar—Continued | | | |
| *d.* Range calibrate and zero | Entered in daily log sheet | | |
| *e.* Coding and missile response | Entered in daily log sheet | | |
| *f.* Frequency | At least 200 mc away from specified missile- and target-tracking radar frequencies. | | |
| *g.* Receiver sensitivity | With rf test set. | | |
| (1) Sum | Minimum of 24 db | | db |
| (2) Azimuth | Minimum of 18 db | | db |
| (3) Elevation | Minimum of 18 db | | db |
| *h.* Angle sensitivity | With rf test set. | | |
| (1) Elevation | 4-6/5 and (12-22)/15 | | |
| (2) Azimuth | 4-6/5 and (12-22)/15 | | |
| *i.* XTAL current | 0.5 to 1.5 ma | | ma |
| *j.* Power output | Maximum of 4 db down | | db |
| *k.* Magnetron current | 13 ma | | ma |
| *l.* Magnetron voltage | 5.0-6.5 KV | | KV |
| *m.* Coast light activity | Out or not a continuous rate | | |
| *n.* Signal (pip) presentation | Clear with no loss of target | | |
| *o.* Error meter activity. | | | |
| (1) Elevation | Noticeable slight action | | |
| (2) Azimuth | Noticeable slight action | | |
| *p.* IF test cables | Out | | |
| *q.* TEST switch | TEST position | | |
| *r.* DISABLE switch | Down | | |
| *s.* Range unit TEST-NORMAL SWITCH. | TEST | | |
| *t.* Transmitter error | Less than 5 percent | | % |
| 6. Radar-to-radar parallax | Check against survey | | |
| 7. Event recorder tape. | | | |
| *a.* All channels present | All channels on tape | | |
| *b.* Zero-set | All channels zero-set | | |
| *c.* Position difference | Within specified tolerances | | |
| 8. Plotting boards | Normal operation, timing marks proper, no unusual traces or failures. | | |

*d. Training Test Checklist*

1. BATTERY _____ SET NUMBER _____ TIME _____ DATE _____
2. Type of target _____
3. Set ready to fire as prescribed _____
4. Comments on battery drill.
5. Operation of—
   - *a.* Computer _____
   - *b.* TTR _____
   - *c.* Acquisition radar _____
   - *d.* MTR (1) Acquires test responder, yellow alert _____
     - (2) Acquires missile, red alert _____
     - (3) Acquires test responder after mission _____
     - (4) Pip appearance _____
     - (5) Received signal meter reading _____
   - *e.* Launching area procedure _____
6. Computer dynamic check (same as checklist given in par. 198).

7. Event recorder record:

*a.* All channels distinct and correctly zero-set _____

*b.* Ready to fire _____

*c.* Fire order _____

*d.* Launch _____

*e.* On trajectory _____

*f.* Burst order _____

*g.* Missile tracked _____

*h.* Presence of miss distance _____

*i.* Reacquirement of test responder _____

*j.* AGC levels _____

*k.* All other events, not listed above _____

_____

8. Plotting boards:

Plotted events properly, (yes) (no). If no, describe briefly the results _____

The mission is believed to be _____

(Successful), (not successful)

_____

_____

Chief Testing Officer

## 204. Simultaneous Tracking Test Procedure

*a.* The battery control area equipment will be thoroughly warmed up prior to the time designated for the test.

*b.* The normal prefiring tests, checks, and adjustments will be completed prior to the time designated for the test.

*c.* The chief testing officer takes his station in the battery control trailer. After the target is airborne, he directs the fire control officer to PREPARE FOR TRACKING TEST.

*d.* All computer power switches are placed in the ON position. The COMPUTER CONDITION switch is placed initially in STANDBY. Radar-to-radar parallax is set in.

*e.* Displace one horizontal plotting pen approximately one-fourth of an inch. Place the plotting control switch to STANDBY.

*f.* On unmodified systems, to compensate for the missile delay correction, subtract the correct missile delay correction from the target-tracking radar range unit. On modified systems, place the range unit TEST-NORMAL switch to TEST.

*g.* Place the missile-tracking radar in TARGET AFC.

*h.* Direct both tracking radars to lock on and automatically track the target designated by the chief testing officer.

*i.* Cause the green tactical signal lights to be lighted through TARGET TRACKED.

*j.* Place the COMPUTER CONDITION switch to TRACKING.

*k.* Manually displace the time-to-intercept servo to below 0.25 second.

*l.* Place the plotting control switch to OPERATE.

*m.* On the computer control panel, depress the YDS/10 pushbutton and observe the position difference meters. If the differences read are within the limits specified in paragraph 229*a*, proceed with the test. If the readings are not within the tolerances, the difficulty with the system must be found and corrected before proceeding further. Some of these difficulties might be in the orientation and synchronization, range zero, or target position.

*n.* The battery control officer then starts the actual test by commanding START PLOTTING. The target should be not less than 50 mils nor more than 800 mils in elevation. Plotting may be started by placing the ALERT STATUS switch in RED or by placing the ALERT STATUS switch in YELLOW and the event recorder in TEST. Place the plotting control switch in the TEST position at this time. Zero set the event recorder every minute. At the same time the event recorder is zero set, the switchboard operator calls MARK and the computer operator depresses the plotting board PEN LIFT pushbutton. This will make it possible to correlate the plots and event recorder record after the test.

*o.* The chief testing officer directs the target as required. Upon completion of the test, he commands CEASE TRACKING—TEST COMPLETED.

## 205. Training Test Procedure

*a.* The alert conditions in both the battery control and launching control areas will proceed as if the set were being readied for a firing mission.

*b.* The procedure for the training test will follow the normal drill. Then the battery commander will run the computer dynamic test (pars. 190–198). When the dynamic test is completed, return the system to normal operating condition.

## 206. Test Criteria

*a. Tracking Test.*

(1) The data plotted on the event recorder tape and observed on the position difference meters indicates the position difference in $X$, $Y$, and $H$ as determined by the computer from information given by the two tracking radars. In theory the data observed should approximate zero since the radars are tracking the same target and parallax corrections have been made. The chief testing officer must understand, however, that it is impossible to obtain an absolute zero reading and must approach an analysis of the test with logic and an appreciation of the limitations of the equipment.

(2) In general, the average position difference should not exceed a variation of greater than 1 yard per 1,000 yards slant range. The amplitude swings should be greater than 10 yards and less than 50 yards for most targets. The amplitude swings usually will be greater than the limit shown when the target is in a turn, when it is close to the ground, or when target definition is poor. Poor target definition may result from tracking a small target such as an RCAT or an L–19 at extreme range or from tracking an extremely large target such as a B–36 at short range. In making his analysis, the chief testing officer must approach each test as an individual problem, realizing that each system will behave differently from one tracking mission to another.

*b. Training Test.* The training test as prescribed is not designed to check the equipment. Instead, the chief testing officer will concentrate on the performance of duty exhibited by the various members of the crews. The training test checklist should be completed by the test officers on the drill as it is being performed.

# CHAPTER 9
# LAUNCHING AREA

## Section I. LAUNCHING CONTROL TRAILER

### 207. Checks

When the daily, weekly, and monthly checks in the battery control area and the launching sections are made, operation of the launching control trailer will also be checked out, except for the test responder. The procedure for these checks is the same as for a missile (par. 228, steps 9, 10, and 11). The test responder checks, to be performed weekly, are—

*a.* Transmitter power.
*b.* Transmitter frequency.
*c.* Nonresponse to adjacent codes.

## Section II. DAILY CHECKS

### 208. Missile and Booster

| *Check to be performed* | *Satisfactory operating requirements* |
|---|---|
| 1. Missile nose tube closure and motor cover | Closure secure and seated. |
| 2. Arming devices | Safe. |
| 3. Missile covers, screws, and external structure | Proper cover fit, all screws in place and tight. Check for corrosion and dents. |
| 4. Missile support yoke | Yoke tight against locking pin. Hook and latch securely in place in missile. |
| 5. Electrical breakaway | Proper seat of GROUND POWER plug (do not overtighten). |
| 6. Hydraulic disconnect assembly | Plug bottomed, retaining wire tight, lanyard secure and kink-free. |
| 7. Electrical disconnect | Proper connection, rail to launcher or rail to loader test station. |
| 8. Hydraulic lines | Missile hydraulic line connections securely tightened and leak-free. |
| 9. Locking pins and flag stops | Rail locking pins extended, pins seated, flag stops positioned, and pins retracted on loader missiles. |
| 10. Hydraulic, fuel, starting mix, and oxidizer leaks | Self-explanatory. |
| 11. Missile air pressure | 3,000 psi minimum. |
| 12. Propulsion air release assembly and lanyard | Air regulator safety wire and lanyard properly installed and adjusted on each end. |
| 13. Propulsion air safety pin | Air regulator safety pin and safety flag properly installed with safety pin in arming weight and indicator. |
| 14. Booster igniter plugs | Booster shorting plug and warning flag attached. Booster wire attached to igniter. Protective cap on squib receptacle. |
| 15. Booster fins | Properly alined and securely tightened |
| 16. Battery charge | Hold BATTERY TEST switch (LOP) to LOAD for approximately 5 seconds. DC AMMETER should read above 2 amperes. |

### 209. Launcher

| *Check to be performed* | *Satisfactory operating requirements* |
|---|---|
| 1. Hydraulic pack oil level | Check to level mark with BYPASS VALVE open and ERECTING RAIL down. CLOSE BYPASS VALVE AFTER CHECK. |
| 2. Hydraulic pack air pressure | Check air pressure with BYPASS VALVE open (1,000 ± 100 psi on single pack, 2,000 ± 200 psi in combined). |
| 3. General condition of launcher | Check for level, alinement, and general physical condition. |
| 4. Battery charge: voltage | 33.6 ± 0.3 volts. |

| Check to be performed | Satisfactory operating requirements: Position | Color | Number of lights |
|---|---|---|---|
| 5. Verify lights at section panel | Not prepared | Red | 4 |
| | Not ready | Red | 4 |
| | Alert status | White | 1 |
| | On deck | Amber | 1 |
| | Selected | Amber | 1 |
| | Missile-Reject | Green | 1 |
| | Fire | Amber | 1 |
| | Launch order | Amber | 1 |
| | Missile away | Amber | 1 |
| | Launcher Designate | Red | 1 |
| 6. Preventive maintenance performed as prescribed in in TM 9-5000-35. | As prescribed. | | |

## Section III. WEEKLY CHECKS

### 210. General Preparation for Weekly Check

*a.* Check to insure that all switches are positioned as indicated.

| Location | Switch | Positioned to— | No. of switches |
|---|---|---|---|
| (1) LOP | Test-Fire | Fire | 1 |
| | Missile Selector | Lchr | 1 |
| | Heaters and Gyros | Off | 1 |
| | Vibrator | Off | 1 |
| | Cage-Uncage | Cage | 1 |
| | Internal-External | External | 1 |
| | Launcher DC Power | Off | 1 |
| | Missile Heat | Off | 1 |
| | Booster Heat | Off | 1 |
| | Missile Hydraulics | Off | 1 |
| | Launcher Up-Down | Stop | 1 |
| | Panel Lights | Off | 1 |
| (2) Section Control Panel | Intercom | Off | 4 |
| | Launcher Power | Off | 4 |
| | Heaters and Gyros | Off | 4 |
| | Launcher Elevation | Off | 4 |
| | Hydraulics | Off | 4 |
| | Launcher Selector | None | 1 |
| | Section Ready to Fire | Not Ready | 1 |
| | Power On-Off | Off | 1 |
| | Panel Lights | Off | 1 |
| | Gyro Preset Manual-Auto | Auto | 1 |
| | Alert Selector | Auto | 1 |
| | On Deck | Off | 1 |
| | Selected | Off | 1 |
| | Fire | Off | 1 |
| | Launch Order | Off | 1 |
| (3) Launching Control Trailer Console. | Power On-Off | Off | 1 |
| | Ready to Fire | Not Ready | 1 |
| | Alert Selector | Auto | 1 |
| | Fire | Off | 1 |
| | Launch Order | Off | 1 |
| | Section Selector | None | 1 |
| | Filament | Off | 1 |
| | On Deck | Off | 4 |

*b.* VOLTAGE CONTROL switch at launcher section generator to REMOTE position, and voltage at section power cabinet set to 208±10 volts at 400±20 cycles per second.

*c.* Turn section operating cabinet POWER switch to ON. Check that blower operates and that blower doors are open.

*d.* Turn MAIN POWER switch in launcher J-box ON.

*e.* Position HYDRAULIC SELECTOR valve on loading rack to LAUNCHER.

*f.* Close HYDRAULIC SHUT-OFF valves at all test stations.

*g.* Position four ready rounds on the launchers (one ready round on each launcher) and make the proper hydraulic and electrical connections.

## 211. Preparation for Missile Checks Using MTR

*a.* In addition to the general preparations, provisions must be made to operate the LOP, Section, LCT, and battery control trailer console on the TECH LOOP. Use section station 2 and LCT console station 2 with a switchboard jumper to TECH LOOP. (Until SECTION SELECTED it will be necessary to use switchboard pitching on all phone stations.) For underground installations the operator observing missile fin response will monitor the phone at LOP number 4.

*b.* Turn LCT CONSOLE POWER switch ON.

*c.* Turn section LAUNCHER POWER switch ON. Insure that all arming devices are on SAFE and that all booster squibs NOT connected. Check that launcher J-box blower is operating.

## 212. Weekly Missile Checks Using Missile-Tracking Radar

*Note.* Preparations for performance of this weekly check to be performed after completion of daily checks.

| *Check to be performed* | *Satisfactory operating requirements* |
|---|---|
| 1. (SECTION) MISSILE PREPARED switch for appropriate launcher turned ON. | MISSILE PREPARED green light at section. An indication of one missile prepared at LCT. |
| 2. (SECTION) CREW SAFETY keys to FIRE | Amber READY lamp is lighted. |
| 3. (SECTION) LAUNCHER ELEVATION switch to UP. | Erecting arm elevates. |
| 4. (SECTION) HEATERS AND GYROS switch ON | Green missile READY TO FIRE lamp at section is lighted. |
| 5. (SECTION) DESIGNATE launcher | LAUNCHER DESIGNATE light at section green. SECTION READY light at LCT green. |
| 6. (SECTION) Section READY TO FIRE switch to READY TO FIRE. | READY TO FIRE light at LCT green. |
| 7. (LCT) Request YELLOW, BLUE, AND RED status from battery control. | BUZZER (at yellow status), status lights change at section. SIREN (at yellow status), status lights change at LCT. |
| 8. (LCT) SELECT the appropriate section | SECTION SELECTED light at section green. LAUNCHER DESIGNATED light at LCT green. |
| 9. (LCT) READY TO FIRE SWITCH READY | MISSILE READY light at LCT green. |
| 10. (SECTION) HYDRAULICS switch ON | |
| 11. Missile-tracking radar command signals: | Reported missile fin response from LOP to MTR: |
| *a.* +5G PITCH | +5G PITCH, HOLDING STEADY. |
| *b.* −5G PITCH | −5G PITCH, HOLDING STEADY. |
| *c.* OG PITCH | OG PITCH, HOLDING STEADY. |
| *d.* +5G YAW | +5G YAW, HOLDING STEADY. |
| *e.* −5G YAW | −5G YAW, HOLDING STEADY. |
| *f.* OG YAW | OG YAW, HOLDING STEADY. |

12. After completion of test on all launchers return to conditions in step *a* of general preparation for weekly check (par. 210) or proceed immediately to Automatic Fire Command Check (pars. 213 and 214).

## 213. Preparation for Automatic Fire Command Test

*a.* Complete steps *a* through *g* of general preparation for weekly checks (par. 210).

*b.* Complete steps *b* and *c* of preparations for missile checks using MTR (par. 211).

*c.* Complete steps 1 through 10 of missile checks using missile-tracking radar (par. 212).

*d.* Connect a multimeter or other ac voltage indicator to the squib receptacle of the launcher under test.

## 214. Weekly Checks, Automatic Fire Command Test

| *Check to be performed* | *Requirement for satisfactory operation* |
|---|---|
| 1. (LCT) Request battery control to give countdown to transmission of FIRE COMMAND. | Green FIRE light and BUZZER at LCT. Green FIRE light and BUZZER at section. Section notifies launcher over intercom system at FIRE command. |

| *Check to be performed* | *Requirement for satisfactory operation* |
|---|---|
| 2. LAUNCH ORDER (approximately 2 seconds after FIRE COMMAND). | Green LAUNCH light and stop of BUZZER at section. Green LAUNCH light and stop of BUZZER at LCT. Read 120 volts (approximately) on AC METER at launcher squib. |
| 3. MISSILE REJECT (5 seconds after FIRE COMMAND). | Red REJECT light at LCT. Red REJECT light at section. |

4. After completion of test on all launchers return to conditions in STEP 1 of general preparation for weekly check, or proceed immediately to check of automatic $A_G$ transmission (pars. 215 and 216).

## 215. Preparation for Check of Automatic $A_G$ Transmission

*a. LCT.*
- (1) Power ON.
- (2) SECTION SELECTED.
- (3) Phone circuit connecting section, LCT, and battery control.

*b. Section.*
- (1) Power ON.
- (2) SECTION SELECTED.
- (3) GYRO PRESET switch in AUTO.
- (4) LAUNCHER DESIGNATED.
- (5) LAUNCHER ORIENT RESOLVERS set at proper launcher heading. (The heading is set on instructions from the battery control trailer.)
- (6) Section power cabinet door open with interlock switch pulled out to energize the power circuits.

*c. Launcher.* One round on each launcher.

## 216. Check of Automatic $A_G$ Transmission

| *$A_G$ transmission from battery control trailer* | *From section data* |
|---|---|
| *a.* 0 mils | Record $A_G$—$A_L$. |
| *b.* 1, 600 mils | Record $A_G$—$A_L$. |
| *c.* 3, 200 mils | Record $A_G$—$A_L$. |
| *d.* 4, 800 mils | Record $A_G$—$A_L$. |

## 217. $A_G$ System Manual Check

| *Check to be performed* | *Satisfactory operating requirements* |
|---|---|
| 1. +20 volt balance | Gyro preset meter reads 0. |
| 2. +250 volt balance | Gyro preset meter reads 0. |
| 3. GYRO PRESET switch to MANUAL | |
| 4. DESIGNATE LAUNCHER | |
| 5. Rotate MANUAL RESOLVER with sufficient speed to cause momentary deflection of SLEW METER. | SLEW METER returns to ZERO. |
| 6. Set MANUAL RESOLVER to 1,600, 3,200, 4,800, and 0 mils. | SLEW METER settles to ZERO for each setting. Data converter reads $A_G$ and $A_L$. |

7. Return section and LCT to STANDBY condition after completion of test on all launchers.

## 218. LOP Test for all Ready Missiles

(Three days separation from MTR check)

| *Check to be performed* | *Satisfactory operating requirements* |
|---|---|
| 1. Connect hydraulic lines between transporting rail and test stations and launcher. Position MISSILE HYDRAULIC pressure selector valve to LOADER. Open hydraulic shut-off valve at test station of missile to be checked. | |
| 2. Check condition of both arming devices visually to insure that they are in SAFE position. | SAFE. |
| 3. Position TEST-FIRE switch to TEST | |

| *Check to be performed* | *Satisfactory operating requirements* |
|---|---|
| 4. Position test station switch to TEST for missile being tested. Check to see that LAUNCHER DC POWER switch is ON. | Voltage indication should be obtained on voltmeter and blower in launcher junction box should be operating. |
| 5. Turn HEATERS AND GYROS switch to ON | LOP ammeter reads approximately 4 amperes after initial surge. |
| 6. Turn VIBRATOR switch ON | After 60-second time delay, vibrator power is applied to the guidance unit. Ammeter increases to approximately 9 amperes. |
| 7. Position MISSILE HYDRAULICS switch to MISSILE HYDRAULICS. | Hydraulic power unit will start and operate at 1,900 (±100) psi on separate power packs; 2,000 (±200) psi for combined power packs.<br>*Note.* For underground launcher, number 2 LOP controls missile hydraulics for all test stations on that side of the elevator. |
| 8. On talk-back speaker instruct operator to designate launcher. | Designate launcher. |
| 9. Position INTERNAL-EXTERNAL switch to INTERNAL. | Ammeter indicates zero. Voltmeter indicates missile battery voltage (minimum 27 volts). |
| 10. Momentarily depress COMMAND TEST-ROLL pushbutton. | Missile control surfaces will respond to clockwise roll and return to neutral. |
| 11. Momentarily depress COMMAND TEST-YAW pushbutton. | Missile control surfaces will respond for right climb (+5G) and return to approx −7° (approx 1 inch from scribe mark). |
| 12. Momentarily depress COMMAND TEST-PITCH pushbutton. | Missile control surfaces will respond for left climb (+5G) and return to approximately −7° (approx 1 inch from scribe mark). |
| 13. Check voltmeter | Minimum reading 27 volts. |
| 14. Position INTERNAL-EXTERNAL switch to EXTERNAL. | Ammeter will read approximately 9 amperes. |
| 15. Position CAGE-UNCAGE switch to UNCAGE. Using talkback speaker, instruct section operator to depress SLEW switch. | Note that ailerons do not respond. |
| 16. Position CAGE-UNCAGE switch to CAGE. Instruct section operator to depress SLEW switch. | Note that ailerons respond with smooth, continuous movement to CW and CCW roll positions. |
| 17. Position MISSILE HYDRAULICS switch to OFF, VIBRATOR switch to OFF, and HEATERS AND GYROS switch to OFF. Check INTERNAL-EXTERNAL switch for EXTERNAL. | |
| 18. Momentarily position BATTERY TEST-CHARGE switch to CHARGE. | Ammeter will read above 2, indicating that battery charge current is being supplied to missile. |

19. After missiles have been tested, position all switches on LOP to their OFF or NORMAL positions. Close LOP cover.

## 219. Preventive Maintenance (Launcher)

Preventive maintenance performed as prescribed in TM 9-5000-35.

## 220. Booster Igniter Circuit Tests

*Note.* With power switch on, turn on launcher power for the launcher being tested

| *Check to be performed* | *Satisfactory operating requirements* |
|---|---|
| 1. BOOSTER WIRING TEST WITH 8020714 TESTER | |
| *a.* Depress METER TEST button on tester for 30 seconds. | Note that meter indicates full scale ±5% at end of time. |
| *b.* Disconnect booster igniter and connect BOOSTER harness on tester to male plug on booster head. | |
| *c.* Switch selector to BOOSTER CONT. | Ascertain that meter deflects to approximate position as in *a* above. |
| *d.* Remove shorting plug at nozzle end of booster. Check meter reading, replace shorting plug. Disconnect BOOSTER harness on tester from booster and reconnect booster wires to igniter. | Observe meter reading (needle at left index.) |

| *Check to be performed* | *Satisfactory operating requirements* |
|---|---|
| 2. BOOSTER WIRING TEST WITH 8160961 TESTER. | Note that meter indicates full scale ±5% at end of time. |
| *a.* Switch selector switch on tester to BOOSTER CONT. Depress CONTINUITY button for 30 seconds. | |
| *b.* Disconnect booster igniter and connect BOOSTER harness on the tester to male plug on booster head. | |
| *c.* Depress CONTINUITY button | Check for zero reading of meter (needle at left index). |
| *d.* Remove shorting plug at nozzle end of booster and check that meter deflects to approximate position as obtained in 2*a* above. Replace shorting plug. Disconnect BOOSTER harness on tester from booster and reconnect booster wires to igniter. | Meter indicates full scale ±5% |
| 3. LAUNCHER STRAY VOLTAGE CHECK USING 8020714 TESTER. | |
| *a.* Connect tester to squib receptacle on launcher. | |
| *b.* Switch selector LAUNCHER CONT | Note that meter reads 1 ohm or less. |
| *c.* Switch selector to LAUNCHER AC | Check that meter indicates less than 3 scale divisions on 0–25 scale. |
| *d.* Remove shorting plug at nozzle end of booster and check meter. Replace shorting plug. Disconnect BOOSTER harness on tester from booster and reconnect booster wires to igniter. | Observe that meter deflects to approximate full scale ±5%. |
| 4. LAUNCHER STRAY VOLTAGE CHECK USING 8160961 TESTER. | |
| *a.* Connect tester to squib receptacle on launcher. | |
| *b.* Position the selector switch to LAUNCHER CONT and depress the CONTINUITY push button. | Check that meter reads 0.05 or less. |
| *c.* With SENSITIVITY switch positioned initially at LOW and then at MED and the selector switch to LAUNCHER AC, check meter indication. | Indicates 0.75 or less. |
| *d.* Position selector switch to LAUNCHER DC and repeat 4*b* above. | Check that meter reads 0.05 or less. If needle deflects to the left or negative side, disconnect, rotate 180° and reconnect LAUNCHER harness. |
| *e.* Verify that meter has not been damaged by pressing METER TEST button. | Check for full scale reading ±5% within 30 seconds. |
| 5. REPEAT. | |
| Repeat checks 1 and 2 or 3 and 4 above for each launcher and ready round in the battery. | |

## 221. Underground Launcher Elevator Operational Checks

| *Check to be performed* | *Satisfactory operating requirements* |
|---|---|
| 1. MANUAL OPERATION (FROM MASTER CONTROL). | |
| *a.* Depress DOORS OPEN switch | Doors open (5 seconds after warning gong). |
| *b.* Depress ELEVATOR UP switch | (1) Elevator starts up.<br>(2) Slowdown switch kicks in (elevator slows).<br>(3) Elevator reaches up limit.<br>(4) Locking bars engage.<br>(5) Elevator settles on locking bars.<br>(6) Locking bars indication lamps are lighted. |
| *c.* Depress ELEVATOR DOWN switch | (1) Elevator lifts clear of locking bars.<br>(2) Locking bars retract.<br>(3) Slowdown switch kicks in (approximately floor level).<br>(4) Lower limit stop.<br>(5) Locking bars indication lights off. |
| *d.* Depress DOORS CLOSE switch | Doors close. |

| *Check to be performed* | *Satisfactory operating requirements* |
|---|---|
| 2. MANUAL OPERATION (FROM ELEVATOR). | |
| *a.* Open elevator doors | |
| *b.* Place MASTER CONTROL switch to ELEVATOR. | |
| *c.* Depress elevator control UP switch | (1) Elevator starts up.<br>(2) Slowdown switch kicks in.<br>(3) Elevator reaches up limit.<br>(4) Locking bars engage.<br>(5) Elevator settles on locking bars.<br>(6) Locking bars indication lamps are lighted. |
| *d.* Depress elevator control DOWN switch | (1) Elevator lifts clear of locking bars.<br>(2) Elevator locking bars retract.<br>(3) Slowdown switch kicks in.<br>(4) Lower limit stop.<br>(5) Locking bars indication light off. |
| *e.* Close doors | |
| 3. AUTOMATIC OPERATION (FROM LOP). | |
| *a.* Place LOP TEST-FIRE switch to TEST | |
| *b.* Place MASTER CONTROL switch to CONSOLE. | |
| *c.* Push LOP LAUNCHER ELEVATE switch to UP. | (1) Doors open.<br>(2) Elevator begins to rise from intermediate position when doors are fully open. When starting from lower limit, the elevator begins to rise at approximately the same time the doors start to open but cannot rise above floor level until the doors are fully opened.<br>(3) Launcher erecting rail begins to elevate (at floor level).<br>(4) Elevator slow down.<br>(5) Up limit.<br>(6) Locking bars engage.<br>(7) Elevator settles on locking bars.<br>(8) Locking bars engaged indication lights ON. |
| *d.* Push LAUNCHER UP-DOWN switch to DOWN. | (1) Elevator lifts clear of locking bars.<br>(2) Erecting arm begins to lower.<br>(3) Locking bars retract.<br>(4) Slow down (approximately floor level).<br>(5) Doors close.<br>(6) Lower limit elevator stop.<br>(7) Locking bar indication lights off. |
| 4. AUTOMATIC OPERATION FROM SECTION CABINET. | |
| *a.* Place LOP TEST-FIRE switch to FIRE | |
| *b.* Place MASTER CONTROL switch to CONSOLE. | |
| *c.* Using LAUNCHER UP-DOWN switch at SECTION, perform operations as given in 3*c* and *d* above. | |

## 222. Underground Launcher Preventive Maintenance and Lubrication

| *Check to be performed* | *Satisfactory operating requirements* |
|---|---|
| 1. Hydraulic fluid level (with elevator in raised position) | Sufficient reserve for continued operation. |
| 2. Elevator hydraulic lines | No leaks or other indications of faulty plumbing. |
| 3. Equalizing cables | Elevator bed remains level with no binding or dipping of either end as the elevator is raised or lowered. |
| 4. Lubrication | Performed as prescribed in lubrication orders. |

# Section IV. SPECIAL CHECKS

## 223. RF Test Set Calibration

To be performed weekly or prior to all missile checkouts with the rf test set. Instructions in parentheses apply to GS-15636 rf test set only. Allow 15-minute minimum warmup time before calibration.

| *Step* | *Satisfactory operating requirements* |
|---|---|
| 1. Connect ac power cable to 120V, 400~ power source | |
| 2. Connect ac power cable to the 120V, 400~ receptacle on the rear of the rf test set. | |
| 3. AC POWER switch to ON | POWER ON light illuminates and blower operates. |
| 4. TEST SELECTOR switch to RF TEST SIG | |
| 5. PWR METER CAL switch to ADJ V | |
| 6. Adjust CAL V control | RF POWER meter reading of V. |
| 7. Depress RESPONSE −250V switch | |
| 8. Observe RESPONSE OR VOLTAGE meter | |
| 9. Adjust −250V screwdriver adjustment | RESPONSE OR VOLTAGE meter needle points to ADJ VOLTS position. |
| 10. COMMAND CAL switch to BAL. (BRIGHTNESS control fully cw). | |
| 11. Adjust BAL screwdriver adjustment | CAL meter reads to 0 or center position. |
| 12. COMMAND CAL switch to 2000~ (BRIGHTNESS control fully cw.) | Visual indication on oscilloscope. |
| 13. ADJUST 2000~ screwdriver adjustment | Single stationary Lissajous pattern on oscilloscope |
| 14. COMMAND CAL switch to 1600~ | Single stationary Lissajous pattern on oscilloscope. |
| 15. Adjust 1600~ screwdriver adjustment | Single stationary Lissajous pattern on oscilloscope. |
| 16. COMMAND CAL switch to 2400~ | Single stationary Lissajous pattern on oscilloscope. |
| 17. Adjust 2400~ screwdriver adjustment | Single stationary Lissajous pattern on oscilloscope. |
| 18. Repeat 12 through 17 above until a stationary pattern occurs in all of first 3 positions of COMMAND CAL switch. | |
| 19. COMMAND CAL switch to YAW | |
| 20. YAW COMMAND switch to OG | |
| 21. Adjust YAW screwdriver adjustment | CAL meter reads to 0 or center position. Single stationary Lissajous pattern on oscilloscope. |
| 22. COMMAND CAL switch to PITCH | |
| 23. PITCH COMMAND switch to OG | |
| 24. Adjust PITCH screwdriver adjustment | CAL meter reads to 0 or center position. Single stationary Lissajous pattern on oscilloscope. |
| 25. COMMAND CAL switch to BURST | |
| 26. Adjust BURST screwdriver adjustment | CAL meter reads to 0 or center position. Single stationary Lissajous pattern on oscilloscope. |
| 27. COMMAND CAL switch to TIME | |
| 28. TIME-MICROSECONDS dials to nearest full microsecond to missile code interval. | |
| 29. Adjust TIME screwdriver adjustment | Momentary single stationary Lissajous pattern. |
| 30. COMMAND CAL switch to MEAS. (BRIGHTNESS control fully ccw.) | |
| 31. PWR METER CAL switch to ADJ ∞ | |
| 32. Adjust CAL ∞ control | Reading of as nearly close to ∞ as possible on RF POWER METER. |
| 33. PWR METER CAL switch to ADJ 0 | |
| 34. Adjust CAL 0 control | Reading of 0 on RF POWER meter. |
| 35. ATTEN DB control to 20 | RF POWER meter reading falls off. |
| 36. PWR METER CAL SWITCH TO MEAS | |
| 37. TIME-MICROSECOND dials to 0000 | |
| 38. Adjust REPELLER control | Maximum obtainable reading on RF POWER meter. (Use ATTEN DB knob to keep reading on scale.) |
| 39. PWR METER CAL switch to ADJ ∞ | Check that RF POWER meter reads as close to ∞ as possible. |
| 40. PWR METER CAL switch to ADJ 0 | Check that RF POWER meter reads as close to 0 as possible. |
| 41. Adjust MEAS FREQ control | Maximum dip towards ∞ on RF POWER meter. |
| 42. Read MEAS FREQ dial | |

| Step | Satisfactory operating requirements |
|---|---|
| 43. Determined frequency from MEAS FREQ table | Assigned frequency (±50 mc for missiles w/o antenna filters). |
| 44. Rotate MEAS FREQ control 3 turns in either direction. | |
| 45. TIME-MICROSECONDS dials to 0400 | |
| 46. ATTEN DB control to 0 | |
| 47. Adjust OUTPUT control | Reading of 0 on RF POWER meter. |

## 224. Measurement of Rf Test Set Delta (Delay) Time (Recalibrate Rf Power DB meter).

| Step | Satisfactory operating requirements |
|---|---|
| 1. TEST SELECTOR switch to TRANS TEST. (CODE & TRANS TEST.) | |
| 2. TIME-MICROSECONDS dials to code +1μ sec | RF POWER METER reading falls off. |
| 3. Adjust CAL ∞ control | RF POWER meter reads 2. |
| 4. Decrease TIME MICROSECONDS dial readings | RF POWER meter reading of from 2.0 to 1.9. |
| 5. Record setting of TIME MICROSECONDS dials | |
| 6. ADJ CODE knob fully cw | |
| 7. TEST SELECTOR switch to RESP TIME B. (TEST SELECTOR switch to RESP TIME and RESPONSE TIME switch to MISSILE.) | |
| 8. Adjust CAL ∞ control | Reading of 2.0 on RF POWER meter. |
| 9. Rotate ADJ CODE KNOB in CCW direction | RF POWER meter reading of from 2.0 to 1.9. |
| 10. TEST SELECTOR switch to RESP TIME A. (TEST SELECTOR switch to RESP TIME and RESPONSE TIME switch to MISSILE.) | |
| 11. Turn RESPONSE control fully clockwise | |
| 12. Increase TIME-MICROSECONDS dial settings | Maximum reading on RESPONSE OR VOLTAGE meter. Keep reading on scale with RESPONSE control. |
| 13. Record setting of TIME-MICROSECONDS dials | |
| 14. Subtract reading recorded in 5 above from reading recorded in 13 above. | |
| 15. Difference equals Delta (delay) | Delta time= _____μ sec. |

## 225. Missile Rf Test Set Running Time Log Sheet

A time log sheet should be maintained for the hydraulic test stand similar to that shown immediately below.

SHEET No._____

RF TEST SET SERIAL NR._____

Total running time from previous sheet_____Date_____Operator_____

ON_____OF_____TOTAL_____

TOTAL RUNNING TIME:_____hrs_____

# Section V. MONTHLY CHECKS

## 226. Preparation for Missile Electrical Tests in Launching Area

*a.* Check the condition of both arming devices visually to insure that they are in the SAFE position, then, with all power off, make the following cable connection between the test equipment and the missile.

(1) Connect the missile test cable from receptacle J8 on the test control unit to the test receptacle on the missile.

(2) Connect the ac power cable from the 120V, 400 ~ receptacle on the rf test set to receptacle J13A on the launcher electrical junction box.

(3) Connect the switch attenuator control cable from the WAVEGUIDE ASSEMBLY receptacle on the rf test set to connector J12 on the antenna coupler.

(4) Connect the flexible waveguide L-connector to the receptacle on the rear of the rf test set upper drawer. When the guide pins on the flange have been matched to the corresponding holes on the L-connector, turn the waveguide clamp holder until the waveguide is securely connected. Make sure that the longitudinal axis on the test set receptacle matches the longitudinal axis of the flexible waveguide. The flexible waveguide need not be connected to the

antenna coupler until the coupler has been placed on the missile.

(5) Install the antenna coupler on the missile.

(6) Connect burst cable from RF P–15 to J14A on LOP.

*b.* Check that the AC POWER switch on the rf test set is in the OFF position. Check all switches on the LOP and the section control panel to insure that they are in the OFF or normal positions. Verify at the section generator that the VOLTAGE CONTROL switch is in the REMOTE position, and that the voltage is 208 ± 10 volts at the section power cabinet. When an engine driven generator is used, verify that the frequency is 400 ± 20 cycles. Turn the POWER switch on the section operating panel to ON and check that the blower is operating. Turn on the PANEL LIGHT and INTERCOM switches as required and adjust the SIGNAL LIGHT intensity as desired. Connect the hydraulic hoses between the launcher-loader and the launching rail if necessary. Position the MISSILE HYDRAULIC PRESSURE selector valve and the hydraulic shutoff PRESSURE valve as required.

***Caution:*** Unless the checkout is completed within 20 minutes, the missile should be turned off for 5 minutes after the first 20 minutes of operation. After this, the missile should be turned on for 10 minutes and off for 5 minutes until the checkout is completed. If the checkout is not completed after one hour of running time, the missile should be turned off for one-half hour before continuing the checkout. Record the missile running time as specified in the check sheet each time the missile is turned on or off.

*c.* At any point in the procedure, when the gyro is uncaged and power to the missile is to be turned off, the gyro must be caged for at least one minute to allow the caging to complete itself before the HEATERS AND GYROS and LAUNCHER DC POWER switches are turned to the OFF position. In the following tests, all readings on the SERVO meter are made with the METER SENSITIVITY pushbutton depressed. The METER SENSITIVITY pushbutton associated with the VALVE meter is not depressed except as indicated in the checks and tests.

## 227. Special Readings

*a. Buzz Voltages.*

*Buzz Voltage Values With MIL–0–5606 and GB–104–566 Hydraulic Oil*

| Expected ambient outside temperature | Hydraulic fluid | Buzz voltage setting % meter reading on TCU |
|---|---|---|
| 160° F. to 50° F | MIL–0–5606 | 85%–105%. |
| 100° F. to 20° F | GB–104–566 (MPD–2067). | 62%–76%. |
| 70° F. to 10° F | GB–104–566 (MPD–2067). | 85%–105%. |
| 40° F to −40° F | GB–104–566 (MPD–2067). | 122%–150%. |

The buzz voltage should be adjusted for the values specified for the *outside* temperature regardless of the temperature in the magazine or assembly area building. Final buzz voltage adjustments should be made on internal power in the launching area.

*b. Response Time.* For missiles with serial number 7117 and above and guidance section model number GS–16725 is 0.61 ± 0.07 μ/sec. On others on which field change 5026 or 5027 have not been made, consult the missile log book.

*c. Delta (Delay) Time.* Use 0.25 μ/sec delta time unless the delta time check of the rf test set indicates this is not the correct value.

## 228. Missile Check at Launching Area

*Note.* This check is to be performed only after completion of daily and weekly checks. Note preparation for the check in paragraph 226 and readings in paragraph 227.

| *Test to be performed* | *Satisfactory operating requirements* |
|---|---|
| 1. LOP TEST-FIRE switch to FIRE | VOLTS meter on LOP reads 0. |
| 2. LOP missile selector to missile under test. | |
| 3. LOP launcher DC Power Switch ON | VOLTS meter on LOP reads 27–30 volts. |
| 4. LOP heaters and gyros switch ON | DC AMPERES meter on LOP reads 4–6 amperes. |
| 5. LOP VIBRATOR switch ON | After 60 seconds, vibrator energized and LOP DC AMPERES meter reading changed to 8–10. |
| 6. LOP CAGE-UNCAGE switch to CAGE. | |

| *Test to be performed* | *Satisfactory operating requirements* |
|---|---|
| 7. Missile power supply voltage. | |
| *a.* 230 | Voltage meter on TCU reads 100 ±10%. |
| *b.* 300 | Voltage meter on TCU reads 100 ±10% |
| *c.* STRG PLATE | 1. VOLTAGE meter reads 100 ±10% for missiles with guidance unit model No. GS-15660.<br>2. VOLTAGE meter reads 96 ±10% for missiles with guidance unit model Nos. GS-17120 and GS-16725. |
| *d.* 150 | VOLTAGE meter reads 100 ±10%. |
| *e.* CON SIG | VOLTAGE meter reads 100 ±10%. On missiles with guidance unit Model No. GS-16725 adjust for 100%. |
| *f.* FIN VOLT | VOLTAGE meter reads 25-50%. The minimum limit is reduced by a reading of 1% for each 1,000 ft of altitude above 5,000 ft. |
| *g.* STRG PLATE BAL (depress SERVO METER SENSITIVITY pushbutton). | SERVO meter reads 0 ±10%. |
| *h.* CONT SIG BAL (depress SERVO METER SENSITIVITY pushbutton). | SERVO meter reads 0 ±10% (missiles with guidance unit Model No. GS-15660 adjust to). |
| 8. RECEIVER SENSITIVITY. TEST SELECTOR switch to RESP TIME A (CODE & SENS for GS-15636 Test Set). | |
| *a.* ANT-2. | |
| (1) Set ANT 2-4 switch to ANT 2. | |
| (2) Adjust TIME-MICROSECOND dial to MISSILE code. | |
| (3) Set ATTEN DB control to 0. | |
| (4) Adjust RESPONSE control | RESPONSE OR VOLTAGE meter reads 60-80. |
| (5) Increases ATTEN DB setting until RESPONSE OR VOLTAGE reading drops off or becomes erratic. | ATTEN DB reading of 5 or higher. |
| *b.* ANT-4. Repeat steps 8*a*(3), (4), and (5) above with ANT 2-4 switch set to ANT 4. | ATTEN DB reading of 5 or higher. |
| *c.* Compare ANT 2 and ANT 4 ATTEN DB settings. | Difference between ANT 2 and ANT 4 ATTEN DB settings 5 or less. |
| 9. Measurement of Transmitter Power. | |
| *a.* Set TEST SELECTOR switch to TRANS TEST (CODE & TRANS TEST for GS-15636). | |
| *b.* Set ATTEN DB to 30. | |
| *c.* Adjust RF POWER DB switch for an RF POWER METER reading between 0 and 2. | Sum of RF POWER DB switch setting and RF POWER METER reading 15DB or less. |
| 10. Measurement of transmitter frequency. Adjust MEAS FREQ control for maximum dip toward DC on RF POWER meter. Determine frequency from MEAS FREQ chart. | Frequency within ±3mc of specified missile frequency. Adjust missile transmitter frequency if necessary. Detune frequency meter at completion of test. |
| 11. Nonresponse to adjacent codes. | |
| *a.* Adjust RESPONSE control for a RESPONSE or VOLTAGE meter reading of 60-80. | |
| *b.* Change TIME-MICROSECONDS dial settings in 0.75-microsecond steps from 1.50 to 10.75. | No indication on RESPONSE OR VOLTAGE meter in any position other than the assigned code. |
| 12. Pattern modulator motor operation. Connect telephone set to MON jack. Depress MON switch. | Listen for warble. Increase RESPONSE control as necessary to make tone audible. |
| 13. Measurement of response time. | |
| *a.* Set TEST SELECTOR switch to RESP TIME A. (For GS-15636 set TSS to RESPONSE TIME, switch to TEST SIG.) | |
| *b.* Set TIME-MICROSECOND dial to missile code plus delta time plus 0.1 microseconds. | Record time dial setting in appropriate space in check sheets. |
| *c.* Set RESPONSE control fully clockwise. | |

| *Test to be performed* | *Satisfactory operating requirements* |
|---|---|
| 13. Measurement of response time—Continued. | |
| *d.* Turn ADJ CODE control to obtain maximum reading on the RESPONSE OR VOLTAGE meter. Keep the reading on scale with the RESPONSE control. | |
| *e.* Set TEST SELECTOR switch to RESP TIME B. (For GS–15636 set RESPONSE TIME switch to MISSILE.) | |
| *f.* Turn RESPONSE control fully clockwise. | |
| *g.* Increase TIME-MICROSECOND dial setting to obtain maximum indication on RESPONSE OR VOLTAGE meter. Keep reading on scale with RESPONSE control. | Record time dial setting in appropriate space in check sheets. |
| *h.* Subtract the recorded TIME-MICROSECOND dial settings in 13*g* from those in 13*b* above. The result is the measured RESPONSE TIME. | Response time must be within the limits specified for the missile serial number. See paragraph 227. |
| 14. BURST TIME measurement. | |
| *a.* Set TEST SELECTOR switch to COMM SIG. | |
| *b.* Operate RESET switch | Glow at 0 or reset position only. |
| *c.* 3 seconds after RESET operate START switch. | BURST TIME-MILLISECONDS counting tubes indicate BURST TIME. |
| *d.* Repeat steps *b* and *c* above 15 times to obtain 15 burst time readings. | Ten of the burst time readings must be within the 64 ± 5-millisecond tolerance (63 ± 4 milliseconds for the GS–15636 test set). |
| 15. Fail-Safe Time Measurement. | |
| *a.* Operate RESET switch | Glow at 0 or RESET position only. |
| *b.* Check missile RESPONSE | RESPONSE OR VOLTAGE meter indication. |
| *c.* Turn COMMAND CAL switch to TIME position. | |
| *d.* Operate the START switch and simultaneously begin counting (with GS–15636 turn ADJ CODE control to remove commands and instantly operate start switch) in one-second intervals. | RESPONSE OR VOLTAGE meter indication falls off. Glow on all BURST TIMER cathodes. |
| *e.* Stop counting when XI milliseconds-counting tube indicates receipt of fail-safe signal. | Glow stops in ONE position. |
| *f.* The total count is the FAIL-SAFE time | Record FAIL-SAFE time. Limits 3 to 7 seconds. |
| 16. BUZZ VOLTAGE ADJUSTMENTS (Missile Hydraulics ON). | |
| *a.* Roll buzz. | |
| (1) Center ailerons by presetting roll gyro. | |
| (2) Depress ROLL FIN pushbutton on TCU. | |
| (3) Hold VALVE VOLTAGE switch in BUZZ position. | Read BUZZ voltage on VALVE meter. |
| (4) Adjust the roll buzz voltage through the port marked RBZ in the guidance section casting. | See paragraph 227. Feel buzz on ailerons. |
| *b.* Pitch buzz. | |
| (1) Place the PITCH COMMAND switch to OG on the rf test set. | |
| (2) Depress PITCH FIN pushbutton on TCU. | |
| (3) Hold VALVE VOLTAGE switch in BUZZ position. | Read BUZZ voltage on VALVE meter. |
| (4) Adjust the pitch buzz voltage through the port marked PBZ in the guidance section casting. | See paragraph 227. Feel buzz on ailerons. |

| *Test to be performed* | *Satisfactory operating requirements* |
|---|---|
| 16. BUZZ VOLTAGE ADJUSTMENTS—Continued. | |
| *c.* Yaw buzz. | |
| (1) Place the YAW COMMAND switch to OG on the rf test set. | |
| (2) Depress the YAW FIN pushbutton on TCU. | |
| (3) Hold VALVE VOLTAGE switch in BUZZ position. | Read BUZZ voltage on VALVE meter. |
| (4) Adjust the yaw buzz voltage through the port marked YBZ in the guidance section casting. | See paragraph 227. |
| 17. YAW SERVO OPERATION (Missile Hydraulics ON). | |
| *a.* Depress ACC pushbutton | |
| *b.* Depress SERVO METER SENSITIVITY pushbutton. | SERVO METER reads −35% to −60%. |
| *c.* Depress RATE pushbutton | |
| *d.* Depress SERVO METER SENSITIVITY pushbutton. | SERVO METER reads −10% to +10%. |
| *e.* Depress FIN pushbutton and place the VALVE VOLTAGE toggle switch to the BUZZ position. | Valve meter reads (see par. 227). Feel fins for buzz. |
| *f.* Depress SERVO METER SENSITIVITY pushbutton. | Servo meter reads −9% to −29%. |
| *g.* Depress VALVE METER SENSITIVITY pushbutton. | Valve meter reads 0±100%. |
| 18. PITCH SERVO OPERATION. | |
| *a.* Depress ACC pushbutton | |
| *b.* Depress SERVO METER SENSITIVITY pushbutton. | Servo meter reads −35% to −60%. |
| *c.* Depress RATE pushbutton | |
| *d.* Depress SERVO METER SENSITIVITY pushbutton. | Servo meter reads −10% to +10%. |
| *e.* Depress FIN pushbutton and place the VALVE VOLTAGE toggle switch to the BUZZ position. | See paragraph 227. Feel fin for buzz. |
| *f.* Depress SERVO METER SENSITIVITY pushbutton. | Servo meter reads −9% to −29%. |
| *g.* Depress VALVE METER SENSITIVITY pushbutton. | Valve meter reads 0±100%. |
| 19. ROLL SERVO OPERATION. | |
| *a.* Place GYRO PRESET switch to MANUAL at section control cabinet and designate launcher. | Green DESIGNATE lamp is lighted. |
| *b.* Place ROLL POSITION switch to PRESET. Set MANUAL RESOLVER to the same reading as the LAUNCHER ORIENT RESOLVER. | Data converter card reads 0 mils. |
| *c.* Place LOP CAGE-UNCAGE switch to UNCAGE. | Audible click heard at guidance section. |
| *d.* Depress POS pushbutton on TCU. | |
| *e.* Depress SLEW pushbutton at section control cabinet. | Null meter needle at section control cabinet remains stationary. Servo meter needle on TCU remains stationary (ON SENSITIVE SCALE). |
| *f.* Place LOP CAGE-UNCAGE Switch to CAGE. | |
| *g.* Place ROLL POSITION switch on TCU to FLIGHT. | |
| *h.* Depress SLEW pushbutton on section control cabinet. | Servo meter at TCU deflects left and right alternately. Null meter at section control cabinet deflects left and right alternately. Ailerons deflect accordingly. |

| *Test to be performed* | *Satisfactory operating requirements* |
|---|---|
| 19. ROLL SERVO OPERATION—Continued. | |
| *i.* Release SLEW pushbutton | Null and SERVO METER needles return to midposition. |
| *j.* Place ROLL POSITION switch on TCU to PRESET. | |
| *k.* Depress SLEW pushbutton on section control cabinet. | Servo meter at TCU deflects left and right alternately. Null meter at section control cabinet deflects left and right alternately. Ailerons deflect accordingly. |
| *l.* Release SLEW pushbutton | Null and servo meter needles return to midposition. |
| *m.* Set manual resolver to reading of launcher orient resolver +800 mils. | Data converter card reads 800 mils. Ailerons deflect for CCW roll. |
| *n.* Undesignate launcher | Red NOT DESIGNATED lamp is lighted. |
| *o.* Place ROLL POSITION switch on TCU to FLIGHT. | |
| *p.* Depress SERVO METER SENSITIVITY Pushbutton. | Servo meter reads −35% to −45%. |
| *q.* Place ROLL POSITION switch on TCU to PRESET. | |
| *r.* Designate launcher | Green DESIGNATE lamp is lighted. |
| *s.* Set manual resolver to reading of launcher orient resolver −800 mils. | Data converter card reads 5,600 mils. Ailerons deflect for CW roll. |
| *t.* Undesignate launcher | Red NOT DESIGNATED lamp is lighted. |
| *u.* Place ROLL POSITION switch on TCU to FLIGHT. | |
| *v.* Depress SERVO METER SENSITIVITY pushbutton. | Servo meter reads +35% to +45%. |
| *w.* Place ROLL POSITION switch to PRESET. | |
| *x.* Designate launcher | Green DESIGNATE lamp is lighted. |
| *y.* Set manual resolver to reading of launcher orient resolver. | Data converter card reads 0 mils. |
| *z.* Undesignate launcher | Red NOT DESIGNATE lamp is lighted. |
| *aa.* Depress SERVO METER SENSITIVITY pushbutton. | Servo meter reads 0%. |
| *ab.* Depress RATE pushbutton on TCU | |
| *ac.* Depress SERVO METER SENSITIVITY pushbutton. | Servo meter reads −10% to +10%. |
| *ad.* Depress FIN pushbutton and put VALVE VOLTAGE switch on TCU to BUZZ. | See paragraph 227. Feel ailerons. |
| *ae.* Depress SERVO METER SENSITIVITY pushbutton. | Servo meter reads −10% to +10%. Check to see that ailerons are within the scribe lines. |
| *af.* Depress SERVO METER SENSITIVITY pushbutton. | Valve meter reads 0 ± 100%. |
| 20. Pressure pickup check. | |
| *a.* Missile in manual flight position (battery box up). | |
| *b.* ROLL POS switch on TCU to PRESET | Ailerons deflect slightly. |
| *c.* YAW COMMAND and PITCH COMMAND switches on rf test set to OG. | |
| *d.* Stagnation pressure pump connected to pressure pickup fitting on missile. | |
| *e.* Open vent fitting on pump | |
| *f.* Depress FIN VOLT pushbutton on the VOLTAGE SELECTOR bank on the TCU. | |
| *g.* Turn the pump selector knob to PRESSURE. | |
| *h.* Apply approximately 55 psi pressure from pump. | Pump meter indicates approximately 55 psi. |
| *i.* Observe control fins and ailerons | Deflect toward center scribe lines. |
| *j.* Observe voltage meter on TCU | Increased reading (deflects away from zero). |
| *k.* Release pressure and turn pump selector knob to VACUUM. | |
| *l.* Apply a vacuum | Pump meter indicates a vacuum. |
| *m.* Observe control fins and ailerons | Deflect away from center scribe lines. |
| *n.* Observe voltage meter on TCU | Decreased reading (deflects toward zero). |
| *o.* Disconnect pressure pump | |

| *Test to be performed* | *Satisfactory operating requirements* |
|---|---|
| 21. PRECISE COMMAND CHECKS. | |
| *a.* Yaw servo operation. | |
| (1) Position YAW COMMAND switch to +5G. | Fins respond hard over. |
| (2) Depress YAW +5G pushbutton on TCU. | |
| (3) Depress SERVO METER SENSITIVITY pushbutton. | Servo meter reads −10% to +10%. |
| (4) Position YAW COMMAND switch to −5G. | Fins respond hard over. |
| (5) Depress the YAW −5G pushbutton on TCU. | |
| (6) Depress SERVO METER SENSITIVITY pushbutton. | Servo meter reads −10% to +10%. |
| (7) Release the YAW FIN pushbutton on TCU. | Fins respond hard over. |
| (8) Place the YAW COMMAND switch to OG. | |
| (9) Depress the SERVO METER SENSITIVITY pushbutton. | −19% ±10% reading on SERVO METER. |
| (10) Place YAW COMMAND switch in the FINS position. | |
| (11) Adjust the YAW FINS knob for 0% ±10% on the SERVO METER (sensitive scale). | YAW fins within scribe lines. |
| *b.* Pitch servo operation. | |
| (1) Position PITCH COMMAND switch to +5G. | Fins respond hard over. |
| (2) Depress PITCH +5G pushbutton on TCU. | |
| (3) Depress SERVO METER SENSITIVITY pushbutton. | Servo meter reads −10% to +10%. |
| (4) Position PITCH COMMAND switch to −5G. | Fins respond hard over. |
| (5) Depress the PITCH −5G pushbutton on TCU. | |
| (6) Depress SERVO METER SENSITIVITY pushbutton. | Servo meter reads −10% to +10%. |
| (7) Release PITCH FIN pushbutton on TCU. | Fins respond hard over. |
| (8) Place the PITCH COMMAND switch to OG. | |
| (9) Depress the SERVO METER SENSITIVITY pushbutton. | −19% ±10% reading on SERVO METER. |
| (10) Place PITCH COMMAND switch in the FINS position. | |
| (11) Adjust the PITCH FINS knob for 0% ±10% on the SERVO METER (sensitive scale). | PITCH fins within scribe lines. |
| 22. INTERNAL OPERATIONS (DISCONNECT BURST CABLE). | |
| *a.* Remove tunnel number 1. Connect test set 737/U to missile battery (read battery voltage at end of INTERNAL TEST before missile is turned off). | Battery voltage 28.5 volts or higher. |
| *b.* Place INTERNAL-EXTERNAL switch at LOP to INTERNAL. | VOLTMETER reads 27 to 30 volts. AMMETER reads 0. |
| *c.* Place YAW COMMAND switch to FINS. | |
| *d.* Turn FINS knob from maximum CW to maximum CCW. | Missile fins respond smoothly from +2g to −2g. |
| *e.* Place YAW COMMAND switch to OG. | |
| *f.* Place PITCH COMMAND switch to FINS. | |

| *Test to be performed* | *Satisfactory operating requirements* |
|---|---|
| 22. INTERNAL OPERATIONS—Continued. | |
| *g.* Turn FINS knob from maximum CW to MAXIMUM CCW. | Missile fins respond smoothly from +2g to −2g. |
| *h.* Place PITCH COMMAND switch to OG. | |
| *i.* Depress YAW, PITCH, and ROLL COMMAND TEST pushbuttons on LOP. Simultaneously hold down momentarily. | Fins and ailerons respond hard over. |
| *j.* Turn MISSILE HYDRAULICS off | Hydraulic package deactivates. |
| *k.* Place INTERNAL-EXTERNAL switch to EXTERNAL. | Voltmeter retains previous reading. Ammeter reads 8–10 amperes. |
| *l.* Recheck transmitter frequency. | |
| *m.* Turn off all power to test equipment section and launcher when all missiles are checked. | |

## 229. Mechanical Checks in Launching Area

*Note.* These checks to be performed only after completion of the daily and weekly checks.

| | *Satisfactory operating requirements* |
|---|---|
| *a. Missile checks* | |
| (1) Guidance system desiccator plug (under forward section of tunnel No. 1). | Replace the plug if the desiccant is pink or red. |
| (2) Guidance section pressurization. | |
| (*a*) Pressurize missile to 18 psi. | |
| (*b*) Check pressure after 3 minutes | Maximum drop 1 psi in 3 minutes |
| (*c*) Release pressure. | |
| (3) Missile propellant leakage. | |
| (*a*) Check for signs of corrosion at: | |
| *1.* The oxidizer filler fitting. | |
| *2.* The fuel filler fitting. | |
| *3.* The starting mix filler fitting. | |
| *4.* The oxidizer vent plug. | |
| *5.* The fuel vent plug. | |
| *6.* The starting mix vent plug. | |
| *7.* The oxidizer tank drain plug. | |
| *8.* The fuel tank drain plug. | |
| *9.* All tank joints. | |
| (*b*) Check for acid fumes at: | |
| *1.* All points specified in (*a*) *1*, *4*, *7*, and *9* above. | |
| *2.* The oxidizer diaphragm. | |
| *3.* The missile sustainer motor. | |
| (*c*) Check for acid leaks in the bleed tube (tunnel number 1) by the pressure regulator. | |
| (4) Air regulator overboard dump check to insure that overboard dump port is completely open. | No audible leak from overboard dump port when 50 psi maximum applied to regulated air line. |
| (5) Visually inspect air regulator lanyard assembly. | No corrosion, dirt, or excessive lubricant and adjust. |
| *b. Launcher checks* | |
| (1) Missile away switch clearance | Switch arm has ⅛-inch travel after closing. |
| (2) Spare fuzes in J-box | All present and usable. |
| (3) Launcher lubrication performed as prescribed in LUBRICATION ORDERS 11–75, 11–76, and 11–77 in TM 9-5000-38. | |
| (4) Preventive maintenance performed as prescribed in TM 9-5000-35. | |

# CHAPTER 10
# MISSILE AND BOOSTER PREPARATION

## Section I. RESPONSIBILITY

### 230. Personnel

The following personnel are used in the assembly and test procedures. The appropriate TOE should be referred to for the grade, number of men, and the section to which they are assigned.

*a.* One assembly sergeant (CS).
*b.* Two missile mechanics, Nos. 1 and 2.
*c.* One electronics materiel specialist, No. 3.
*d.* One air compressor operator, No. 4.
*e.* One crane operator (crewman), No. 5.
*f.* Three crewmen, Nos. 6, 7, and 8.
*g.* One generator specialist, No. 9.

### 231. Sequence

The missile, booster, fins, propellents, explosive components, and other materials required to prepare the missile and booster for firing will be delivered in their shipping containers to an assembly and test area. It is then necessary to assemble, checkout, and join the missile and booster, add the propellents, and install the warheads, detonating cords, and arming mechanisms. The exact area in which propellent servicing and explosive component installations will be accomplished may vary, due to such things as the relative location of the assembly area to the launching site. This manual will detail the steps to assemble, checkout, and prepare the missile and booster. THE SEQUENCE IN WHICH THE STEPS ARE GIVEN IS NOT TO BE INTERPRETED AS A DIRECTIVE THAT THEY CANNOT BE COMPLETED AT ANY OTHER LOCATION. HOWEVER, ALL STEPS MUST BE COMPLETED BEFORE THE MISSILE IS READY TO FIRE. Entries should be made in the assembly area checklist (par. 296) as each check is completed. Items which require no explanation appear in the checklist only.

## Section II. ASSEMBLY

### 232. Opening Missile Container

(fig. 149)

*a. Two-Piece Container.*

**1** checks the humidity indicator for SAFE color. If the indicator does not show an excessive amount of moisture, he reports SAFE—UNCRATE. He then removes the cover from the receptacle at each end of the upper half of the container, removes the valve core from the pressurizing valve assembly, and allows the container to depressurize.

***Caution:*** Do not attempt to open the container until the pressure has been completely released through the open valve.

**1**, **5**, **6**, and **7** remove the bolts, nuts, and lockwashers which fasten the top and bottom halves of the container together. Use the tools in the missile and booster uncrating tool pack.

**6** and **7** remove the top half of the container, using the joining hoist or the power crane. **5** will operate the power crane if it is used.

**1** makes a preuncrating check of this missile.

*b. End-Opening Container* (fig. 150).

**1** removes the receptacle cover from the forward end of the missile container and **5** from the aft end of the container.

**1** checks the humidity indicator for SAFE color. If the indicator does not show an

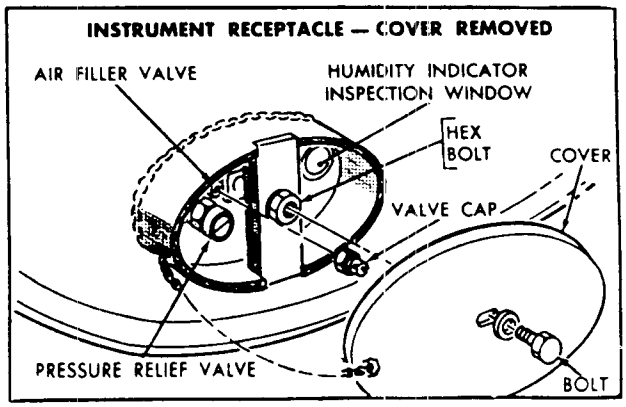


*Figure 149. Removing top from two-piece container.*

excessive amount of moisture, he reports SAFE-UNCRATE.

**1** and **5** depressurize the container by removing the air filler cap, the ⅛-inch air filler valve, and the valve located in the ¼-inch air filler valve.

***Caution:*** Do not attempt to open the container until the pressure has been completely released through the open valve.

**5, 6,** and **7** remove the bolts, nuts, and lockwashers, securing the aft end of the container and remove the end.

*Figure 150. End-opening container.*

## 233. Opening Fin Container

**8** opens the fin containers and inspects the contents while **1, 5, 6,** and **7** are opening the missile container.

## 234. Removing Missile From Container

*a. Two-Piece Container* (fig. 151).

**1** makes certain the four upper handling-ring segments are securely attached to the missile.

**5, 6,** and **7** remove the silica-gel bags from each end of the missile container.

**6** operates the hand crank to lower the hook on the joining hoist until **7** can attach the missile hoist beam to the joining hoist.

**5, 6,** and **7** position the joining hoist as closely as practical to the opened missile container.

**6** operates the joining hoist crank to lower the missile hoist beam until the hoist beam links can be attached to the handling rings.

**5** and **7** attach the joist beam links to the handling rings on the missile with the four steel pins provided. Make certain the hook is attached to the point on the beam marked LIFT POINT FOR COMPLETE MISSILE. The hoist must lift the missile at the corresponding center of gravity of the complete missile. If lifted at the wrong point, the missile will swing downward at one end, resulting in possible injury to personnel or damage to the missile.

**5, 6,** and **7** remove the four bolts holding the missile to the cradle.

**6,** operating the joining hoist crank, carefully raises the missile until it is clear of the container, while **5** and **7** guide the missile by hand.

After the missile is clear of the container, **5, 6,** and **7** roll the hoist and missile away from the container so as to allow access to the underside of the missile.

**5, 6,** and **7** remove the four lower handling-ring segments from inside the shock absorber rail channels in the container and install the segments on the missile.

While **5** and **7** guide the missile so that the handling rings ride on the rollers, **6** lowers the missile on the missile dolly.

***Caution:*** Extreme care must be exercised during the lifting of the missile to avoid damage to the missile or injury to personnel.

**6** and **7** remove the four steel pins fastening the hoist beam sling to the handling rings, and then move the joining hoist and missile hoist beam away from the missile dolly. **1, 5, 6,** and **7** remove tunnels number 2 and 4, the center and aft warhead covers, and install the support strut.

*b. End-Opening Container* (fig. 152).

**6** and **7** move the joining hoist close to the container.

**5, 6,** and **7** roll the missile out of the container until it reaches the stops. See figure 152 for steps.

*Note.* The missile will not come all the way out of the container.

**5, 6,** and **7** position the hoist over the missile and fasten the missile hoist beam to the handling rings.

**5, 6,** and **7** remove the bolts from the ring securing the missile to the cradle.

**6** operates the hoist so as to raise the missile while **5** and **7** roll the hoist away from the container until the missile is completely out of the container.

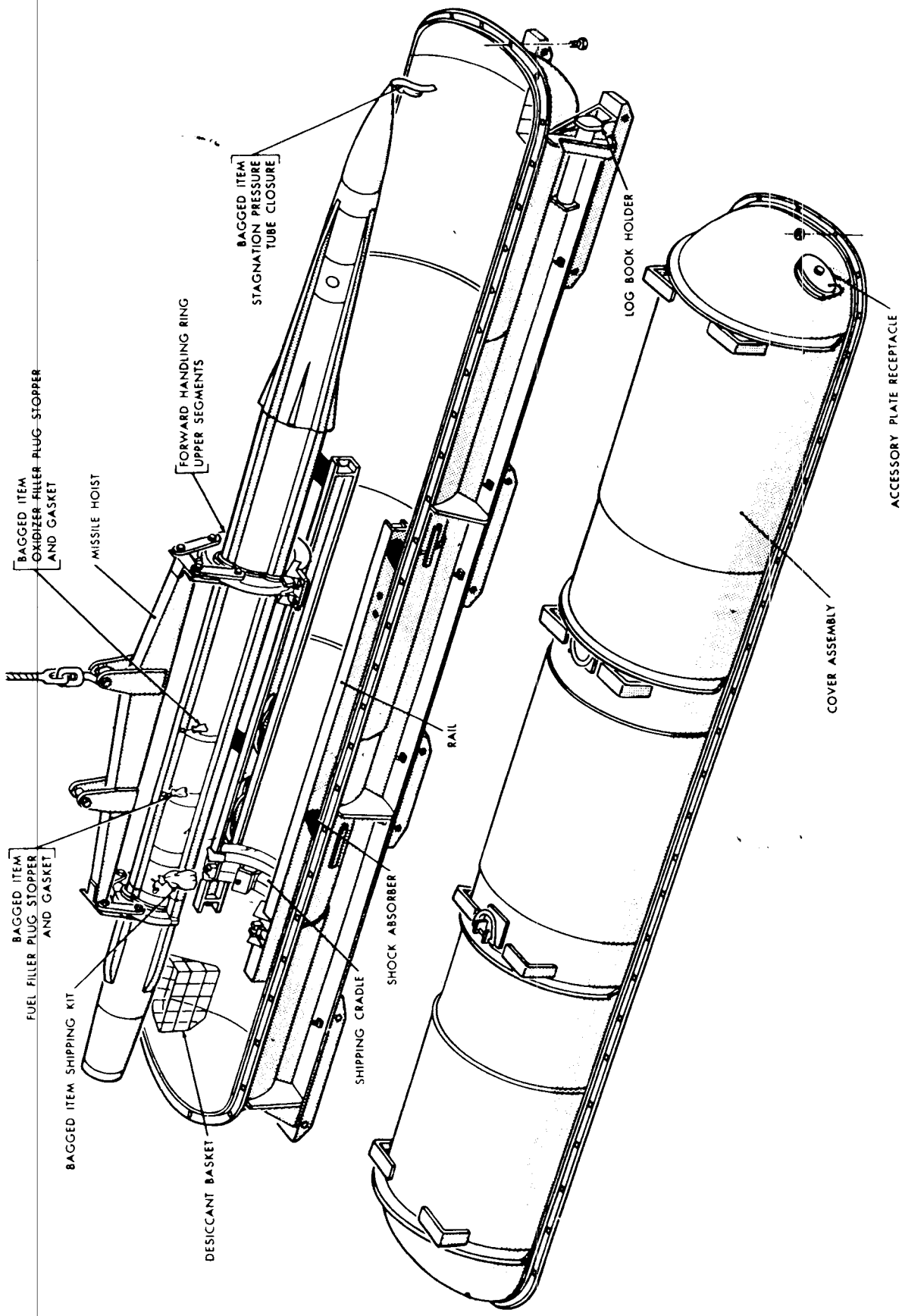


*Figure 151. Removing missile from two-piece container.*

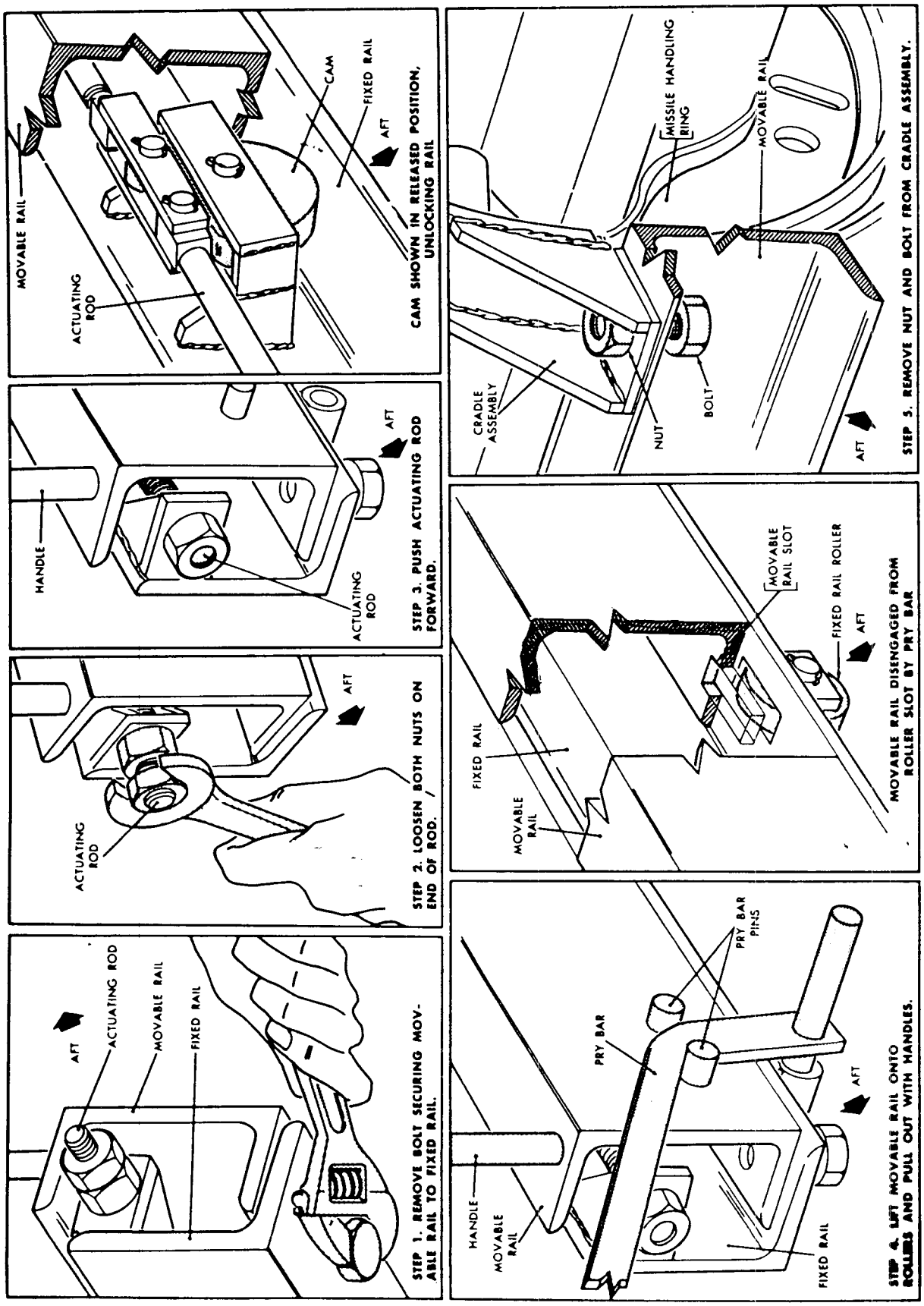


*Figure 152. Removing missile from end-opening container.*

**5, 6,** and **7** place the missile on the missile dolly.

**1** and **2** make a complete visual check of the missile and accessories.

## 235. Booster Uncrating

*a. Metal Container.*

**6** and **7** remove the bolts holding the top half of the booster shipping container to the bottom half.

**5** removes the silica-gel bags from the booster container.

***Caution:*** The silica-gel bags, when removed, must be placed in a container of water. Absorption of nitroglycerine fumes from the booster propellant makes these bags potential explosives.

**5** performs a continuity test on the booster. If the test shows unsatisfactory, prepare another booster.

**6** inspects the fin mounting and fairing assembly.

**5** fastens the booster hoist beam to the joining hoist and rolls the hoist with the beam to the booster container.

**6** lowers the hoist beam to the booster until the booster hoist beam can be secured to the booster.

**5, 6,** and **7** place the slings around the booster and fasten the slings to the booster hoist beam.

**6** operates the hoist and lifts the booster from its container.

**5** checks the resonance rods. There should be no longitudinal motion. The propellant grain should have no cracks.

**5** and **6** remove one bolt from each of the plates on the bottom of the forward and aft lugs and turn the plate approximately 90°. PLACE THE REMOVED BOLTS ON THE DOLLY. These bolts are required when the booster is placed on the transporting and handling rail.

**5, 6,** and **7** roll the hoist and booster away from the shipping container and place the booster on the booster dolly.

**5, 6,** and **7** secure the booster to the dolly with the clamp and eyebolt assemblies.

**5** uncrates the thrust fitting and insures the wooden buffer ring in the thrust fitting is installed and has not been damaged during shipment, while **6** and **7** are preparing to remove the booster from the container.

**5** and **7** fasten the thrust fitting to the forward end of the booster case. Be sure the hole on the outer edge of the forward end of the thrust fitting is positioned to receive the propellant system actuating lanyard (fig. 153).

*b. Wooden Container* (fig. 64).

Driver brings the booster container on a truck to the uncrating area.

**1** removes the booster igniter from the storage compartment in the aft end of the booster container.

**5, 6,** and **7** cut the four steel bands and remove the lag screws holding the ends and sides to the bottom of the container.

**5, 6,** and **7,** using the davit or crane, lift the top, sides, and ends of the container up until they clear the booster and set them on the truck next to the booster.

**5** checks the resonance rods. There should be no longitudinal motion. The propellant grain should have no cracks.

**1** performs a continuity check on the booster. When completed, install the shorting plugs and report SATISFACTORY or UNSATISFACTORY. If the continuity check shows unsatisfactory, replace the top and sides on the bottom of the container and obtain another booster.

**5, 6,** and **7** attach the booster hoist beam to the davit or crane and the hoist beam slings around the booster.

**1, 5, 6,** and **7** remove the bolts securing the booster to the bottom of the shipping container.

**5** raises the booster until it clears the bottom of the container while **6** and **7** steady the booster.

**D** drives the truck with the empty booster container away.

**1, 5, 6,** and **7** loosen the lug plates and secure the booster to the rail.

## 236. Propulsion Low Pressure Test

(fig. 154)

While **5, 6,** and **7** are uncrating the booster, **1** and **4** will check the missile propulsion plumbing.

*a.* The propellent system fuel and acid tanks and the diaphragm isolated fuel line are each pressured to 50 psi of nitrogen when shipped. The missile will be received with three automotive tire-type valves installed in the oxidizer-filler fitting, the fuel-filler fitting, and the starting-

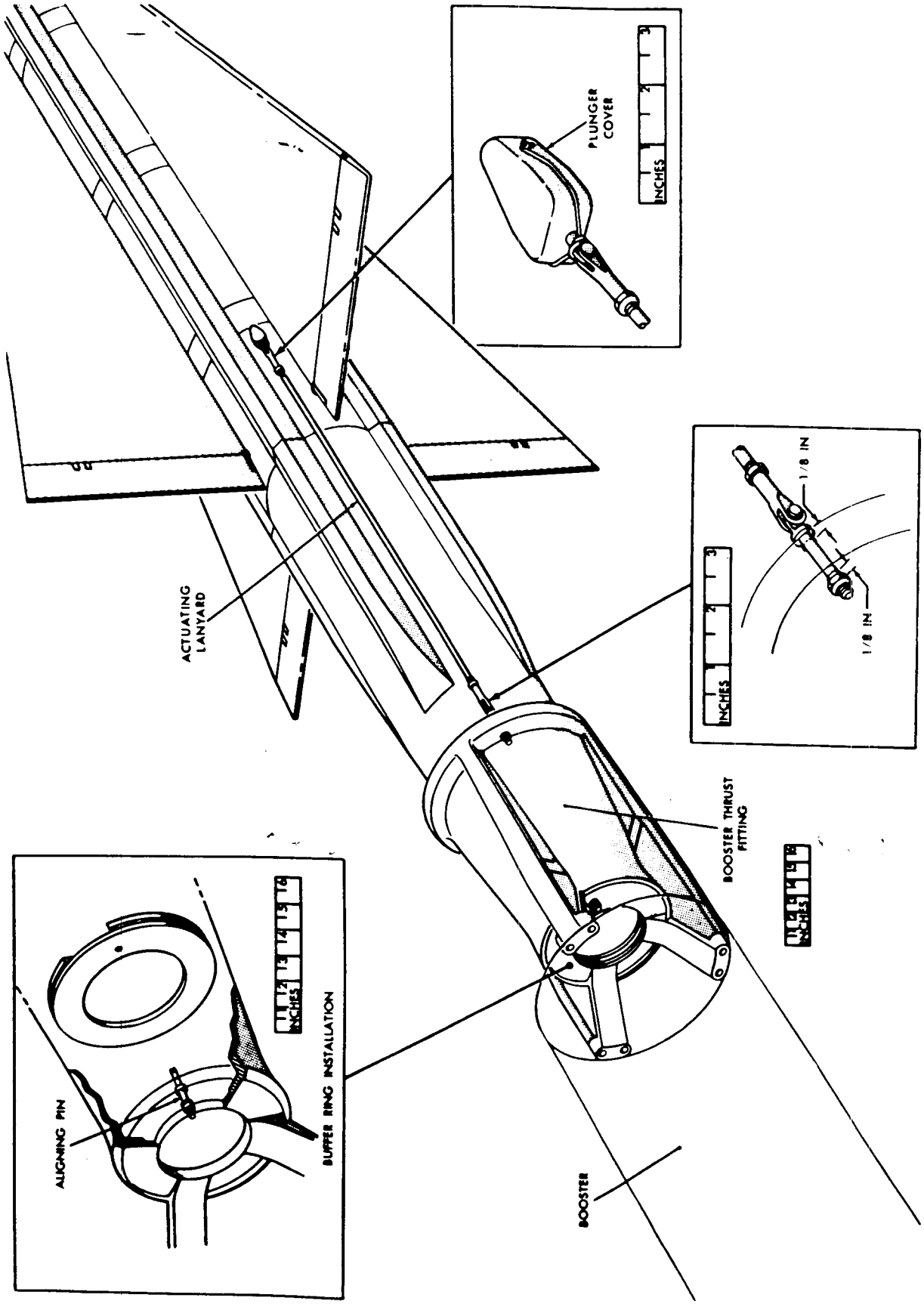


*Figure 153. Propellant system actuating lanyard.*

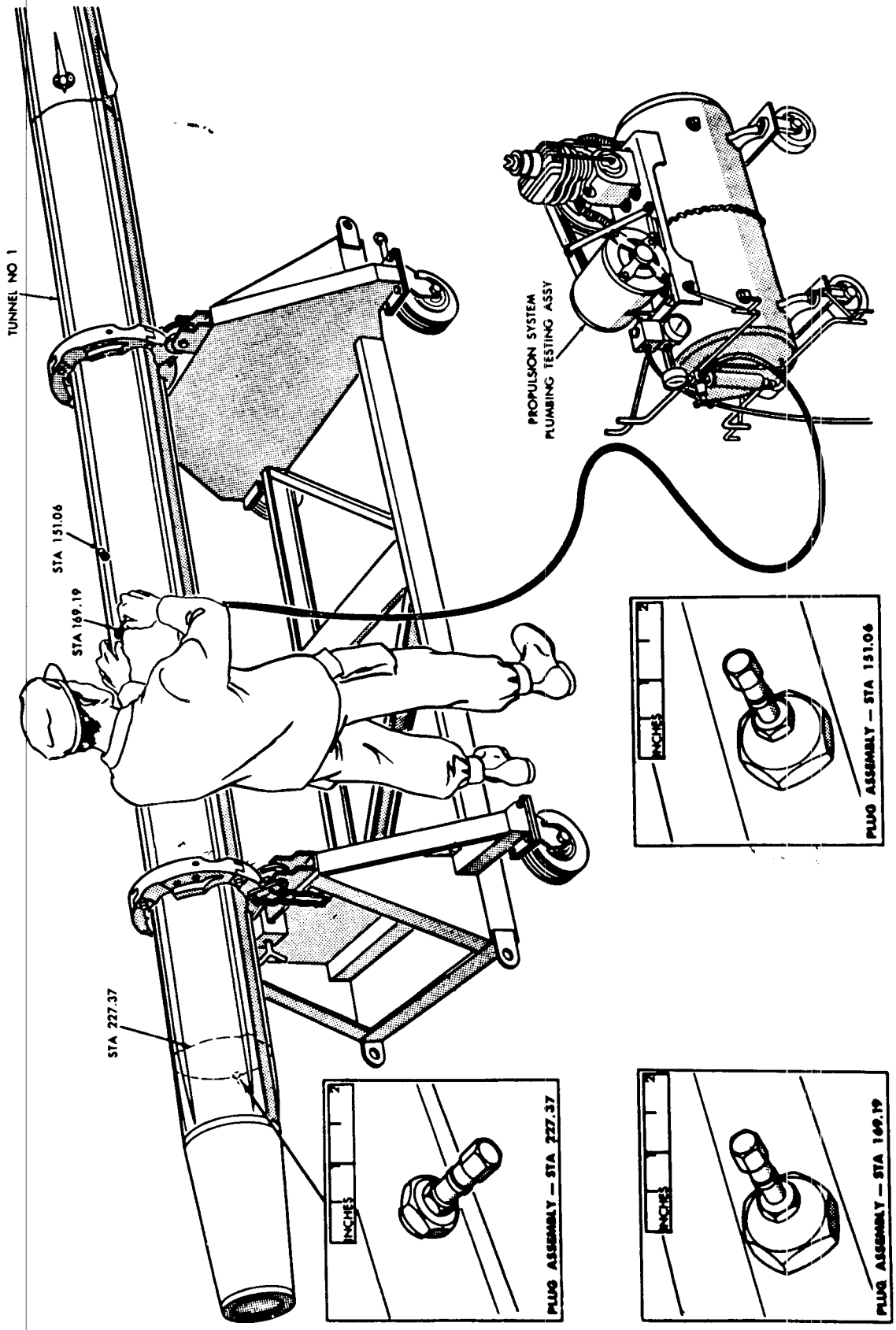


*Figure 154. Propulsion plumbing test.*

fluid-filler fitting. The regular filler-fitting plugs will be in individual cloth bags tied to each test valve. Plastic (teflon) stoppers and new gaskets will also be found in the bags attached to the fuel and oxidizer-filler fitting test plugs. The procedure for testing the propulsion plumbing is as shown in *b* through *i* below.

*b.* Check the pressure in the oxidizer tank and fuel line. If the pressure is 25 psi or more the tank is acceptable.

*c.* Check the pressure in the fuel tank. If the pressure is 25 psi or more, depressurize the fuel tank.

*d.* Remove the test-fitting plug and teflon gasket from the fuel filler fitting. Remove the teflon gasket, stopper, and fillerplug from the shipping bag and install loosely in the fuel filler fitting.

*e.* Depressurize the oxidizer tank and remove the test-fitting and teflon gasket, stopper, and filler plug from the shipping bag and install them loosely in the oxidizer filler fitting.

*f.* Recheck the fuel line pressure. If 25 psi or more, bleed the fuel line pressure and remove the test fitting.

*g.* Remove the starting fluid valve plug from the shipping bag and install loosely in the starting mix valve filler fitting.

*h.* If the pressure is below 25 psi at any of the three test points, pressurize the tank or line to 50 psi with the propulsion-plumbing tester. After 4 hours, check the pressure and add or release air as necessary to have a 50 psi reading on the gage. Allow the missile to stand for 24 hours. If the pressure after the 24 hours is below 40 psi, the propulsion plumbing system must be given a complete leakage test.

*i. Complete Leakage Test.* If the pressure is below 40 psi at:

(1) The starting-fluid fitting. **1** applies a soap solution to all line connections and plugs, including the tank fuel-outlet fitting, and observes for bubbles. No leakage is allowed.

(2) The fuel-tank-filler fitting. **1** applies a soap solution to all fuel-tank-line connections, including the tank-outlet fitting and the diaphragm connection between the oxidizer and fuel tanks and observes for bubbles. No leakage is allowed.

(3) The oxidizer-tank-filler fitting. **1** applies a soap solution to all oxidizer-tank-line fittings, including the propellent-valve connection, and observes for bubbles. No leakage is allowed.

(4) If leakage is discovered which cannot be corrected by tightening a joint, the missile must be rejected and returned to a higher echelon for repair.

## 237. Fin and Aileron Attachment

*a. General.* The main fins, ailerons, and control fins are attached while the missile is on the missile dolly. The necessary tools are stored in the fin-installation tool pack.

*b. Main Fins and Ailerons* (fig. 155).

**1** rotates the missile until one set of fin-attach holes and the associated aileron torque-shaft lever are up.

**6, 7,** and **8** obtain an aileron and main fin and fit the hinge slots on the leading edge of the aileron into the hinged fittings on the trailing edge of the main fins so that the pin holes in the hinge slots and fittings are alined.

**6** installs the aileron-attaching pin through the hole at the outboard end of the aileron and tightens the pin with a screwdriver.

**6** and **7** position the fin and aileron on the missile so that the attaching lugs are resting over their holes in the propellant section tank joints, the aline-pin seats in the fin base, and the aileron index and shear pins seat in the holes in the aileron torque-shaft lever.

**6** and **7** install the four special fin-attach bolts on the two rear main fin-attach lugs. Torque the bolts to 230 to 280 inch-pounds.

**8** installs the two fin-attach bolts in the forward main fin-attach lugs. Torque the bolts to 73 to 100 inch-pounds. Repeat for each main fin and aileron.

**8** removes one set (6) of tank-joint covers, 6 screws, and 6 washers from the cloth bag tied to the missile.

**6, 7,** and **8** install two of the large covers. Position the covers so that the notches ride against the fin-attach fittings, the lips project under the edges of the fin, and the covers fit flush over the joint. Moistening the beveled edges of the covers will facilitate slipping them under the fin gasket. Secure each cover in place with one of the screws and washers.

**1** fastens the one small cover (with the ⅝-inch

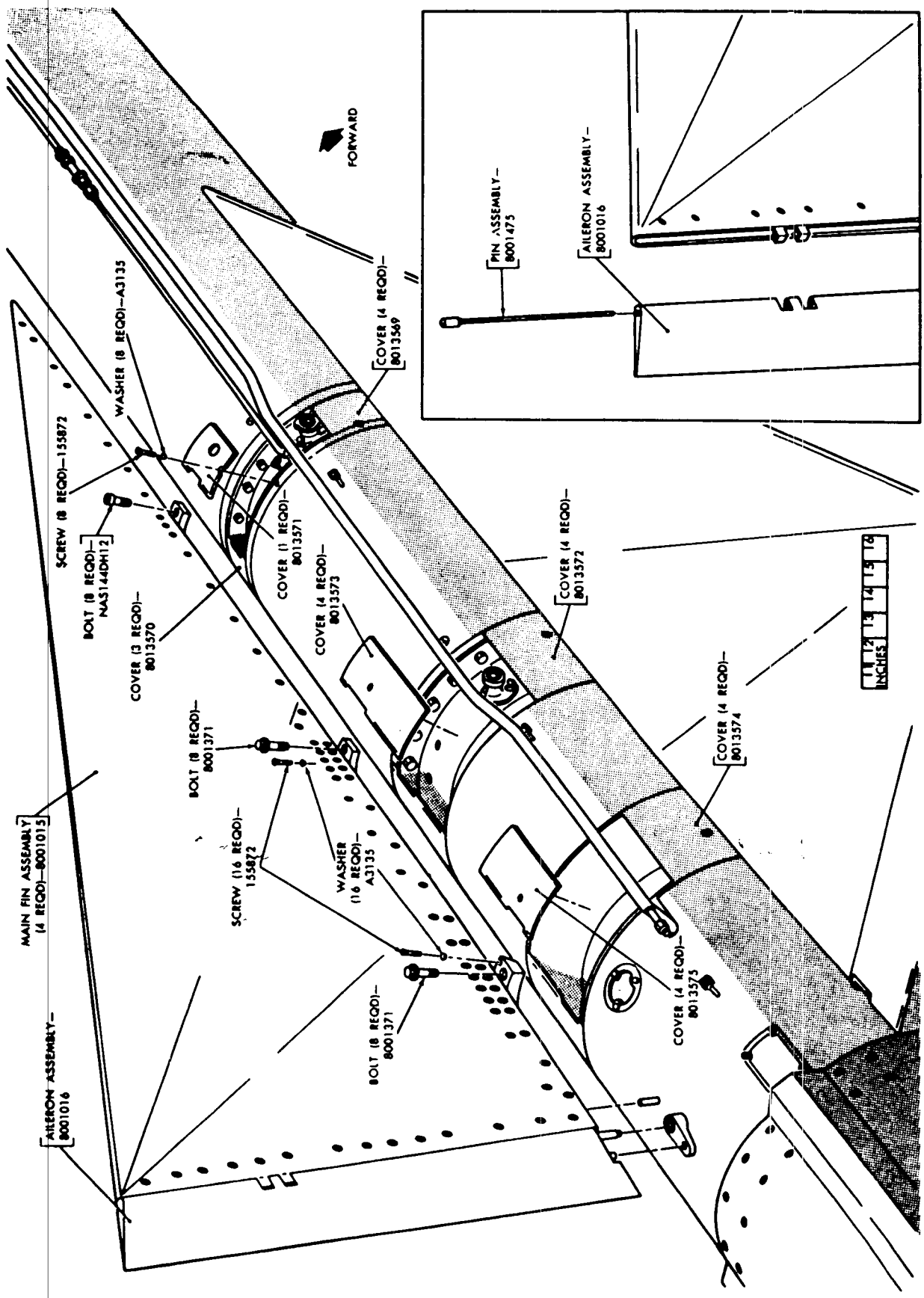


*Figure 155. Installation of main fins and ailerons.*

hole in the red spot) over the fuel vent to the left of tunnel number 1.

1 checks the mechanical alinement of the ailerons by centering one aileron on the center scribe mark and checking to make sure that the other ailerons are centered on their respective center scribe marks.

*c. Control Fins* (fig. 156). The control fins must be properly centered after they are installed and before they are completely tightened in position.

1 will make the adjustment using the potentiometer centering bridge prior to the final tightening.

8 places a control fin, with the tapered leading edge forward, on the end of a control fin torque shaft on the steering fin control section.

8 installs and tightens the four cadmium plated steel bolts in the four holes on the base of the fin. The bolts are in the shipping bag kit attached to a torque shaft lever in the aileron control section.

8 rotates the missile 180° and installs the opposite control fin. DO NOT TIGHTEN ANY OF THE BOLTS.

1 removes the first (bottom) fin until the centering bridge is balanced. 8 alines the top fin to the center scribe mark and torques the bolts to 73 to 100 inch-pounds. 1 insures the centering bridge remains balanced during the tightening of the bolts.

1 and 8 rotate the missile 180°.

While 1 holds the bottom fin at the scribe mark, 8 loosens the top fin, sets the fin at the center scribe mark, and torques the bolts to 73 to 100 inch-pounds.

1 and 8 rotate the missile 90° and install the other two fins following the same procedure.

*d. Completion.* After all the fins and ailerons have been attached, **6, 7,** and **8** move the missile (on the dolly) to the test and pressurization area.

## 238. Missile High Pressure Check

(figs. 157a and 157b)

1 inspects the filler valve O-rings. If they are damaged, he replaces them.

2 installs the hydraulic arming lanyard.

1 makes sure that the overboard dump port is open and the pressure system is closed.

1 applies 50 psi of air through the test fitting at the aft end of the air line in tunnel number 1. Use the stagnation air pressure pump and fittings provided.

1 applies a soap solution to the line from the regulator outlet to the Y-fitting and from the Y-fitting aft along the fuel air line and observes for bubbles. No leakage is allowed.

1. 1 inserts the plunger in the air-filler fitting into the missile air-fill valve until he can tighten the plunger safety nut. The plunger should not be inserted all the way at this time.

2. 4 opens the No. 9 valve on the capping compressor.

***Caution:*** There must be no kinks or sharp bends in the high-pressure air hose. Weight the air hose down with sand bags.

3. 1 pushes the filler plunger into the missile air-fill valve as far as possible, opens the hose air valve and manually holds the filler plunger in the IN position until the pressure in the air tank reaches approximately 1,000 psi as read on the air pressure gage on the missile aileron control section. Do not rely on the pressure gage on the capping compressor. After the pressure in the missile has reached approximately 1,000 psi the air-filler plunger will remain all the way in without being held in by the operator.

4. After the missile gage reads approximately 1,000 psi, 1 closes the hose air valve and checks for air leaks. If there are no leaks, 1 opens the hose air valve and pressurizes the missile to approximately 3,500 psi, or within the yellow line, or that specified by SOP.

5. 1 closes the hose air valve and 4 closes the No. 9 valve on the capping compressor.

1 pulls the air-fill plunger out until it is stopped by the safety nut.

4 drains the high-pressure air from the hose by opening the missile bleed valve on the capping compressor.

1 drains the air between the hose air valve and the end of the plunger by opening the hose air valve.

1 unscrews the safety nut, removes the plunger, and replaces the protective cap over the plunger.

1 checks the complete air-fill system for air

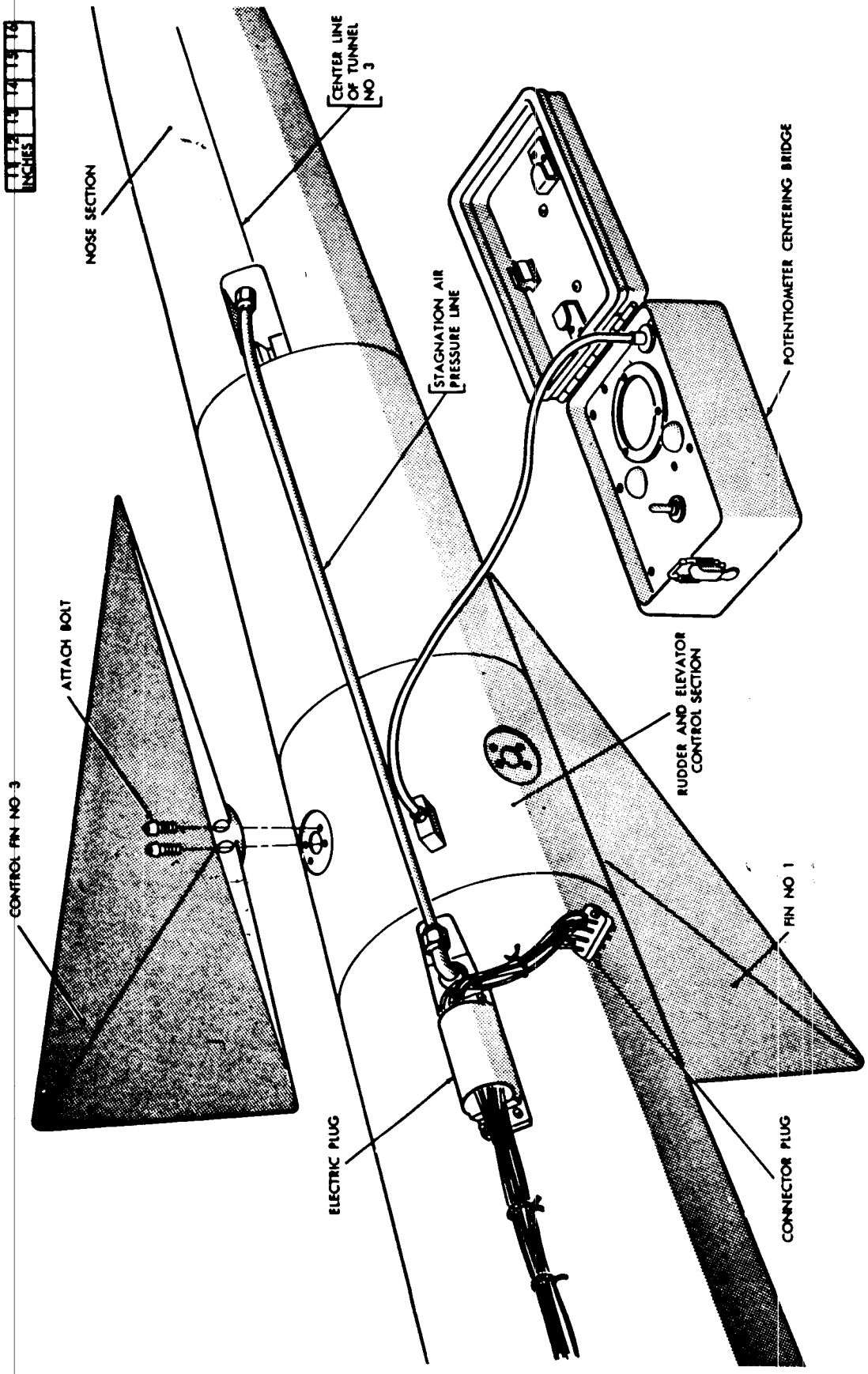


*Figure 156. Attachment and adjustment of control fins.*

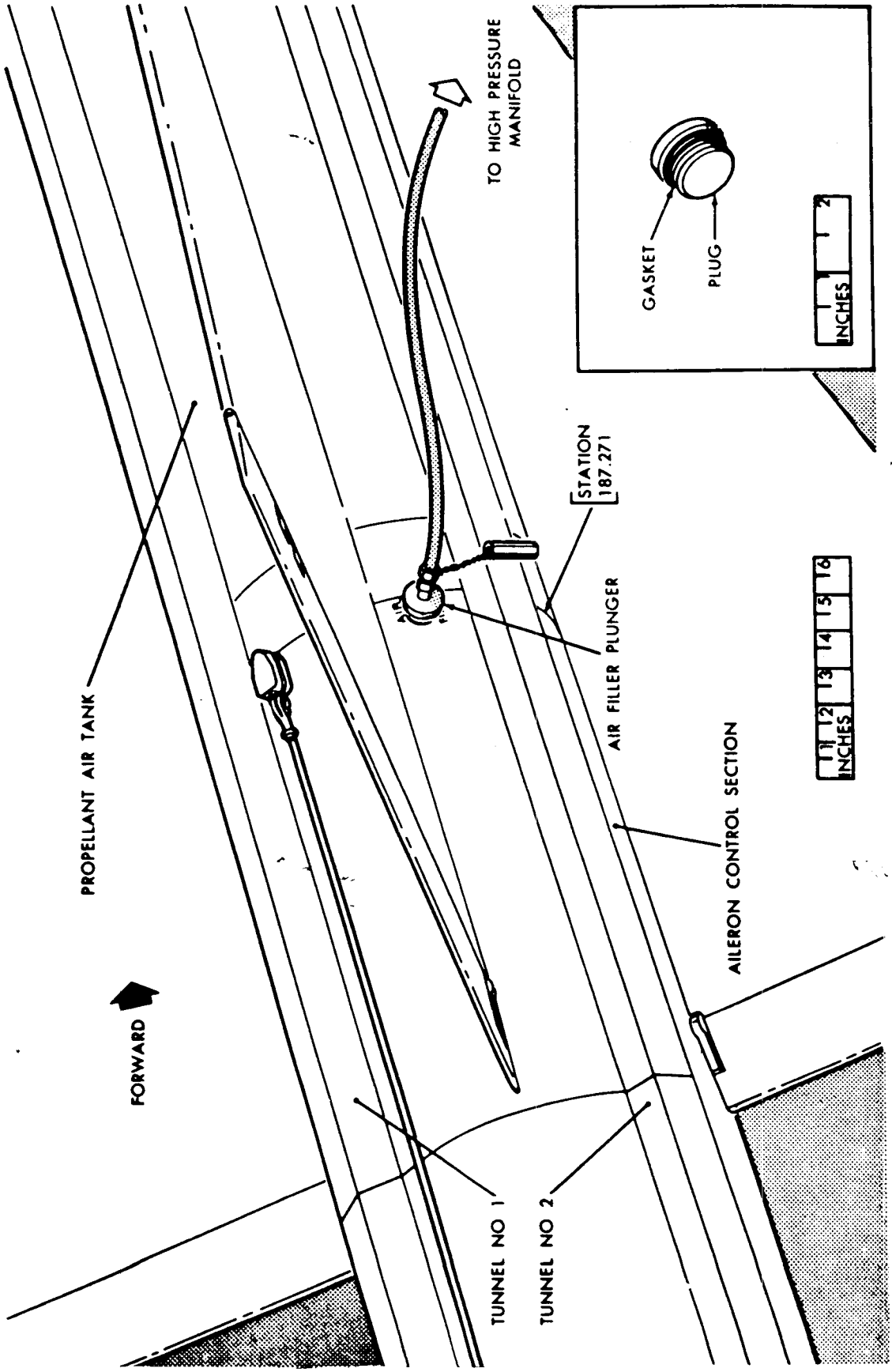


*Figure 157a. Pressurization of missile air-storage tanks.*

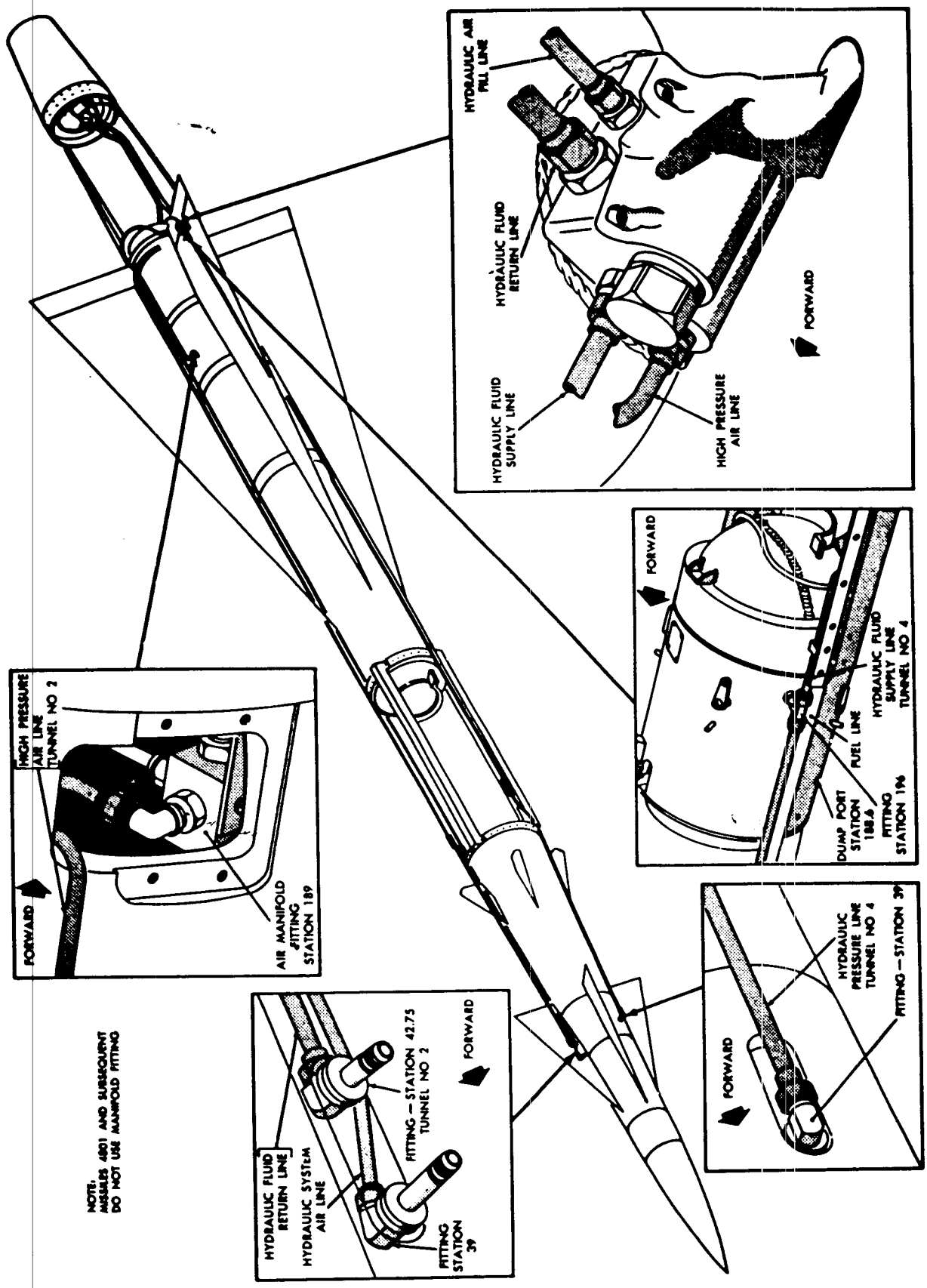


*Figure 157b. High-pressure check points.*

leaks by applying a soapy solution to all connections (fig. 157b).

**1** and **4**, reconnect the high-pressure air line to the missile.

**1** opens the hose valve.

**4** opens the missile bleed valve.

**1** depresses the filler plunger until the air has escaped.

**1** and **4** remove the high-pressure air hose and install the air-filler fitting plug in the missile.

***Caution:*** Extreme care must be exercised when removing the air-filler fitting in order not to damage the airfill valve fitting in the missile.

## 239. Hydraulic System Pressure Check

The hydraulic system must be tested for oil and air leaks.

**4** depresses the STOP button on the hydraulic test stand control panel.

**4** checks the pressure in the accumulator. If necessary, **4** repressurizes the accumulator to 650 (±25) psi.

**4** opens the bypass valve.

**1** removes the rubber plug from the hydraulic port in the aft end of the missile and inserts the quick-disconnect plug from the test stand into the missile hydraulic ground power receptacle. Lock the quick-disconnect plug in place by fastening the lock rod to the handling ring (fig. 158).

**4** depresses the START button on the control panel.

**4** closes the bypass valve.

When the pressure gage on the test stand reads 1,900 psi, **4** depresses the STOP button.

**1** energizes the hydraulic system by pulling the arming lanyard and checks for leaks (fig. 159).

**6** removes the aft warhead section cover while **4** is preparing the test stand.

**4** checks to insure the fins cannot be moved by hand.

**1** observes the lines in tunnel number 1 for oil leaks and paints the air line fittings in tunnel 2 with soapy water and observes for bubbles. No leakage is allowed.

If there are no leaks, **4** depressurizes the hydraulic system by depressing the START pushbutton on the hydraulic test stand. After all the air has escaped, **4** depresses the STOP pushbutton.

**1** reinserts the lanyard in the arming plunger and resets plunger in to its UNARMED position.

**2** installs the safety wire through tunnel No. 3 near the hydraulic ground power plug.

**6** replaces the aft warhead section cover.

## 240. Completed Missile Check

(fig. 160)

**1**, **2**, and **3** check the following in the entire missile system.

*a.* Calibrate electrical checkout equipment.
*b.* Warm up missile system.
*c.* Record missile serial number.
*d.* Record guidance section number.
*e.* Record observer's name.
*f.* Record the date.
*g.* Make a mechanical inspection.
*h.* Check total missile current.
*i.* Check missile power supply voltage levels.
*j.* Check receiver sensitivity.
*k.* Check transmitter power output.
*l.* Check transmitter frequency.
*m.* Check decoder spacing.
*n.* Check response time.
*o.* Check buzz voltage.
*p.* Check gyro-preset system.
*q.* Check precise commands.
*r.* Measure burst time.
*s.* Check fail-safe circuit.
*t.* Check servo inputs.
*u.* Check rate gyros.
*v.* Check pressure pickup.
*w.* Check fin positions.
*x.* Check simulated flight operation.
*y.* Check internal operation.
*z.* Remove external connections.
*aa.* Complete log book entries.

## 241. Reject Missiles

Missiles failing to pass this go-no-go test (complete missile test) will be evacuated to the repair areas. If faults are found that are beyond the scope of organizational maintenance, the missile will be replaced in its container and returned to the appropriate ordnance agency by the battalion S4. When a missile is rejected, **1**, **6**, **7**, and **8** will uncrate another missile. The same procedure for uncrating will apply except it will not be necessary to uncrate another booster.

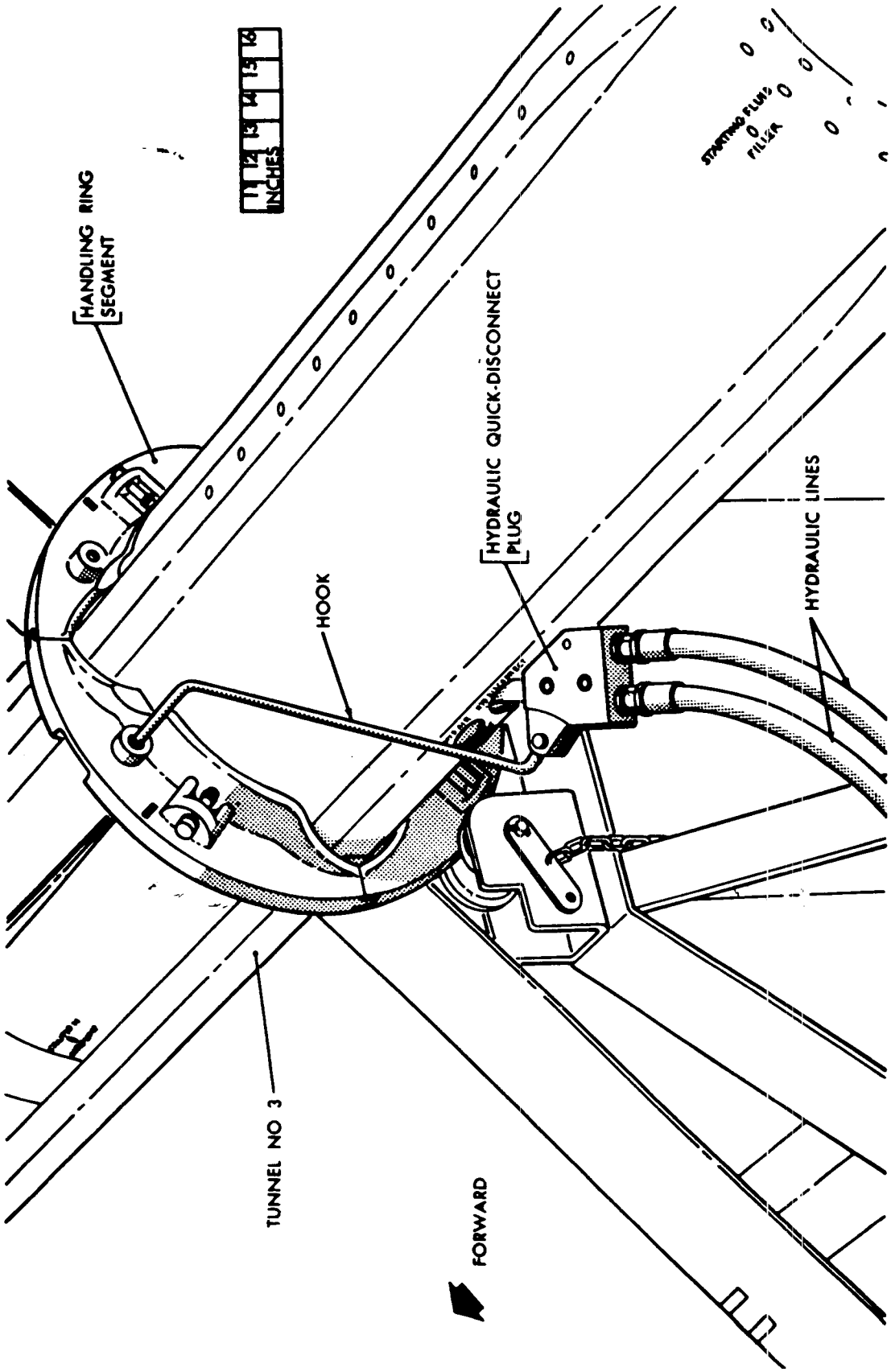


*Figure 158. Attachment of hydraulic quick-disconnect plug.*

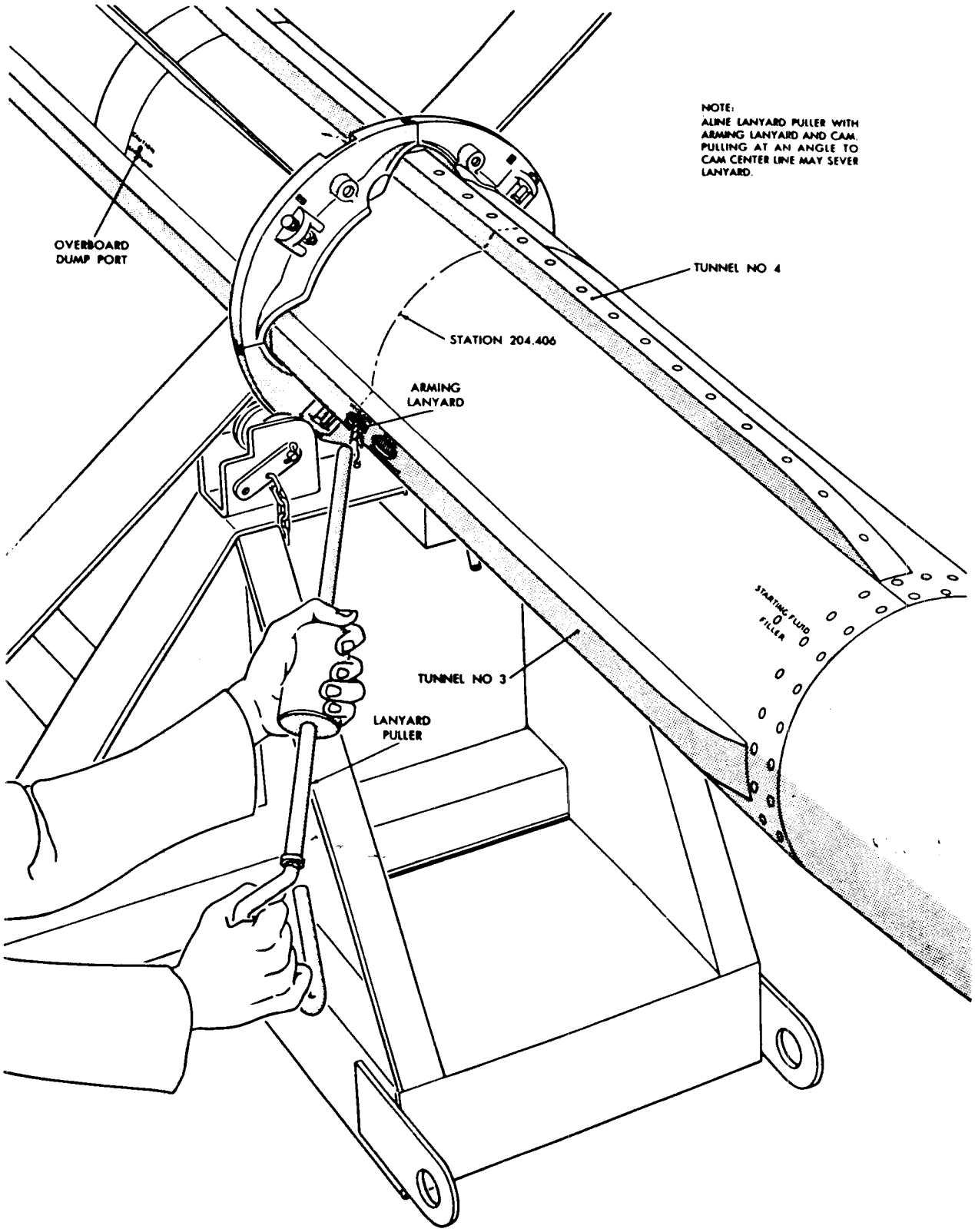


*Figure 159. Energizing the hydraulic system.*

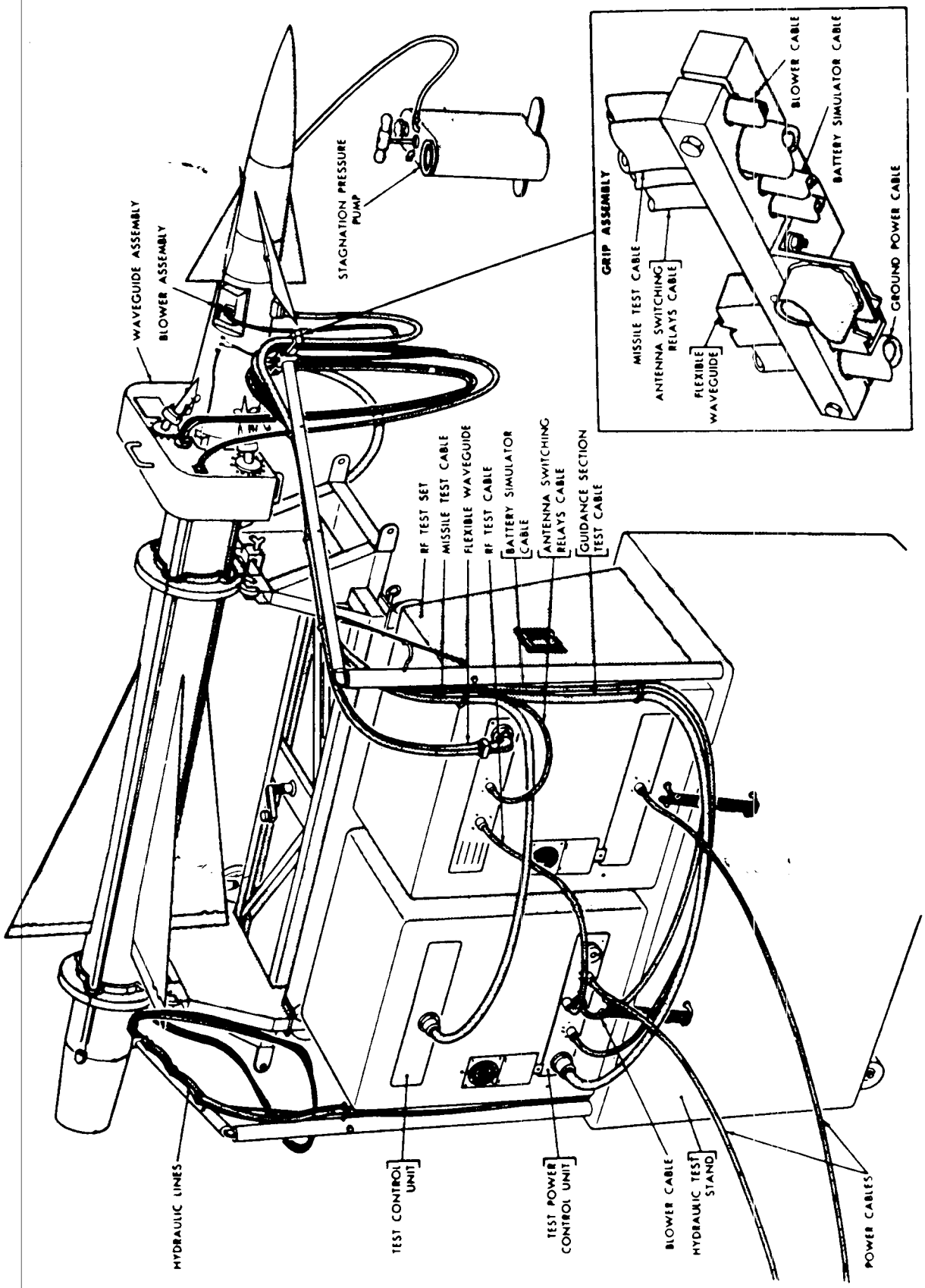


*Figure 160. Completed missile check.*

## 242. Completed Missile Check

*a. Personnel.* The missile checkout procedure requires three men: a crew chief and two crewmen (panel operator and assistant checkout man). The crew chief will act as recorder. The panel operator will connect the missile and test equipment and operate the test equipment during checkout. The assistant will help the panel operator connect the missile and test equipment and perform necessary work on the missile during checkout.

*b. Test Equipment.* The primary function of the test equipment at the assembly area is to ascertain whether a missile is electrically ready to be sent to the launcher. The electrical test equipment used for missile checkout is rugged, portable (for use in making launching area tests), simple to operate, and reliable. It has been designed to meet most environmental conditions of operation, transportation, and storage which might be encountered. The equipment is designed to give an indication of missile operability and is not intended for use in locating specific electrical troubles as far as component testing is concerned. The test equipment required for assembly area type tests is as follows:

(1) Missile hydraulic test stand.
(2) Missile electrical test set.
(3) Missile rf test set.
(4) Stagnation pressure pump.
(5) Missile dolly.
(6) Guidance section blower.

# Section III. CHECK

## 243. Test Equipment Preparation

*a. Missile Hydraulic Test Stand.*

(1) *Use.* The Missile Hydraulic Test Stand provides hydraulic pressure for testing a missile and is used to fill the hydraulic accumulator in the missile. It is used as a stand for the rf test set and electrical test set. The two booms fastened to the test stand are used as supports for all cables and lines between the test equipment and the missile.

(2) *Connections.*

(*a*) Connect the ac power cable, stored in the ELECTRIC EXTENSION CORD compartment at the end of the test stand, to a 220/440V, 3-phase, 60-cycle power source.

(*b*) Feed the two hydraulic lines through the support hooks on the hydraulic hose support boom.

(*c*) Connect the pressure and return hydraulic lines to the fittings on the right rear top of test stand. Observe the flow indications marked on the side of the hoses.

(*d*) Install the quick-disconnect plug on the hydraulic hose lines. Observe the flow indications on the hose lines and the plug.

(*e*) Torque all hydraulic connections to $285 \pm 15$ inch-pounds.

(3) *Operation.* The missile hydraulic test stand will be operated when specified in the missile checkout procedure.

***Caution:*** Insure that the quick-disconnect plug is properly secured to a missile before energizing the test stand and closing the BYPASS VALVE.

(*a*) Energize the test stand pump motor by depressing the MOTOR SWITCH START pushbutton.

(*b*) Close the BYPASS VALVE (turned fully clockwise).

(*c*) With the BYPASS VALVE closed, pressure is automatically regulated between 1,750 and 1,950 psi.

(*d*) Depress the STOP pushbutton to turn off the test stand when required during tests. On completion of missile checkout, open the BYPASS VALVE (fully counterclockwise) and depress the STOP pushbutton.

(*e*) Should the circuit breaker within the test stand open during an overload, the RESET pushbutton must be depressed to reset the circuit breaker.

*b. Missile Electrical Test Set.*

(1) *Use.* The electrical test set consists of the test control unit (upper drawer), the test power control unit (lower drawer), and associated cables. The test control unit provides a means of checking the missile power supply voltages and guidance servo operation. The test power control unit provides power for the missile under test and provides a means for preset operation of the roll position gyro.

(2) *Connections.*

(*a*) *Preparation.* Place the electrical test set on the top of the missile hydraulic test stand. Insure that all controls and switches on the test power control unit are in the OFF or neutral position.

(*b*) *Test power control unit (TPCU).*

*1.* Connect the battery simulator cable, the ground power cable, and the guidance section blower cable to the boom on the hydraulic test stand.

*2.* Connect the battery simulator cable to the receptacle on the rear labeled J1.

*3.* Connect the ground power cable to the receptacle on the rear labeled J2.

*4.* Connect the guidance section blower cable to receptacle J12.

*5.* Connect the ac power cable to the receptacle on the rear labeled J5 and to a 120-volt, 400-cycle source.

*6.* Connect the rf test cable (jumper cable) to receptacle J6.

(*c*) *Test control unit (TCU).*

*1.* Connect the missile test cable to the test stand boom.

*2.* Connect the missile test cable to J8 on the rear of the TCU.

(3) *Operation.*

(*a*) All controls and switches on the TCU and TPCU, except the AC POWER switch, function directly with the missile under test. Their operation will be mentioned when applicable in the missile checkout procedure.

(*b*) When required, place the AC POWER (TPCU) switch to the ON position.

*c. Missile RF Test Set.*

(1) *Use.* The missile rf test set consists of the cabinet assembly (upper and lower drawers), the antenna saddle, and associated waveguide and cables. The test set generally simulates the missile-tracking radar by supplying commands to the missile under test. In addition, it provides means of testing various portions and functions of the guidance unit. It contains its own calibration circuits.

(2) *Connections.*

(*a*) Place the missile rf test set on top of the missile hydraulic test stand.

(*b*) Connect the ac power cable to the receptacle on the rear of the set designated 120V, 400-cycles, and to a 120V, 400-cycle power source.

(*c*) Secure the 28V switch attenuator control cable and the flexible waveguide to the missile hydraulic test stand boom.

(*d*) Connect 28V switch attenuator control cable to the receptacle designated WAVEGUIDE ASSEMBLY and to the connector designated J12 on the antenna saddle.

(*e*) Connect the flexible waveguide L-connector to the receptacle on the rear of the upper drawer. When the guide pins on the flange have been matched to the corresponding holes on the L-connector, turn the waveguide clamp holder until the waveguide is securely connected. Be sure the test receptacle matches the flexible waveguide and is not turned 90° out of alinement. The flexible waveguide need not be connected to the antenna saddle until the saddle has been placed on the missile.

(*f*) Connect the rf test cable (jumper cable) from the TPCU to the receptacle on the upper drawer designated BURST INDICATION.

(3) *Rf test set calibration.* Calibrate the rf test set as shown below. The indication column shows the proper indication or response for each step where applicable. In steps 4*b*, *c*, *d*, *e*, *f*, and *g*, it may not be possible to obtain a stationary pattern on earlier models of the test set. If so, observe the scope for a slow-moving lissajous pattern.

| Step | Operation | Indication |
|---|---|---|
| 1 | POWER ON: | |
| | *a.* Turn the AC POWER switch to ON | POWER ON light illuminates. Blower operates. |
| | *b.* Place the TEST SELECTOR switch to RF TEST SIG position. | |
| 2 | PLUS 300 VOLT POWER SUPPLY CALIBRATION: | |
| | *a.* Turn the PWR METER CAL switch to ADJ V position | |
| | *b.* Observe the RF POWER meter and adjust the CAL V control | RF POWER meter reads to V position. |
| 3 | MINUS 250-VOLT POWER SUPPLY CALIBRATION: | |
| | *a.* Hold the RESPONSE −250V switch in the −250V position (down). | |
| | *b.* Observe the RESPONSE OR VOLTAGE meter and adjust the ADJ −250V screwdriver control. | RESPONSE OR VOLTAGE meter reads to the ADJ VOLTS position. |
| 4 | COMMAND CIRCUITS CALIBRATION. (Adjust BRIGHTNESS control as required.) Balance the CAL meter before proceeding. | |
| | *a. Balance.* (Turn BRIGHTNESS control fully counterclockwise on GS 15636 models for this step.) | |
| | (1) Turn the COMMAND CAL switch to BAL position | |
| | (2) Adjust the BAL screwdriver adjustment to balance the CAL meter. | CAL meter reads 0 or center position. |
| | *b. 2,000 Cycles:* | |
| | (1) Turn COMMAND CAL switch to 2,000~position | |
| | (2) Adjust the 2,000~screwdriver adjustment and observe the oscilloscope. | Single standing lissajous pattern. |
| | *c. 1,600 Cycles:* | |
| | (1) Turn COMMAND CAL switch to 1,600~position | |
| | (2) Adjust the 1,600~screwdriver adjustment and observe the oscilloscope. | Single standing lissajous pattern. |
| | *d. 2,400 Cycles:* | |
| | (1) Turn COMMAND CAL switch to 2,400~position | |
| | (2) Adjust the 2,400~screwdriver adjustment and observe the oscilloscope. | Single standing lissajous pattern. |
| | *Note.* Repeat steps above until a satisfactory pattern is obtained in all positions. | |
| | *e. Yaw Oscillator:* | |
| | (1) Turn COMMAND CAL switch to YAW position | |
| | (2) Turn the YAW COMMAND switch to OG position | |
| | (3) Adjust the YAW screwdriver adjustment for a balance indication on the CAL meter. | CAL meter reads 0 or center position. |
| | (4) Observe the oscilloscope | Single standing lissajous pattern. |
| | *Note.* In steps *e*, *f*, and *g*, if the proper pattern does not appear on the oscilloscope, the test set requires internal adjustment. This is not a part of normal calibration. | |
| | *f. Pitch Oscillator:* | |
| | (1) Turn COMMAND CAL switch to PITCH position | |
| | (2) Turn the PITCH COMMAND switch to OG position. | |
| | (3) Adjust the PITCH screwdriver adjustment for a balance indication on the CAL meter. | CAL meter reads 0 or center position. |
| | (4) Observe the oscilloscope | Single standing lissajous pattern. |
| | *g. Burst Oscillator:* | |
| | (1) Turn COMMAND CAL switch to BURST position. | |
| | (2) Adjust the BURST screwdriver adjustment for a balance indication on the CAL meter. | CAL meter reads 0 or center position. |
| | (3) Observe the oscilloscope | Single standing lissajous pattern. |
| | *h. Time Adjustment (microsecond oscillator):* | |
| | (1) Turn COMMAND CAL switch to TIME position. | |
| | (2) Set TIME-MICROSECONDS dials to the units value nearest the code interval of the missile under test. | |
| | (3) Adjust the TIME screwdriver adjustment and observe the oscilloscope. | Momentary single standing lissajous pattern. |

| Step | Operation | Indication |
|---|---|---|
| 4 | COMMAND CIRCUITS CALIBRATION—Continued. | |
| | *i. Measure Position.* Turn COMMAND CAL switch to MEAS position. (BRIGHTNESS control must be turned fully counterclockwise on GS 15636 models.) | |
| 5 | RF POWER MEASURING CIRCUIT CALIBRATION: | |
| | *a. Adjust Infinity:* | |
| | (1) Turn PWR METER CAL switch to ADJ ∞ position. | |
| | (2) Adjust the CAL ∞ control and observe RF POWER meter | RF POWER meter reads as near ∞ mark as possible. |
| | *b. Adjust Zero:* | |
| | (1) Turn PWR METER CAL switch to ADJ 0 position. | |
| | (2) Adjust the CAL 0 control and observe the RF POWER meter | RF POWER meter reads 0. |
| | *c. Measure Position:* | |
| | (1) Set ATTEN DB control to approximately 20 to avoid pegging meter. | |
| | (2) Place PWR METER CAL switch to MEAS position. | |
| 6 | RF SIGNAL GENERATOR CALIBRATION: | |
| | *a. Maximum Power Adjustment:* | |
| | (1) Set the TIME-MICROSECONDS dial to 0000. | |
| | (2) Adjust the REPELLER control and observe the RF POWER meter. (Use ATTEN DB control to keep reading on scale.) | Maximum reading attainable on RF POWER meter. |
| | *b. Frequency Check and Calibration. (Recheck ∞ and 0 Positions):* | |
| | (1) Adjust the MEAS FREQ control and observe RF POWER meter. | Maximum dip to left by RF POWER meter needle. |
| | (2) Read the setting of the frequency dial. | |
| | (3) Determine the frequency from the chart located just below the MEAS FREQ control. | Frequency must be that assigned ± 50 mc. |
| | (4) Detune the frequency meter by turning the MEAS FREQ control at least three turns in either direction. | Increases reading on RF POWER meter. |
| | *Note.* If the frequency is not within tolerance, it must be adjusted as follows: Having checked the frequency, the RF POWER meter should be indicating a maximum dip to the left. Turn the RF TEST SIG FREQ knob in the desired direction (clockwise rotation of the FREQ knob lowers the frequency). Adjust the REPELLER knob (track) to obtain maximum rf power at the new frequency setting. Remeasure the frequency, using the MEAS FREQ control. The RF POWER meter will again indicate a maximum dip to the left. Repeat this procedure until the rf test set transmitter frequency is within tolerance. Detune the frequency meter. | |
| | *c. Power Output Calibration:* | |
| | (1) Set TIME-MICROSECONDS dials to 0400. | |
| | (2) Set ATTEN DB dial to 0. | |
| | (3) Adjust the RF TEST SIG OUTPUT control. | RF POWER meter reads to 0 point. |

*d. Stagnation Pressure Pump.*

(1) *Use.* The stagnation pressure pump provides a means of supplying either a vacuum or pressure to the missile pressure potentiometer.

(2) *Connections.* Connect the pump hose to the missile pressure potentiometer feed line.

(3) *Operation (when required during checkout).*

(*a*) Open the VENT on the top of the pump.

(*b*) Turn the selector knob to VACUUM or PRESSURE as required.

(*c*) Operate the pump manually and observe the gage for the desired reading.

*e. Missile Dolly.* The missile dolly supports the assembled missile.

*f. Guidance Section Blower.*

(1) *Use.* Operating from 120-volt, 400-cycle source, the blower supplies forced air for cooling the guidance unit during checkout.

(2) *Connection.* Connect the ac power cable to the receptacle on top of the guidance

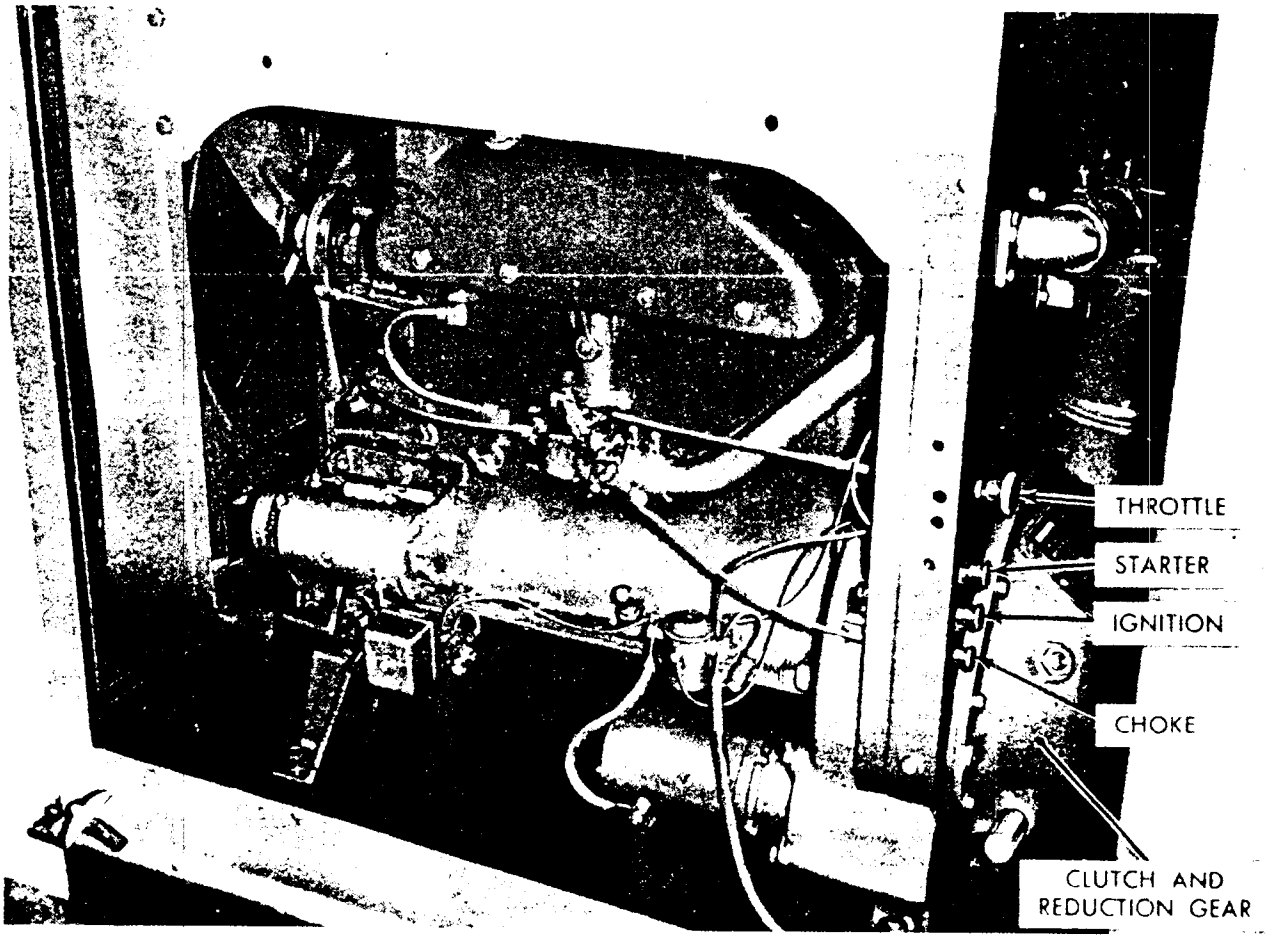


*Figure 161. Engine controls.*

section blower. Connection is made to the TPCU for a power source.

(3) *Operation (as required).* Place the ac power switch to ON position.

*g. Capping Compressor* (figs. 93 and 94).

(1) *Responsibility.* The air compressor operator is responsible for the operation, care, and maintenance of the capping compressor. The capping compressor will be operated by a licensed operator only.

(2) *Starting the compressor engine* (fig. 161).

(*a*) The compressor should be as level as possible.

(*b*) Check the oil, gas, water, oil filter, and battery. Service as needed.

(*c*) Open the valve in the fuel line to allow fuel to flow into the carburetor.

(*d*) Make sure the compressor clutch is disengaged.

(*e*) Pull the throttle approximately one-fourth of the way out.

(*f*) Depress the starter pushbutton. Choke as required to start the engine.

(*g*) After the engine starts, allow it to idle until warm. Then raise the sliding radiator vent.

(3) *Starting the compressor* (fig. 163).

(*a*) Check the oil level in the crankcase. Service as required.

(*b*) Check the oil level in the mechanical oiler (fig. 162). Fill if required. The mechanical oiler holds 6 pints of oil

(*c*) Check the water in the compressor radiator.

(*d*) Check the fan belt.

(*e*) Insure the engine is properly warmed up.

(*f*) Check to make sure the DRYER, BLOWER, and HEATER switches are OFF.

(*g*) Close all valves in the system *except* the 3 air bleeder valves in the 2 intercoolers and the aftercooler and the

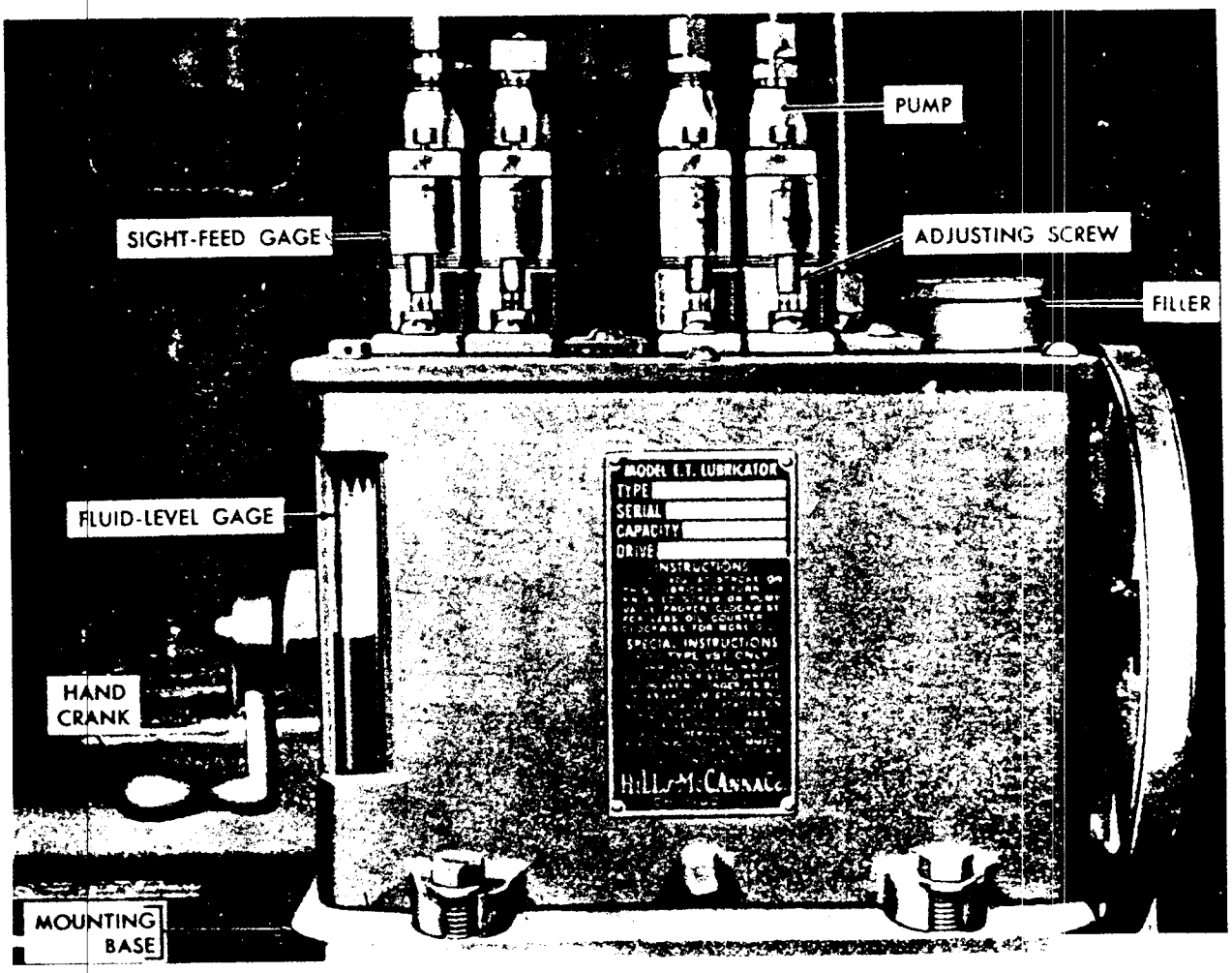


*Figure 162. Mechanical oiler.*

No. 10 valve at the bottom of the prefilter (fig. 163).

(*h*) Start the compressor by pushing the clutch lever to its engaged (toward the compressor) position.

(*i*) Insure that the mechanical oiler on the compressor is functioning.

***Caution:*** At no time during operation should the rate of oil flow from the oiler exceed that rate specified on or near the sight gage. Too much oil will cause the compressor to overheat.

(*j*) Allow the compressor to run with the bleeder and the No. 10 valves open to blow out any oil or moisture vapor in the airflow channels (approximately 10 minutes).

(*k*) Close the three bleeder valves on the intercoolers and the after cooler in the following order, making sure all oil and moisture is blown out before closing: first-stage intercooler, second-stage intercooler, and aftercooler.

(*l*) To put drier No. 1 into operation, make sure valves 1 through 9 are securely closed. **Valves must be opened and closed slowly to insure pressure in the driers is built up or reduced slowly. Sudden changes in pressure may cause the activated alumina in the driers to powder.**

(*m*) Open valve No. 1, slowly close Valve No. 10 until the air pressure in drier No. 1 has built up to 2,000 psi as read on the No. 1 drier gage. Allow the compressor to operate at 2,000 psi for approximately 10 minutes.

(*n*) Close valve No. 10.

(*o*) Open valve No. 3 slightly until the reading on the final pressure and No. 1

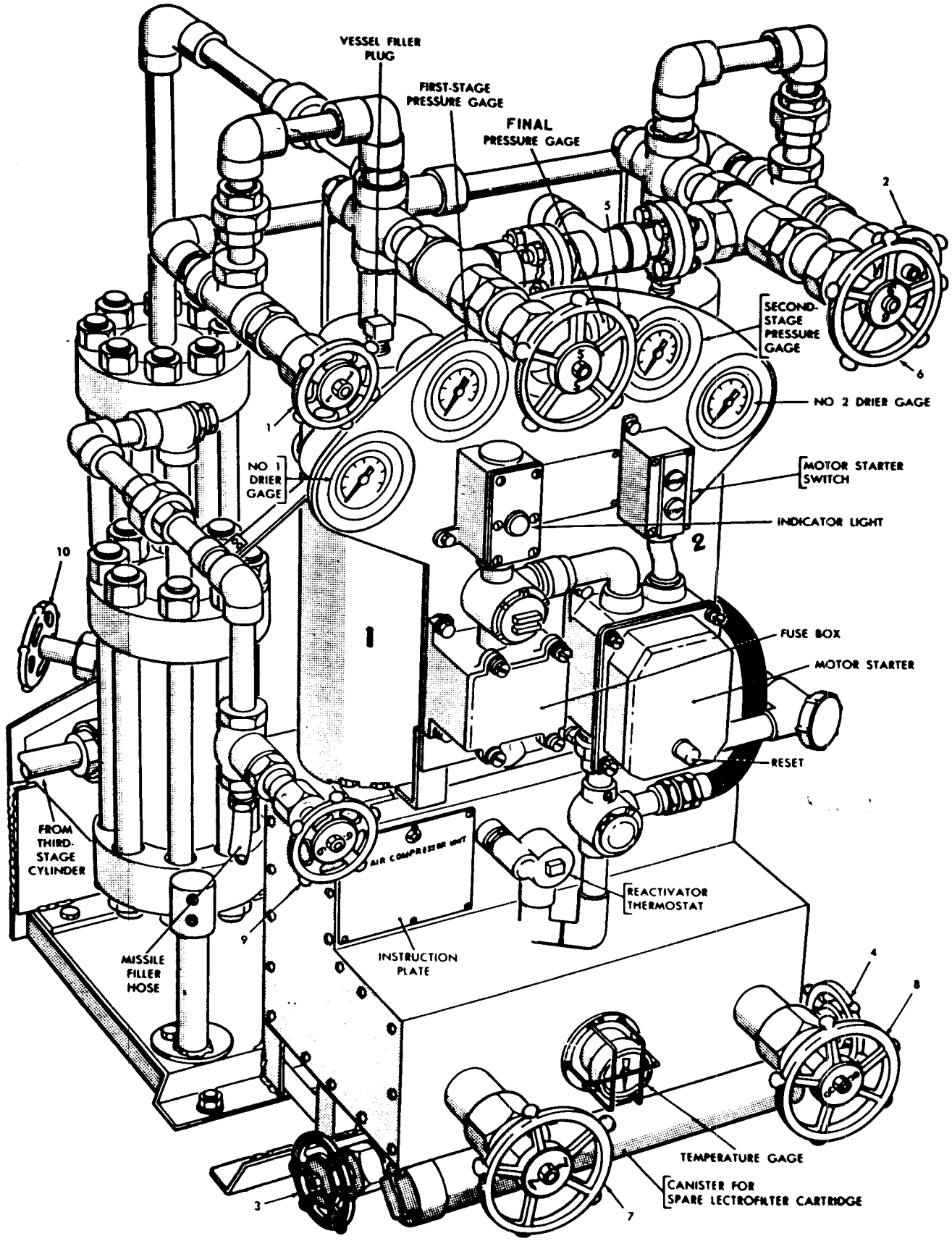


*Figure 163. Compressor controls.*

drier gages are the same. After the gages read the same, open valve No. 3 completely.

(*p*) If valve No. 9 is now opened, high-pressure air will flow to the flexible high-pressure hose used to fill the missile. **Do not open valve No. 9 until the high-pressure hose has been connected to the missile.**

(4) *Shutting down the compressor and engine.*

(*a*) Close valve No. 9 and the valve in the missile end of the flexible hose.

(*b*) Disengage the compressor from the engine by disengaging the clutch.

(*c*) Adjust the throttle so the engine will idle.

(*d*) **Gradually** open the missile bleed valve and then the hose valve to release the air trapped in the flexible hose and the air-filler fitting.

(*e*) Crack valve No. 10 and SLOWLY bleed down the pressure in the system.

(*f*) After the pressure is released, close all valves except valve No. 10.

(*g*) Stop the engine by holding the magneto switch in until the engine stops.

(*h*) Turn off the gasoline at the strainer valve on the bottom of the gasoline tank.

(5) *Changing and reactivating driers.*

(*a*) Assume drier No. 1 has been in service and has become almost saturated with moisture, and that drier No. 2 is to be placed in service and drier No. 1 reactivated.

(*b*) Open valve No. 2 slowly and gradually build up the pressure in drier No. 2.

(*c*) After the pressure had built up (No. 2 drier gage), open valve No. 2 completely.

(*d*) Open valve No. 4 slowly. Driers Nos. 1 and 2 are now both in use.

(*e*) Close valves No. 1 and 3 slowly. Drier No. 1 is now out of the high-pressure flow.

(*f*) Open valve No. 5 *very slowly* to bleed drier No. 1 down to atmospheric pressure.

(*g*) Completely open valve No. 5.

(*h*) Open valve No. 7.

(*i*) Start the reactivator motor and pump by depressing the STARTER push-button. The red indicator light should come on. The heater will be energized.

(*j*) Make sure air is flowing from the reactivator air outlet.

(*k*) Observe the reactivator temperature gage. The maximum temperature of the air leaving the heater will be approximately 450° F. This temperature will not be reached until 30 to 60 minutes after the start of reactivation.

(*l*) Four hours of continuous operation are required for complete reactivation. When the temperature of the reactivation air exhaust levels off (160° to 180° F.), reactivation is complete. The maximum and final temperatures as well as the time required will vary due to such things as atmospheric conditions.

(*m*) When reactivation is complete, stop the reactivator motor and pump by depressing the STOP pushbutton.

(*n*) Close valves Nos. 5 and 7. Allow the drier to cool to outside temperature. This will require approximately 4 hours

(*o*) To put drier No. 1 into the airflow and reactivate drier No. 2, repeat (*b*) through (*n*) above, substituting valve No. 1 for No. 2, 3 for 4, 6 for 5, and 8 for 7.

## 244. Missile Preparation

*a.* The crew chief records the guidance section number, missile serial number, date of test, and rf test set number on the check sheet (par. 296).

*b.* The panel operator and assistant makes a visual inspection for any damage to the missile, such as damaged receptacles, antennas, and fittings. Do not remove the guidance unit for inspection.

*c.* Remove and retain for reinstallation the forward section of tunnels Nos. 1, 2, and 3.

*d.* Disconnect the pressure potentiometer feed line fitting located in tunnel No. 3 unless adapter is available.

*e.* Connect the hose of the stagnation pressure pump to the pressure potentiometer feed line fitting. If the adapter is available, attach to the nose of the missile.

*f.* Remove the battery box by removing the four screws and lifting the box out of the missile, if not previously removed.

*g.* Insert the guidance section blower in the battery hatch and secure it with the four captive screws.

*h.* Remove the screw-type plugs in the guidance unit casting ports marked R, RY, CSG-RBZ, PBZ, and YBZ. Retain the plugs for reinstallation.

*i.* On missiles with serial number 4,400 and above the ports are labeled R, P, and Y. Both the buzz voltage and amplifier adjustments are reached through these ports. The front adjustment is for buzz voltage, the rear for amplifier adjustments. On missiles below 4,400 there are separate ports marked P, RY, CSG, RBZ, PBZ, and YBZ.

*j.* Place the missile in the normal test position (No. 1 fin up).

*k.* Place the antenna saddle, open section down, on the missile.

*l.* Fasten the antenna couplers by means of the spring clamps over the antenna horns Nos. 1, 2 and 4. (The center coupler must be fitted to antenna No. 1.)

*m.* Fasten the clamp of the antenna saddle securely around the missile.

*n.* Attach the antenna termination by means of its spring clamp to antenna No. 3. The antenna termination is found in the compartment built into the antenna saddle.

*o.* Lock the separation switch in the depressed position with the separation switch holddown fitting.

*p.* **Clean all plugs and receptacles to insure that the contacts are free of all foreign matter. This is imperative since a poor connection will cause improper results.**

*q.* Fasten the flexible waveguide to the antenna saddle. When the guide pins in the flange are matched to the holes in the waveguide coupler, turn the waveguide clamp holder until the waveguide is securely connected. Insure that the longitudinal axis of the flexible waveguide is matched to the longitudinal axis of the antenna saddle flange.

*r.* Insure that the 28-volt control cable is connected to the antenna saddle.

*s.* Attach the guidance section blower cable to the blower.

*t.* Attach the ground power cable from the TPCU to the missile ground power receptacle (tunnel No. 3). Fasten the strap securely around the missile body and tighten the locking screw on the power cable plug. This connection must be secure so as not to loosen with movement of the missile.

***Caution:*** Observe correct polarity in making this connection.

*u.* Connect the missile test cable to the plug designated JE-2 TST on the guidance section casting (tunnel No. 2) with the captive screw.

*v.* Connect the battery simulator cable to the battery terminals on the missile (tunnel No. 1).

***Caution:*** Observe correct polarity when connecting the battery simulator cable to the missile.

*w.* Insert the hydraulic test stand quick-disconnect plug into the missile hydraulic ground power receptacle and secure the safety screw to the missile aft handling ring.

## 245. Checkout Procedure

| Step | Operation | Indication |
|---|---|---|
| 1 | POWER ON: | |
| | *a.* RF TEST SET: | |
| | (1) Turn the AC POWER switch on. Allow at least 15 minutes warmup. | Red POWER ON light illuminates. Blower operates |
| | (2) Calibrate the rf test set (par. 243). | |
| | *b.* Turn the guidance section blower ac ON-OFF switch to ON. | |
| 2 | TEST POWER CONTROL UNIT: | |
| | *a.* Turn the AC POWER switch to ON. Ascertain that the test equipment blower is on and that the air inlet door in the rear of the cabinet is open. | White AC POWER light illuminates. Blowers operate. (Check guidance section blower.) |
| | ***Caution:*** If the uncage IND light glows, immediately operate GYRO CAGE-UNCAGE switch to CAGE. | |
| | *b.* Turn HEATERS EXTERNAL switch to ON. (38 ±3 second-timer starts rundown.) | Red HEATERS EXTERNAL light illuminates. |
| | *c.* Check to see that the MISSILE VOLTAGE and MISSILE CURRENT meters are within tolerance. | MISSILE VOLTAGE READS 100 percent ±10 percent. MISSILE CURRENT reads 40 to 50 percent. |
| | *d.* Turn VIBRATOR EXTERNAL switch to ON. After 38-second timer runs down. | Red VIBRATORS EXTERNAL light illuminates. MISSILE CURRENT meter reads 100 percent ±10 percent. |
| | *e.* Turn GYRO CAGE-UNCAGE switch to UNCAGE position | Red UNCAGE IND light illuminates. |
| 3 | GUIDANCE UNIT POWER SUPPLY VOLTAGE. Performed with Test Control Unit. All equipment in previous operating condition. | |
| | *a.* Depress VOLTAGE SELECTOR pushbuttons as indicated below. Read VOLTAGE meter during (1) through (6) below. | |
| | (1) 230 | 100 percent ±10 percent. |
| | (2) 300 | 100 percent ±10 percent. |
| | (3) STRG PLATE: | |
| | Missiles with guidance unit model No. GS-15660 | 100 percent ±10 percent. |
| | Missiles with guidance unit model No. GS-17120 and GS-16725 | 96 percent ±10 percent. |
| | (4) 150 | 100 percent ±10 percent. |
| | (5) CONT SIG | Guidance units Model No. GS-15660, 100 ±10 percent; GS-17120 and GS-16725, adjust to 100 percent. |
| | (6) FIN VOLT | 25 percent to 50 percent at 5,000 feet altitude. Decreases 1 percent for each 1,000 feet above 5,000 feet. |
| | *b.* Depress SERVO TEST SELECTOR pushbuttons as indicated below. Read SERVO meter with METER SENSITIVITY pushbutton depressed during (1) and (2) below. | |
| | (1) STRG PLATE BAL | 0 percent ±10 percent. |
| | (2) CONT SIG BAL | Guidance units Model No. GS-16725, adjust to 0; GS-17120 and GS-15660, 100 ±10 percent. |
| | *Note.* If control signal balance reading is incorrect, it must be adjusted by turning the screwdriver adjustment reached through the port marked CSG in the guidance section casting. | |
| 4 | RECEIVER SENSITIVITY TESTS. Performed on the rf test set. All equipment in operating condition. | |
| | *a.* Turn the TEST SELECTOR switch to REC SENS position. | |
| | *b.* Set the TIME-MICROSECONDS dials to the code of the missile under test plus 0.1 u/second. | |
| | *c.* Antenna No. 2: | |
| | (1) Place ANT 2-ANT 4 switch to ANT 2 position. | |
| | (2) Turn RESPONSE control fully counterclockwise. | |
| | (3) Turn ATTEN DB control adjustment to 0 db. | |
| | (4) Adjust RESPONSE CONTROL until RESPONSE of VOLTAGE meter reads approximately ¾ scale. | |

| Step | Operation | Indication |
|---|---|---|
| 4 | RECEIVER SENSITIVITY TESTS—Continued. | |
| | *c.* Antenna No. 2—Continued. | |
| | (5) Increase ATTEN DB control setting until RESPONSE OR VOLTAGE meter reading falls off abruptly or becomes erratic. Read ATTEN DB dial. | Reading must be 5 or greater. |
| | *d.* Antenna No. 4: | |
| | (1) Place ANT 2–ANT 4 switch in ANT 4 position. | |
| | (2) Perform *c*(2) through *c*(5) above | Reading must be 5 or greater. |
| | (3) Compare readings for antenna 2 and antenna 4 | Difference not greater than 5db. |
| 5 | MISSILE BEACON TRANSMITTER TESTS. (Performed with the rf test set. All equipment in previous operating condition. Recheck ∞ and 0 adjust. | |
| | *a.* Place the TEST SELECTOR switch to TRANS TEST position. | |
| | *b.* Missile Beacon Transmitter Power: | |
| | (1) Set ATTEN DB control to 30. | |
| | (2) Adjust the RF POWER meter reading to a point between 0 DB and 2 DB by adjusting the RF POWER DB switch. (Move the MEAS FREQ control slightly to check that the frequency meter is not absorbing power.) | |
| | (3) The sum of the RF POWER meter reading and the RF POWER DB switch reading is the average power at the power meter in −db. | Sum must be 15 or less. |
| | *c.* Missile Beacon Transmitter Frequency: | |
| | (1) Adjust the MEAS FREQ control for a maximum dip (to the left) on the RF POWER meter. | Indication on RF POWER meter falls off. |
| | (2) Read the MEAS FREQ dial and determine the frequency from the calibrated chart. The frequency must correspond to the frequency assigned to the missile under test. | Assigned frequency ±1 mc. |
| | (3) Detune the frequency meter by turning the MEAS FREQ control at least 3 turns in either direction. | RF POWER meter indication returns. |
| | *Note.* If the frequency is not within the limits specified, the missile beacon magnetron must be adjusted as follows: Remove antenna No. 3 by removing the four screws holding it in place. Remove the sockethead bolt located flush with the antenna mounting well. Engage magnetron tuning control with an insulated screwdriver. Adjust the magnetron tuning as required, tracking with the measure frequency control until the correct frequency is obtained. Hold the antenna in place and recheck the frequency. If the frequency has changed, with the antenna in place, readjust the frequency. When the correct frequency is obtained with the antenna in place, replace the socket-head bolt and install the antenna. | |
| 6 | NONRESPONSE TO ADJACENT CODES. (Performed with the rf test set. All equipment in previous operating condition): | |
| | *a.* Adjust RESPONSE or VOLTAGE meter reading to approximately ¾ scale with the RESPONSE control. | RESPONSE or VOLTAGE meter. |
| | *b.* Change TIME-MICROSECONDS dial settings in 0.75-microsecond increments from 1 microsecond to 10.75 microseconds. At each setting **other than the assigned code,** the missile response must fall off. This checks the missile response at all other codes and the midpoint between code settings. | |
| | *c.* Reset the TIME-MICROSECONDS dials to the missile code plus 0.1 u/second. | RESPONSE or VOLTAGE meter. |
| 7 | PATTERN MODULATOR. (Performed with the rf test set. All equipment in previous operating condition): | |
| | *a.* TEST SELECTOR switch in TRANS TEST position. | |
| | *b.* Connect a telephone headset to the jack designated MON. | |
| | *c.* Observe the RESPONSE or VOLTAGE meter for an indication of missile response. | |
| | *d.* Operate the RESPONSE MON switch and listed to frequency-modulated tone in headset. | Listen for warble. |
| | *e.* Release RESPONSE MON switch. | |

| Step | Operation | Indication |
|---|---|---|
| 8 | RESPONSE TIME MEASUREMENT. (Performed with rf test set. All equipment in previous operating condition): | |
| | *a.* Delta time (delay time) of the rf test set: Use 0.25 microseconds. If required to measure, use the procedure in (1) through (12) below. | |
| | (1) Place the TEST SELECTOR switch in TRANS TEST position. | RF POWER meter reading falls off. |
| | (2) Set TIME-MICROSECONDS dials to code of the missile under test plus 1.0 microsecond. | RF POWER meter reads 2.0. |
| | (3) Adjust CAL ∞ control counterclockwise until the RF POWER meter reads 2.0. | |
| | (4) Decrease the TIME-MICROSECONDS dial setting until missile begins to respond. Adjust until RF POWER meter indicates the start of response by rising 0.1 db (2.0 to 1.9). Make this adjustment carefully. Record the TIME-MICROSECONDS dial setting. | |
| | (5) Turn ADJ CODE knob fully clockwise. | |
| | (6) Set TEST SELECTOR switch to RESP TIME B on GS 15722 model. On GS 15636 models, set TEST SELECTOR switch to RESP TIME and the RESP TIME switch to MISSILE position. | RF POWER meter reads 2.0. |
| | (7) Readjust CAL ∞ control counterclockwise until RF POWER meter reads 2.0. | RF POWER meter reads 1.9. |
| | (8) Turn ADJ CODE knob counterclockwise until the missile begins to respond. Then adjust until the RF POWER meter indicates the start of response by rising 0.1 db (2.0 to 1.9). Make this adjustment carefully. | |
| | (9) Set TEST SELECTOR switch to RESP TIME A on GS 15722 model. On GS 15636 models with test selector switch in RESP TIME position, turn the RESPONSE TIME switch to TEST SIG position. | |
| | (10) Turn the RESPONSE knob fully clockwise. | |
| | (11) Increase TIME-MICROSECONDS dial settings to get maximum coincidence indication. Use RESPONSE control to keep reading on scale. Record TIME-MICROSECONDS dial reading. | Maximum indication on RESPONSE or VOLTAGE meter. |
| | (12) Subtract TIME-MICROSECONDS dial reading obtained in (4) above from the reading obtained in (11) above. The result is the delay of the test set. | Delta time of rf test set. |
| | *b.* Response Time of Missile Guidance Unit: | |
| | (1) TEST SELECTOR switch to RESP TIME A for GS 15722 models. For GS 15636 models, TEST SELECTOR switch to RESP TIME and RESPONSE TIME switch to TEST SIG. | |
| | (2) Set TIME-MICROSECONDS dials to the missile code + delta time + 0.1 microsecond. | |
| | (3) Turn RESPONSE knob fully clockwise. | |
| | (4) Turn ADJ CODE control to obtain maximum coincidence indication. Use RESPONSE control to keep reading on scale. | Maximum indication on RESPONSE or VOLTAGE meter. |
| | (5) TEST SELECTOR switch to RESP TIME B on GS 15722 models. For GS 15636 models, place RESPONSE TIME switch in MISSILE position. | |
| | (6) RESPONSE control turned fully clockwise. | |
| | (7) Increase the TIME-MICROSECONDS dial settings to obtain maximum coincidence indication. Use RESPONSE control to keep reading on scale. The TIME-MICROSECONDS dial reading is equal to code time + delta time + 0.1 microsecond + missile response time. | Maximum indication on RESPONSE or VOLTAGE meter. |

| Step | Operation | Indication |
|---|---|---|
| 8 | RESPONSE TIME MEASUREMENT—Continued. | |
| | *b.* Response Time of Missile Guidance Unit—Continued. | |
| | (8) Subtract reading set in (2) above (code + delta time + 0.1 microsecond) from reading obtained in step (7) above (code + delta time + 0.1 microsecond + response time). The result is measured response time. | Measured response time. |
| | (9) There is an inherent time delay in the waveguide of 0.04 microsecond. Subtract this value (0.04 microsecond) from measured response time (8) above to obtain actual missile response time. | Actual missile response time (measured response time minus 0.04 usec). |
| | (10) Response time for missiles with serial number 7117 and above and guidance section model number GS-16725 is 0.61 ± 0.07 microsecond. On others on which field change 5026 or 5027 has not been made, consult the missile log book. | |
| 9 | BURST CIRCUITRY. (Performed on rf test set. All equipment in previous operating condition): | |
| | *a.* TEST SELECTOR Switch to COMM SIG Position. | |
| | *b.* Command Burst Time Measurement: | |
| | (1) Operate RESET switch and observe the BURST TIME-MILLISECONDS counting tubes. | Glow at 0 or reset position only. |
| | (2) After 3 seconds, operate the START switch and read the BURST TIME-MILLISECONDS counting tubes. Record the reading. | |
| | (3) Repeat (1) and (2) above to obtain 10 readings within tolerance. Total number of readings not to exceed 15. | Position of glow on X10 and X1 counting tubes indicates burst time. For GS-15636 test set, 10 of the 15 readings must be 63 ± 4.0 milliseconds; for GS-15722, 64 ± 5 milliseconds. |
| | *Note.* If 10 of the 15 readings are not within tolerance, command burst time must be adjusted. This adjustment entails removal of the guidance section and is not part of normal missile checkout. | |
| | *c.* Fail-Safe Time Measurement (GS 15722 models): | |
| | (1) Operate the RESET switch and observe BURST TIME-MILLISECONDS counting tubes. | |
| | (2) Observe RESPONSE or VOLTAGE meter | Indication of missile response. |
| | (3) Turn the COMMAND CAL switch to TIME position | |
| | (4) Simultaneously operate the START switch and begin counting. Continue counting and observe BURST TIME-MILLISECONDS counting tubes. | Loss of response. Glow on all cathodes. |
| | (5) Stop counting when X1 milliseconds counting tube indicates receipt of fail-safe signal. | Glow stops in 1 position only. |
| | (6) The count obtained between step (4) (start of counting) and step (5) (tubes stop counting) is the fail-safe time. The fail-safe time must be within tolerance. | Fail-safe time, 3 to 7 seconds. |
| | (7) Depress RESET switch and turn COMMAND CAL switch to MEAS position to replace steering commands. | |
| | *d.* Fail-Safe Time Measurements (GS1 15636 models): | |
| | (1) Operate the RESET switch and observe BURST TIME-MILLISECONDS counting tubes. | Glow at 0 or reset position only. |
| | (2) Observe RESPONSE or VOLTAGE meter | Indication of missile response. |
| | (3) Simultaneously turn ADJ CODE control to remove commands from the missile and begin counting in increments of one second. | Indication on RESPONSE or VOLTAGE meter falls off. |
| | (4) Operate the start switch before three seconds elapse. Continue counting and observe BURST TIME-MILLISECONDS counting tubes. | Glow on all cathodes. |

| Step | Operation | Indication |
|---|---|---|
| 9 | BURST CIRCUITRY—Continued. | |
| | *d.* Fail-Safe Time Measurements—Continued. | |
| | (5) Stop counting when XI milliseconds counting tube indicates receipt of fail-safe signal. | Glow stops on position only. |
| | (6) The count obtained between (3, start of count) and (5, tubes stop counting) above is the fail-safe time. The fail-safe time must be within tolerance. | |
| | (7) Depress RESET switch and replace commands with the ADJ CODE knob. | |
| 10 | BUZZ VOLTAGE ADJUSTMENTS. Turn missile hydraulic test stand power ON. All other equipment in previous operating condition. | |
| | ***Warning:*** FINS SHOULD BE CONSIDERED DANGEROUS. | |
| | *a.* Roll Buzz: | |
| | (1) Center ailerons by presetting roll gyro. | See paragraph 227. Feel buzz on ailerons. |
| | (2) Depress ROLL FIN pushbutton on TCU. | |
| | (3) Hold VALVE VOLTAGE switch in BUZZ position. | |
| | (4) Adjust the roll buzz potentiometer through the port marked RBZ in the guidance section casting and observe the valve meter. | |
| | *b.* Pitch Buzz: | |
| | (1) Place the PITCH COMMAND switch to 0G on rf test set. | See paragraph 227 Feel buzz on pitch fins. |
| | (2) Depress PITCH FIN pushbutton on TCU. | |
| | (3) Hold VALVE VOLTAGE switch in BUZZ position. | |
| | (4) Adjust the pitch buzz potentiometer through the port marked PBZ in the guidance section casting and observe the VALVE meter. | |
| | *c.* Yaw Buzz: | |
| | (1) Place the YAW COMMAND switch to 0G on rf test set. | See paragraph 227. Fell buzz on yaw fins. |
| | (2) Depress YAW FIN pushbutton on TCU. | |
| | (3) Hold VALVE VOLTAGE switch in BUZZ position. | |
| | (4) Adjust the yaw buzz potentiometer through the port marked YBZ in the guidance section casting and observe the VALVE meter. | |
| 11 | YAW SERVO OPERATION TESTS AND ADJUSTMENTS. (Performed with test control unit. All other equipment in previous operating condition): | |
| | *a.* Missile in Normal Test Position (No. 1 fin up). | |
| | *b.* Yaw Accelerometer Tests (dynamic and static): | |
| | (1) Depress YAW ACC pushbutton. | |
| | (2) Depress SERVO meter and METER SENSITIVITY pushbutton. Observe SERVO meter in (3), (4), and (5) below. | |
| | (3) Move missile nose sharply right | Negative swing of SERVO meter needle. |
| | (4) Move missile nose sharply left | Positive swing of SERVO meter needle. |
| | (5) Missile in static state | 0 percent ± 10 percent reading on SERVO meter. |
| | *c.* Yaw Rate Gyro Tests (dynamic and static): | |
| | (1) Depress YAW RATE pushbutton. | |
| | (2) Depress SERVO METER SENSITIVITY pushbutton. Observe SERVO meter in (3), (4), and (5) below. | |
| | (3) Move missile nose sharply right | Negative swing of SERVO meter needle. |
| | (4) Move missile nose sharply left | Positive swing of SERVO meter needle. |
| | (5) Missile in static state | 0 percent ± 10 percent reading on SERVO meter. |
| | *d.* Yaw Buzz Voltage. Check and readjust if necessary | See paragraph 227. |
| | *e.* Yaw Amplifier Balance and Mechanical Positioning of Fins: | |
| | (1) YAW FIN pushbutton depressed. | |
| | (2) Depress SERVO meter and METER SENSITIVITY pushbutton. Observe SERVO meter in (3) below. | |

| Step | Operation | Indication |
|---|---|---|
| 11 | YAW SERVO OPERATION TESTS AND ADJUSTMENTS—Con. | |
| | *e.* Yaw Amplifier Balance and Mechanical Positioning of Fins—Con. | |
| | (3) Adjust the yaw amplifier balance potentiometer through port marked Y in the guidance section casting. | 0 percent ±10 percent reading on SERVO meter. |
| | (4) Depress VALVE meter and METER SENSITIVITY pushbutton. Observe VALVE meter. | 0 percent ±100 percent reading on VALVE meter. |
| | (5) Both yaw fins must be on the center scribe line. If not, they must be unbolted, moved to the center scribe line, and torqued to 73 to 100 inch-pounds. | Fins on center scribe line. |
| | (6) Recheck buzz and amplifier balance adjustment. | |
| | (7) Place YAW COMMAND switch (rf test set) to −5G position | Fins fully deflected. |
| | (8) Place YAW COMMAND switch to 0G position | Fins on center scribe line. |
| | (9) Place YAW COMMAND switch to +5G position | Fins fully deflected. |
| | (10) Place YAW COMMAND switch to 0G position | Fins on center scribe line. |
| | *f.* Roll the missile to the 90° clockwise position. | |
| | *g.* Yaw Static Checks (90° clockwise pattern): | |
| | (1) Depress SERVO METER SENSITIVITY pushbutton and observe SERVO meter in (2), (3), and (4) below. | |
| | (2) Depress YAW ACC pushbutton | Positive reading on SERVO meter. |
| | (3) Depress YAW RATE pushbutton | 0 percent ±10 percent reading on SERVO meter. |
| | (4) Depress YAW FIN pushbutton | Positive reading on SERVO meter. |
| 12 | PITCH SERVO OPERATING TEST AND ADJUSTMENTS. (Performed with test control unit. All equipment in previous operating condition): | |
| | *a.* Missile in 90° Clockwise Position. | |
| | *b.* Pitch Accelerometer Test (dynamic and static): | |
| | (1) Depress PITCH ACC pushbutton. | |
| | (2) Depress SERVO meter and METER SENSITIVITY pushbutton. Observe SERVO meter during (3), (4), and (5) below. | |
| | (3) Move missile nose sharply right | Negative swing of SERVO meter needle. |
| | (4) Move missile nose sharply left | Positive swing of SERVO meter needle. |
| | (5) Missile in static state | 0 percent ±10 percent reading on SERVO meter. |
| | *c.* Pitch Rate Gyro Test (dynamic and static): | |
| | (1) Depress PITCH RATE pushbutton. | |
| | (2) Depress SERVO meter and METER SENSITIVITY pushbutton. Observe SERVO meter during (3), (4), and (5) below. | |
| | (3) Move missile nose sharply to the right | Negative swing of SERVO meter needle. |
| | (4) Move missile nose sharply left | Positive swing of SERVO meter needle. |
| | (5) Missile in static state | 0 percent ±10 percent reading on SERVO meter. |
| | *d.* Pitch Buzz Voltage. Check and adjust if necessary | See paragraph 227. |
| | *e.* Pitch Amplifier Balance and Mechanical Positioning of Fins: | |
| | (1) PITCH FIN pushbutton depressed. | |
| | (2) Depress SERVO meter and METER SENSITIVITY pushbutton. Observe SERVO meter during (3) below. | |
| | (3) Adjust the pitch amplifier balance potentiometer through the port marked P in the guidance section casting. | 0 percent ±10 percent reading on SERVO meter. |
| | (4) Depress VALVE meter and METER SENSITIVITY pushbutton. Observe VALVE meter. | 0 percent ±100 percent reading on VALVE meter. |
| | (5) Both pitch fins must be on the center scribe line. If not, they must be unbolted, moved to the center scribe line, and torqued to 73 to 100 inch-pounds. | Fins on center scribe line. |
| | (6) Recheck buzz and amplifier balance adjustments. | |
| | (7) Turn PITCH COMMAND switch on rf test set to −5G position. | Fins fully deflected. |

| Step | Operation | Indication |
|---|---|---|
| 12 | PITCH SERVO OPERATING TEST AND ADJUSTMENTS—Continued. | |
| | *e.* Pitch Amplifier Balance and Mechanical Positioning of Fins—Continued. | |
| | (8) Turn PITCH COMMAND switch to 0G position | Fins on center scribe line. |
| | (9) Turn PITCH COMMAND switch to +5G position | Fins fully deflected. |
| | (10) Turn PITCH COMMAND switch to 0G position | Fins on center scribe line. |
| | *f.* Roll the missile 90° counterclockwise to the normal test position. | |
| | *g.* Pitch Static Checks (normal test position): | |
| | (1) Depress SERVO meter and METER SENSITIVITY pushbutton. Observe SERVO meter during (2), (3), and (4) below. | |
| | (2) Depress PITCH AGC pushbutton | Negative reading on SERVO meter. |
| | (3) Depress PITCH RATE pushbutton | 0 percent ±10 percent on SERVO meter. |
| | (4) Depress PITCH FIN pushbutton | Negative reading on SERVO meter. |
| 13 | ROLL SERVO OPERATION TESTS AND ADJUSTMENTS. (Performed with test control unit and test power control unit. All equipment in previous operating condition): | |
| | *a.* Gyro Preset Operation, Missile in Normal Test Position: | |
| | (1) Depress missile separation switch on missile. | |
| | (2) Turn ROLL POSITION switch to PRESET. | |
| | (3) Set GYRO CAGE-UNCAGE switch to CAGE | UNCAGE IND light extinguished. |
| | (4) Depress SERVO TEST SELECTOR, ROLL POS pushbutton. | |
| | (5) Depress SERVO meter and METER SENSITIVITY pushbutton. Observe the SERVO meter in (6) through (10) below. | |
| | (6) Hold the GYRO PRESET switch in the counterclockwise position. | SERVO meter needle reads 1, 2, 3, 4. Observe ailerons for proper movement. |
| | (7) Hold the GYRO PRESET switch in the clockwise position | SERVO meter needle reads 1, 2, 3, 4. Observe ailerons for proper movement. |
| | (8) Place ROLL POSITION switch in FLIGHT position. | |
| | (9) Hold the GYRO PRESET switch in the counterclockwise position. Observe SERVO meter and ailerons. | SERVO meter needle swings full scale left and right alternately. Full deflection of ailerons left and right. |
| | (10) Hold the GYRO PRESET switch in the clockwise position. Observe SERVO meter and ailerons. | SERVO meter needle swings full scale left and right alternately. Full deflection of ailerons left and right. |
| | *b.* Gyro Preset to Control Point: | |
| | (1) Depress SERVO meter and METER SENSITIVITY pushbutton. Observe SERVO meter in (2) through (6) below. | |
| | (2) Turn ROLL POSITION switch to FLIGHT position. | |
| | (3) Operate the GYRO PRESET switch until the SERVO meter indicates 1. | SERVO meter needle reads 1. |
| | (4) Place the ROLL POSITION switch in the PRESET position. | |
| | (5) If the SERVO meter needle continues to indicate 1, the gyro is preset to the control point. | SERVO meter needle reads 1. |
| | (6) If the SERVO meter needle indicates other than 1, repeat (2) through (5) above. | SERVO meter needle indicates 1. (In FLIGHT and PRESET positions.) |
| | *Note.* If the missile power is turned off at any time, the roll position gyro will not maintain its reference. Therefore, it will be necessary to place the missile in normal test position, reset the gyro to the control point before continuing the checkout. | |
| | (7) Set the ROLL POSITION switch to FLIGHT position. | |
| | (8) Place the GYRO CAGE-UNCAGE switch to UNCAGE | RED UNCAGE IND light illuminates. |
| | *c.* Roll Rate Gyro Test Static. | |
| | (1) Depress ROLL RATE pushbutton. | |
| | (2) Depress SERVO METER SENSITIVITY pushbutton and observe SERVO meter. | 0 ±10 percent reading on SERVO meter. |
| | *d.* Roll Buzz Voltage. Check and adjust if necessary. | 86 percent to 128 percent reading on VALVE meter. |

| Step | Operation | Indication |
|---|---|---|
| 13 | ROLL SERVO OPERATION TESTS AND ADJUSTMENTS—Continued. | |
| | *e.* Roll Amplifier Balance: | |
| | (1) Check the control point setting of the gyro as in *b*(12) to insure that the gyro has not changed its reference. If the indication is not correct, reset the gyro to the control point before balancing the amplifier. | SERVO meter needle indicates 1 in FLIGHT and PRESET positions. |
| | (2) Depress ROLL FIN pushbutton. | |
| | (3) Depress SERVO meter and METER SENSITIVITY pushbutton. Observe SERVO meter in (4) below. | |
| | (4) Adjust the roll amplifier balance potentiometer through the access port marked R in the guidance section casting until the ailerons are on the center scribe lines. Read SERVO meter. | Ailerons on center scribe lines. 0 percent ±10 percent reading on SERVO meter. |
| | (5) Depress the VALVE meter and METER SENSITIVITY pushbutton. Observe the VALVE meter. | 0 percent ±100 percent reading on VALVE meter. |
| | (6) Recheck the gyro control point setting, buzz voltage, and amplifier balance. | |
| | *f.* Roll Rate Gyro Tests (dynamic): | |
| | (1) Depress ROLL RATE pushbutton. | |
| | (2) Depress SERVO meter METER SENSITIVITY pushbutton and observe SERVO meter in (3) and (4) below. | |
| | (3) Roll (sharply) the missile a few degrees counterclockwise | Positive swing of SERVO meter needle. |
| | (4) Roll (sharply) the missile a few degrees clockwise | Negative swing of SERVO meter needle. |
| | *g.* Roll Servo Test, 90° Clockwise Position: | |
| | (1) Roll the missile to the 90° clockwise position. | |
| | (2) Depress the SERVO meter METER SENSITIVITY pushbutton and observe SERVO meter in (3), (4), and (5) below. | |
| | (3) Depress the ROLL POS pushbutton | —100 percent ±20 percent reading on SERVO meter. |
| | (4) Depress the ROLL RATE pushbutton | 0 percent ±10 percent reading on SERVO meter. |
| | (5) Depress the ROLL FIN pushbutton | Negative reading on SERVO meter. |
| | (6) Note the position of the ailerons | Deflected hardover, indicating a counterclockwise correction. |
| 14 | PRESSURE PICKUP CHECK. (Performed with test control unit and stagnation pressure pump. All equipment in previous operating condition): | |
| | *a.* Roll the missile to the normal flight position (battery box up) and turn ROLL POS switch to PRESET on TCU. | Ailerons deflected slightly. |
| | *b.* Place the YAW COMMAND and PITCH COMMAND switches to 0G position (rf test set). | |
| | *c.* Insure that the hose from the stagnation pressure pump is connected to the pressure pickup fitting on missile. | |
| | *d.* Open the VENT fitting on the pump. | |
| | *e.* Depress the FIN VOLT pushbutton on the VOLTAGE SELECTOR bank on the test control unit. | |
| | *f.* Pressure Check: | |
| | (1) Turn the pump selector knob to PRESSURE. | |
| | (2) Apply 55 psi pressure from the pump | Pump meter indicates 55 psi. |
| | (3) Observe the control fins and ailerons | Deflect toward center scribe lines. |
| | (4) Observe the VOLTAGE meter on the TCU | Increased reading (deflects away from zero). |
| | *g.* Vacuum Check: | |
| | (1) Release pressure and turn pump selector knob to VACUUM. | |
| | (2) Apply a vacuum | Pump meter indicates vacuum. |
| | (3) Observe the control fins and ailerons | Deflect away from center scribe lines. |
| | (4) Observe the VOLTAGE meter on the TCU | Decreased reading (deflects toward zero). |
| | (5) Release the vacuum. | |

| Step | Operation | Indication |
|---|---|---|
| 15 | PRECISE COMMAND CHECK. (Performed with rf test set and test control unit. All equipment in previous operating condition): | |
| | *a.* Yaw Servo Operation: | |
| | (1) Place YAW COMMAND switch to +5G position on the rf test set. | Yaw fins fully deflected. |
| | (2) Depress the YAW +5G pushbutton on the TCU | Canceling movement of fins. |
| | (3) Depress SERVO meter METER SENSITIVITY pushbutton and observe SERVO meter on the TCU. | 0 percent ±10 percent reading on SERVO meter. |
| | (4) Place YAW COMMAND switch to 0G position on the rf test set. | Yaw fins fully deflected. |
| | (5) Depress −5G pushbutton on the TCU | Yaw fins fully deflected. |
| | (6) Place YAW COMMAND switch to −5G position on the rf test set. | Canceling movement of fins. |
| | (7) Depress SERVO meter and METER SENSITIVITY pushbutton. Observe SERVO meter on the TCU. | 0 percent ±10 percent reading on SERVO meter. |
| | (8) Depress YAW FIN pushbutton on the TCU | Yaw fins fully deflected. |
| | (9) Place YAW COMMAND switch to 0G position on the rf test set. | Canceling movement of fins. |
| | (10) Depress SERVO meter and METER SENSITIVITY pushbutton. Observe SERVO meter on the TCU. | −19 percent ±10 percent reading on SERVO meter. |
| | *b.* Pitch Servo Operation: | |
| | (1) Place PITCH COMMAND switch to +5G position on the rf test set. | Pitch fins fully deflected. |
| | (2) Depress the PITCH +5G pushbutton on the TCU | Canceling movement of fins. |
| | (3) Depress SERVO meter and METER SENSITIVITY pushbutton. Observe SERVO meter on the TCU. | 0 percent ±10 percent reading on SERVO meter. |
| | (4) Place PITCH COMMAND switch to 0G position on the rf test set. | Pitch fins fully deflected. |
| | (5) Depress −5G pushbutton on the TCU | Pitch fins fully deflected. |
| | (6) Place PITCH COMMAND switch to −5G position on the rf test set. | Canceling movement of fins. |
| | (7) Depress SERVO meter and METER SENSITIVITY pushbutton. Observe SERVO meter on the TCU. | 0 percent ±10 percent reading on SERVO meter. |
| | (8) Depress PITCH FIN pushbutton on the TCU | Pitch fins fully deflected. |
| | (9) Place PITCH COMMAND switch to 0G position | Canceling movement of fins. |
| | (10) Depress SERVO meter and METER SENSITIVITY pushbutton. Observe SERVO meter on the TCU. | −19 percent ±10 percent reading on SERVO meter. |
| 16 | INTERNAL OPERATION. (Performed with rf test set and electrical test set. All equipment in previous operating condition): | |
| | *a.* Gyro Preset: | |
| | (1) Turn the GYRO CAGE-UNCAGE switch to the CAGE position. | Red UNCAGE IND light extinguished. |
| | (2) Preset GYRO to control point | SERVO meter (sensitive scale) reads 1 in both the FLIGHT and PRESET positions of the ROLL POSITION switch. |
| | ***Warning:*** The fins must be considered dangerous. Use extreme caution. | |
| | *b.* Guidance Section Blower Removal: | |
| | (1) Place the YAW COMMAND and PITCH COMMAND switches to +5G on the rf test set. | |
| | (2) Turn the guidance section blower ac ON-OFF switch to OFF. | |
| | (3) Remove the guidance section blower from the missile. | |
| | (4) Reduce hydraulic pressure to 0 with bypass valve. | |
| | *c.* Inertia Switch Operation: | |
| | (1) Arm the guidance section inertia switch by pressing the inertia weight toward the rear of the missile. | When inertia switch is armed, HEATERS EXTERNAL and VIBRATOR EXTERNAL lights extinguished. Red MISSILE INTERNAL and UNCAGE IND lights are illuminated. |

| Step | Operation | Indication |
|---|---|---|
| 16 | INTERNAL OPERATION—Continued. | |
| | *c.* Inertia Switch Operation—Continued. | |
| | (2) Immediately reset the inertia switch by moving the inertia weight forward. | MISSILE INTERNAL and UNCAGE IND light remain illuminated when inertia switch is reset. MISSILE INTERNAL light dims slightly. |
| | (3) Observe the MISSILE CURRENT and MISSILE VOLTAGE meters on TPCU. | MISSILE CURRENT and MISSILE VOLTAGE meters read 100 percent ± 10 percent. |
| | *d.* Yaw Commands: | |
| | (1) Close hydraulic test stand bypass valve. | |
| | (2) Place YAW COMMAND switch in FINS position on the rf test set. | |
| | (3) Turn FINS knob fully clockwise | Yaw fins to +2G position. |
| | (4) Turn FINS knob fully counterclockwise | Yaw fins to −2G position. |
| | (5) Vary FINS knob through entire range | Smooth fin response. |
| | *e.* Pitch Commands: | |
| | (1) Place PITCH COMMAND switch in FINS position on the rf test set. | |
| | (2) Turn FINS knob fully clockwise | Pitch fins to +2G position. |
| | (3) Turn FINS knob fully counterclockwise | Pitch fins to −2G position. |
| | (4) Vary FINS knob through entire range | Smooth fin response. |
| | *f.* Roll Servo Operation: | |
| | (1) Remove separation holddown switch. | |
| | (2) Turn ROLL POSITION switch to PRESET. | |
| | (3) Roll the missile in a clockwise direction and observe aileron response. | Ailerons deflect in direction of roll. |
| | (4) Roll the missile counterclockwise from normal flight position and observe aileron response. | Ailerons deflect in direction of roll. |
| | (5) Return the missile to the normal flight position, observe ailerons, and check control point setting of the gyro. | Gyro reads to control point (1) and ailerons return to center position. |
| 17 | MISSILE RELEASE: | |
| | *a.* Depress missile hydraulic test stand STOP pushbutton and bleed the missile hydraulic system as follows: | |
| | (1) Open the BYPASS VALVE on the test stand by turning it fully counterclockwise. | |
| | (2) Turn the PITCH COMMAND FINS and YAW COMMAND FINS knobs clockwise until the fins cease to respond. | |
| | *b.* Place INTERNAL-EXTERNAL switch on the TPCU to EXTERNAL position. | HEATERS EXTERNAL and VIBRATOR EXTERNAL lights illuminate. INTERNAL light extinguished. |
| | *c.* Recheck missile transmitter frequency. | |
| | *d.* Operate GYRO CAGE-UNCAGE switch to the CAGE position on the TPCU. | UNCAGE IND light extinguished. |
| | *e.* Place the VIBRATORS EXTERNAL, HEATER EXTERNAL, and AC POWER switches to their OFF positions on the TPCU. | |
| | *f.* Disconnect all test equipment from the missile: | |
| | (1) Antenna saddle. | |
| | (2) Missile power cable. | |
| | (3) Missile test cable. | |
| | (4) Battery simulator cable. | |
| | (5) Hydraulic quick-disconnect plug. | |
| | (6) Stagnation pressure pump. | |
| | *g.* Install the missile battery box and the missile battery. | |
| | *h.* Replace the plugs in the guidance section casting ports marked P, RY, CSG-RBZ, PBZ, and YBZ. | |
| | *i.* Connect the pressure potentiometer feed line fitting. | |
| | *j.* Replace tunnels Nos. 1, 2, and 3. | |

## 246. Battery Installation

*a. General.* The primary internal power source for the missile guidance section is a 28-volt, nickel-cadmium battery. The battery contains 24 cells, with a total output of 10 amperes at 28 volts. The battery is inclosed in a special battery box which is then installed in the missile. Heating facilities are provided within the battery box. Power is supplied by the battery to the power-supply unit which supplies all of the electrical power for the guidance section except the vacuum tube heaters and the gyros which are supplied directly from the battery. After the missile is uncrated, the battery box is removed from the guidance section and taken to the battery charging console. Here a battery is tested and placed in the battery box. After the missile passes the completed missile test, the battery box is placed in the missile, unless the missile is to go to inert storage. The battery is not installed in the missile until it is to be delivered to the launching section. **1,** assisted by **3,** as needed, will be responsible for testing and installing the battery.

*b. Procedure* (fig. 164).

Test the battery. If satisfactory, remove from the charging rack. See TM 11-5069 for test procedure.

Install the plastic top on the battery and the insulators over the wire terminals.

Check the battery box to be certain that the thermostatic control unit lies correctly in the insulator in the gutter in the bottom of the battery box.

Carefully insert the battery into the battery box with the leads at the aft end where the flanges are the widest. Install the rubber pads in each end of the battery box. Do not crush the ends of the heating pad. The heating pad should fit between the battery case and the sides of the box. Make sure that both of the heater leads are free.

Insure that the flat gasket is installed on top of the battery-box flanges.

Feed the battery and heater leads, one at a time, up through the grommets in the battery cover.

Check to make sure that the battery well in the missile is free of any foreign matter and that it is clean and dry.

Install and secure the cover on the battery box.

Make sure that the O-ring gasket is installed under the battery box and gusset.

Install the battery box in the guidance section. Fasten the box in place in the missile with the screws provided.

Connect the battery heater leads and other electrical connections and install the cover on the terminal strip.

## 247. Guidance Unit Air Pressure Check

**1** pressurizes the guidance unit to 18 psi through the valve located under tunnel No. 1. Use the propulsion plumbing test equipment.

After 3 minutes, **1** checks the air pressure. Not more than 1 psi leakage is allowed.

If there is no leakage, **1** depressurizes the guidance unit and replaces the valve cap.

## 248. Final Pressurization

**1, 2,** and **4** pressurize the missile to 3,500 psi, or to that specified by SOP. Use the procedure set forth in paragraph 238, omitting the leak checks and depressurization parts.

## 249. Missile-Booster Joining

At this point in the assembly operations the missile and booster (except booster fins and igniter) are joined together on the missile transporter. The booster may be lifted by using the joining hoist or a davit. An alternate method is to join the missile and booster with the rail on the storage rack rather than on the trailer. A launching and transporting rail is brought in on a transporter-trailer. If the alternate method is used, **6** and **7** transfer the rail from the transporter-trailer to the loading racks.

*a. Attaching Joining-Hoist* (A-*Frame*) *to Booster.*

**6** and **7** attach the swivel hook on the end of the joining hoist cable to the lifting point on the booster-hoist beam marked LIFT POINT FOR BOOSTER.

**6** and **7** position the missile hoist beam so that the end marked BOOSTER TAIL is over the booster housing just forward of the shroud.

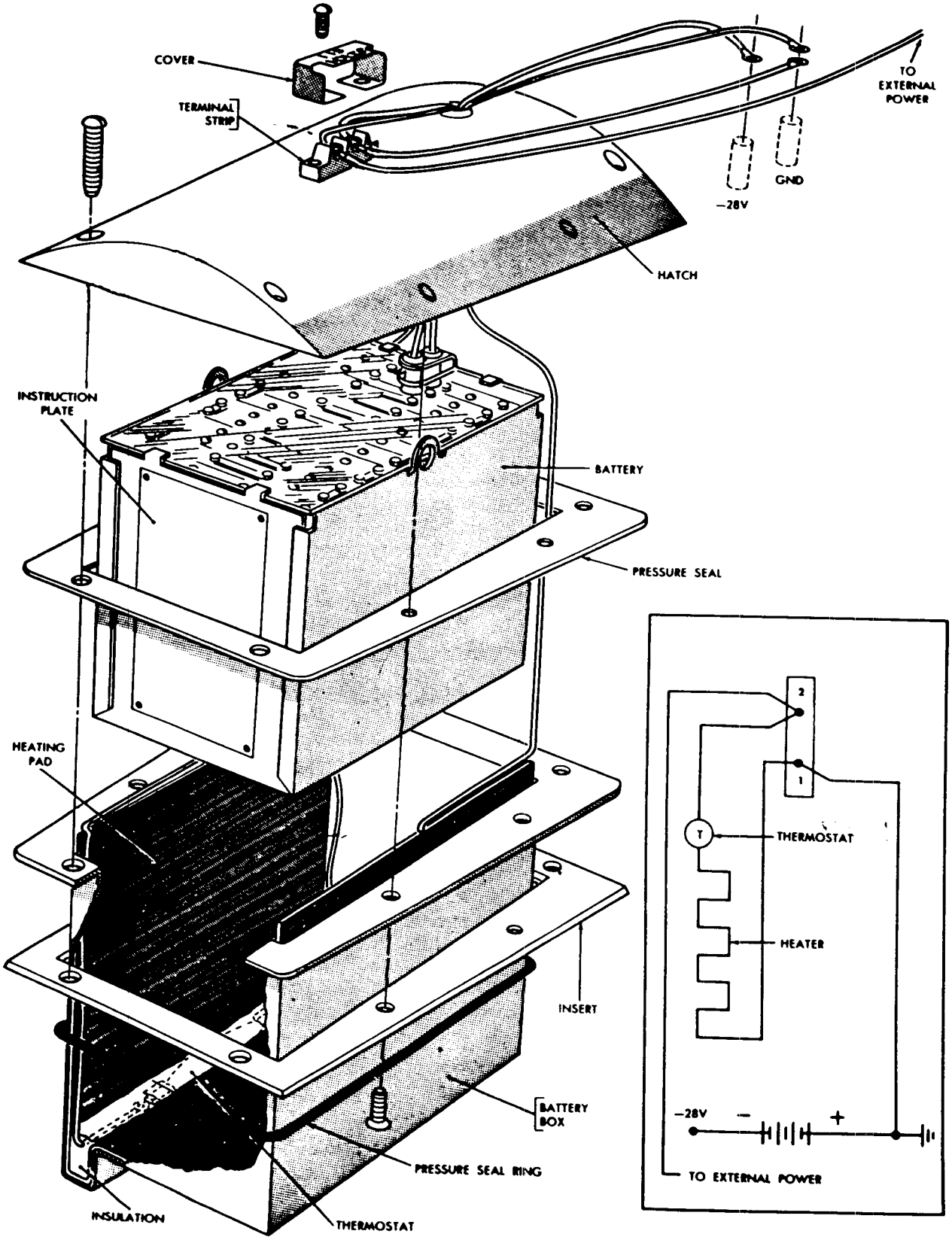


*Figure 164. Battery installation.*

**6** and **7** remove the forward lifting sling from the beam by removing the two safety pins from the ends of the sling-attach pins and pulling the attach pins out. They then fasten the sling around the booster immediately aft of the thrust structure, fasten the sling to the beam with the sling-attach pins and the safety pins.

**6** and **7** remove the aft lifting sling from the beam by removing the two safety pins from the ends of the sling-attach pins and pulling the attach pins out. They then fasten the sling around the booster just forward of the shroud, fasten the sling to the beam, and replace the sling-attach pins and the safety pins.

*b. Installing Booster on Launching and Transporting Rail* (fig. 165).

**8,** using the joining hoist, raises the booster until it clears the rail assembly.

**6, 7,** and **8** position the hoist so that the booster is over the rail.

While **6** and **7** aline and position the booster over the aft end of the rail, **8** lowers the booster until the booster launching lugs are seated on the rail.

**6** and **7** rotate the lug plates 90° and reinstall the bolts.

**6** insures that the aft end of the booster is positioned against the stops at the aft end of the rail.

**6** and **7** remove the safety pins and the sling-attach pins from the fore and aft slings, remove the slings, and reattach them to the hoist beam.

**8** removes the power crane and hoist beam from the immediate working area.

*c. Attaching Hoist Beam to Missile.*

**8** attaches the swivel hook on the joining hoist to the complete missile lift point on the missile-hoist beam.

***Caution:*** The swivel hook must lift the complete missile at the lifting point on the hoist corresponding to the center of gravity of the load.

This is marked MISSILE LIFT POINT FOR COMPLETE MISSILE. If lifted at the wrong point, the missile will swing

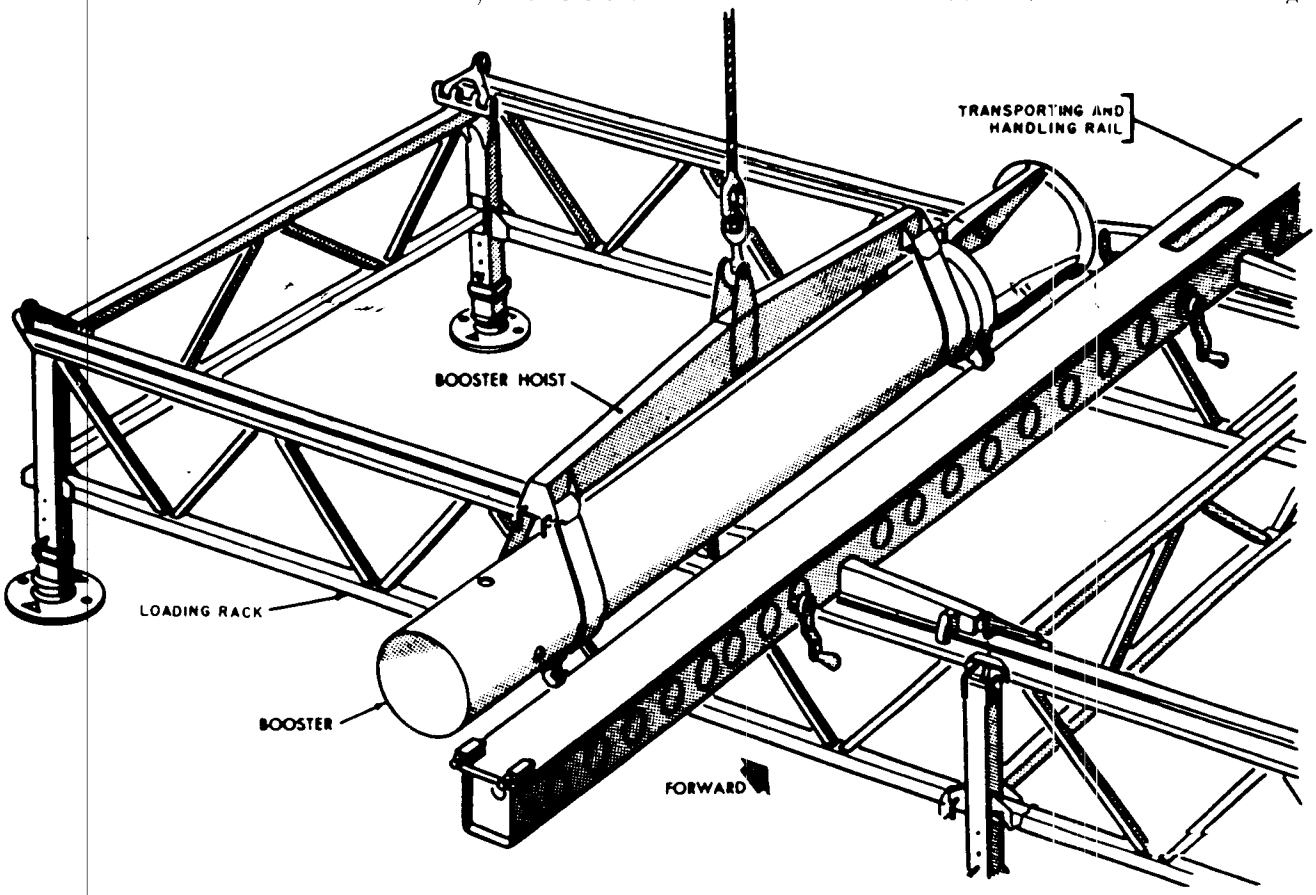


*Figure 165. Installing booster on rail.*

downward at one end, resulting in possible injury to personnel or damage to the missile.

**6** and **7** attach the hoist link assemblies to the missile handling rings using the four steel pins provided.

**6** and **7** prepare the rail to receive the missile by loosening the clamp and wing nuts on the hook assembly and by latching the forward support, electric plug, and the missile hydraulic quick-disconnect plug in the retracted position (figs. 166, 167, and 168).

*d. Joining Missile to Booster* (fig. 169).

**8,** using the joining hoist, raises the missile from the missile dolly until it clears the rail assembly. **6** and **7** remove the lower half of the forward and aft handling rings.

**8** then positions the crane so that the missile is over the rail (fig. 169).

While **6** and **7** guide the missile, **8** lowers the missile until it is within approximately 2 inches of the rail.

**6** and **7** move the missile aft by hand until the motor section is almost fully seated in the thrust fitting.

**1** removes the cover from the electrical plug and the ground power plug and insures each plug will seat properly in the missile. He then retracts both plugs and replaces the protective covers (figs. 166, 167, and 170). In figure 170, the hydraulic actuating lanyard is not shown in its finally installed position. When completely installed, the pivot arm is up and the actuating lanyard coiled rather than straight.

**1** insures that the launching rail forward latch, located on the forward support yoke, is in the extreme aft position and the yoke is tilted slightly forward of the vertical position in order to receive the missile (fig. 171).

**8** slowly lowers the missile while **6** and **7** guide it aft by hand so that the index pin in the booster thrust structure seats in the indexing hole in the aft end of the missile.

After the missile is seated in the booster, **1** locks the forward support yoke (with the yoke support pin) in the vertical (locked) position, and tightens the wing nut on the bottom of the support assembly.

**1** insures that the yoke is tight. If it is not, **6** and **7** adjust the two booster stop bolts and check nuts equally on the aft end of the rail until the yoke is tight.

The adjusted position of the booster may cause malfunctioning of the missile-away switch. If this occurs, **1** adjusts the striking bolts so the missile-away switch will have one-eighth inch freeplay when the booster is positioned against the stops. In some cases it may be necessary to install the missile-away switch lever in the alternate position before adjusting the striking bolts.

After these adjustments have been made, **6, 7,** and **8** remove the hoist assembly and the upper segments of the missile handling rings.

After the joined missile and booster are delivered to the launcher-loader assembly, the launching section personnel remove the protective covers from the electric and hydraulic plugs, seat and wire the hydraulic plug, seat the electric plug, install the hydraulic arming lanyard safety wire, and connect the hydraulic arming lanyard and the propulsion arming lanyard.

**7** attaches the propulsion-system arming lanyard to the thrust fitting. Do not connect the lanyard. Tape it to the missile. The final connection is made at the launcher-loader.

**1** tapes the squib igniter wiring to the aft end of the booster.

**6** and **7** transfer the missile-booster to the transporter trailer (par. 293) if the joining has been done on the storage racks.

**8** stores the booster fins in the rear storage compartment of the transporter-trailer.

A truck driver tows the trailer to the fueling or storage area.

## 250. Inert Missile Storage

In this area those missiles, less boosters, that are in operating condition but lack warheads and propellents, are stored until such time as they are required. Shelter will be provided to protect the missiles from the weather. Periodic checks and maintenance inspections will be performed. When these missiles are required they will be taken to the joining area and transported along with other recently pressurized missiles to the fueling area.

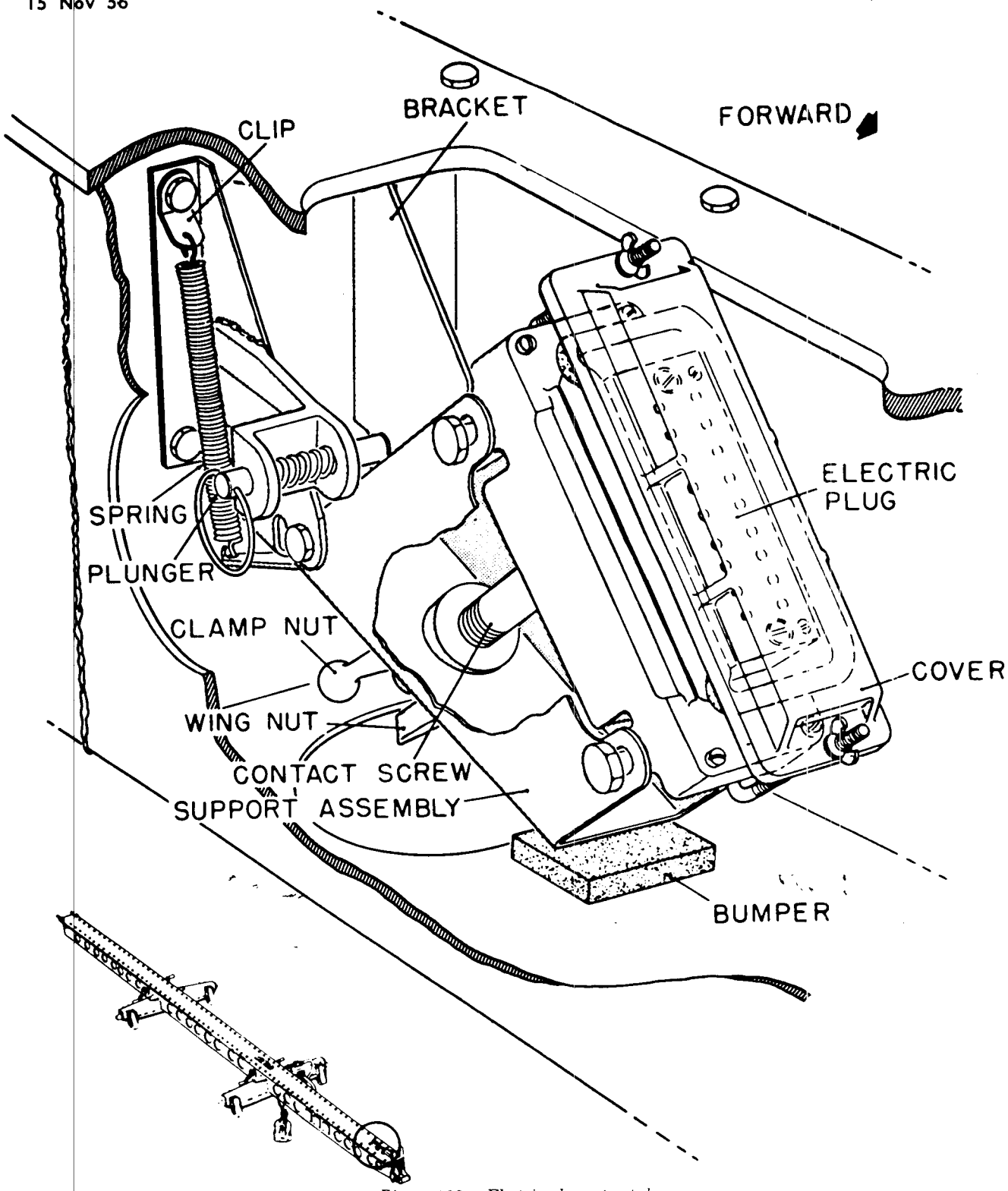


*Figure 166. Electric plug retracted.*

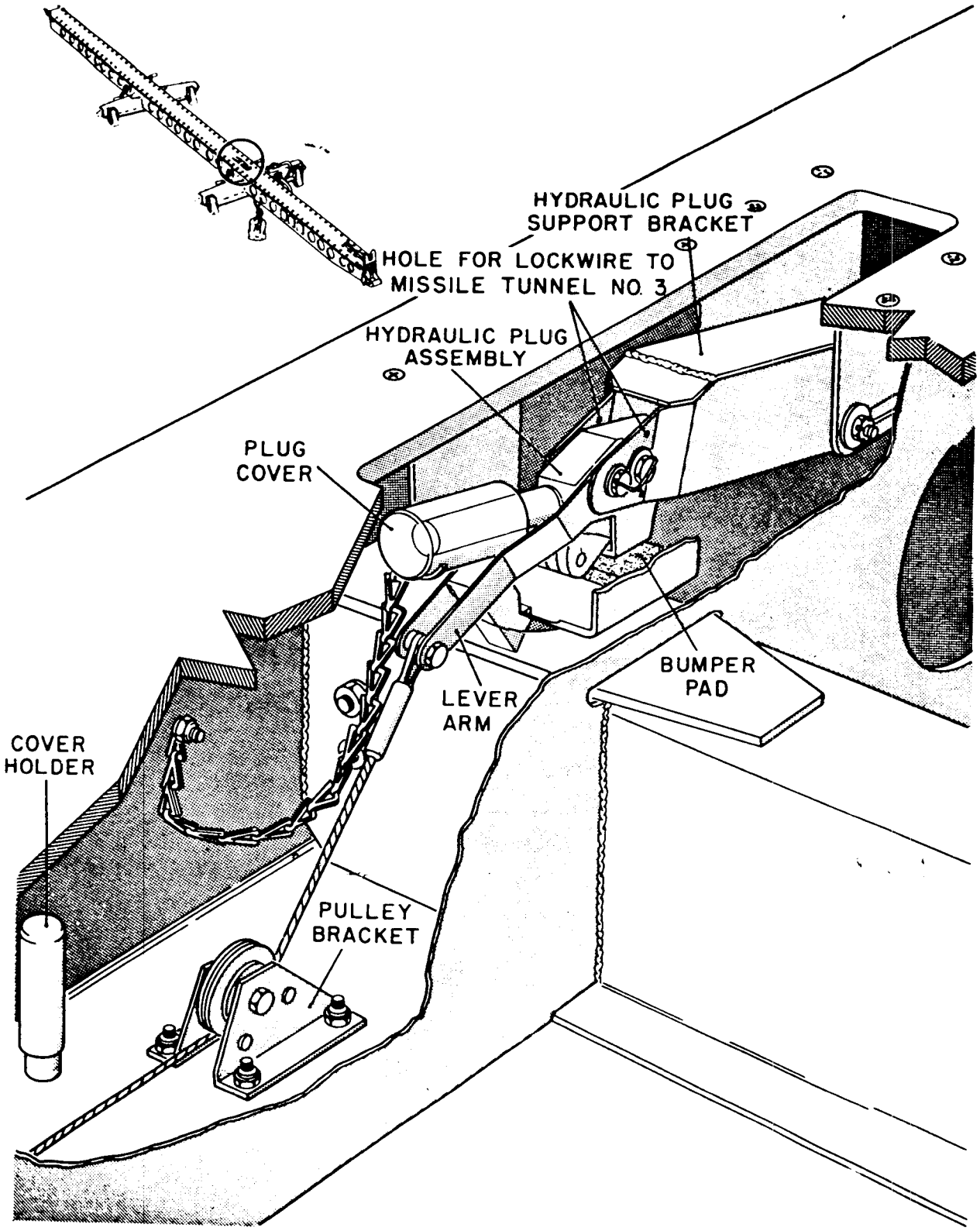


*Figure 167. Hydraulic plug retracted.*

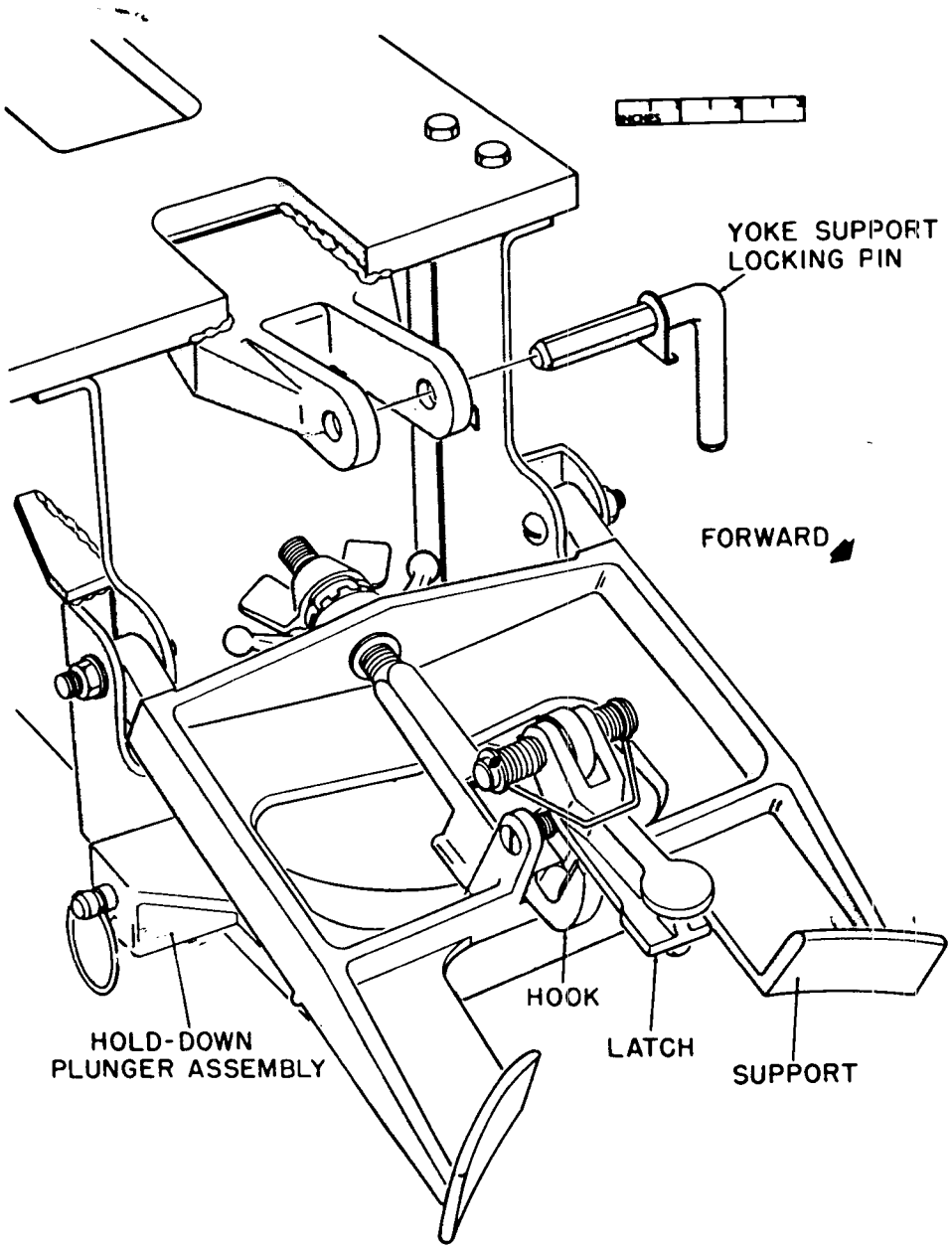


*Figure 168. Yoke support lowered.*

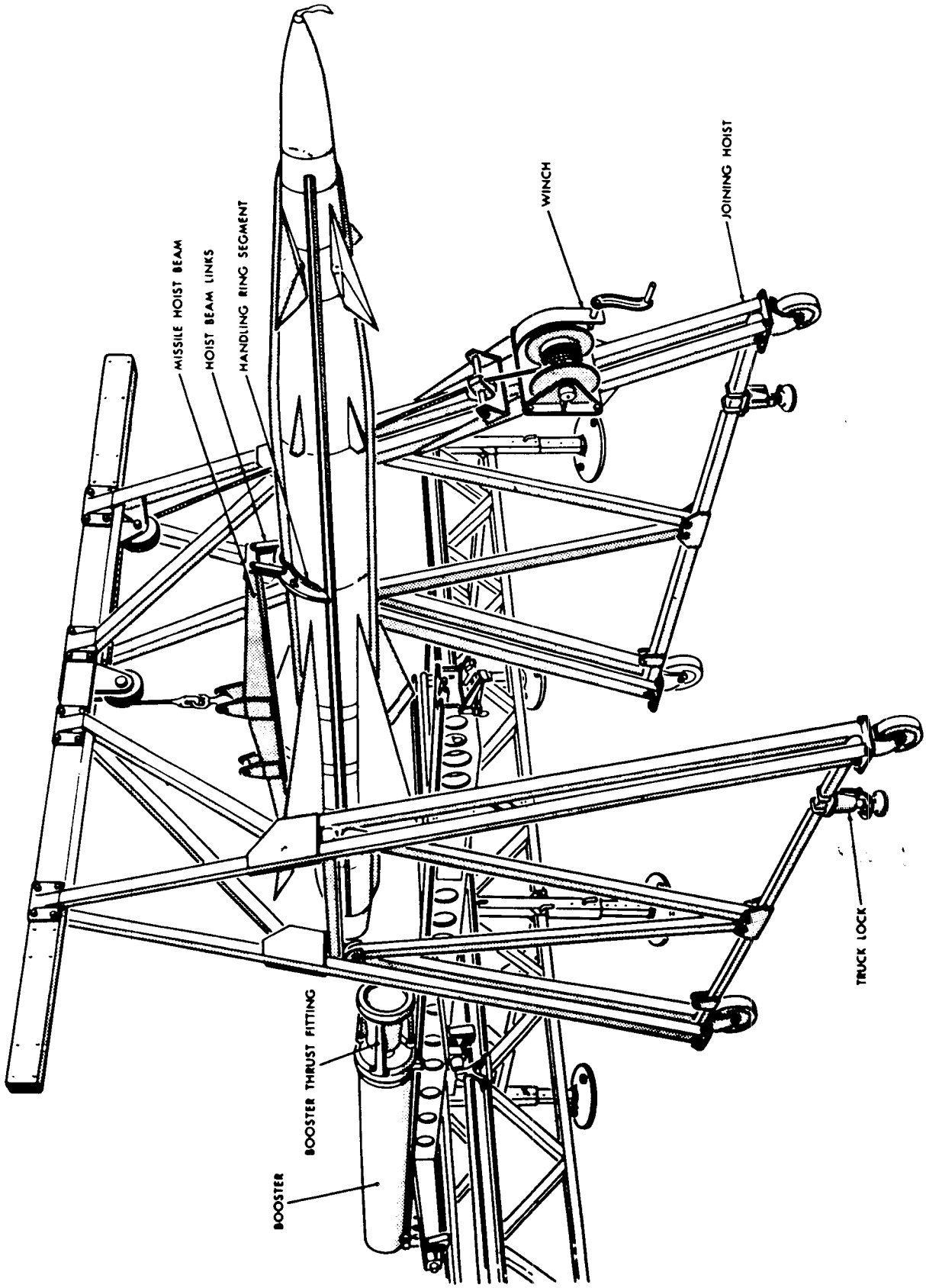


*Figure 169. Missile-booster joining.*

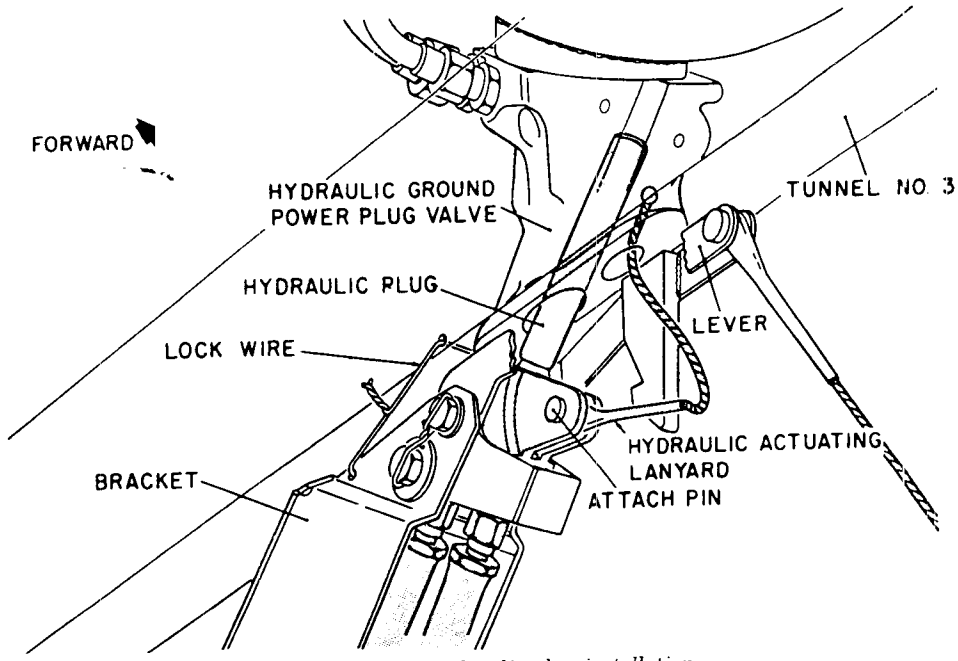


*Figure 170. Hydraulic plug installation.*

## Section IV. PROPELLANT SERVICING

### 251. Equipment

The fuel and acid filling operations utilize the missile transporter, the fuel servicer, the acid servicer, and associated equipment. The starting fluid filling operation utilizes the starting fluid syringe, or gravity feed, depending upon the kind of starting fluid being used. A crew is required for each operation as specified below. Though firefighting and medical aid personnel are not included in the drill, their presence with firefighting equipment, an ambulance, and appropriate medical supplies are indispensable and they will be present during all propellent servicing operations. An aspirator is provided to drain any excess acid from the missile. Instructions for using are provided with the aspirator.

### 252. Transporter

The fuel and acid filling operations require that the missile transporter be driven onto the appropriate (fueling or acid filling) ramp and halted in the wheel slot provided so that the missile will be in at least a 5° noseup attitude. A ramp or ditch which raises the rear trailer wheels approximately 30 inches higher than the front wheels will give the 5° noseup position.

### 253. Fueling Drill

*a. Personnel.* The fueling operation requires a three-man crew. They are a crew chief, a hoist operator, and a fuel-line operator. The latter two crewmen are designated **1** and **2**, respectively. Prior to the arrival of the transporter-trailer, the fuel measuring can will be filled with the proper amount of fuel. When filling the measuring can, strain the fuel through a chamois. This will be done by the above two crewmen in the fuel storage area. Protective clothing is not required, but normal safety precautions for the handling of gasoline will be adhered to. The measuring can is filled to the reading on the sight gage corresponding to the temperature of the fuel as indicated by the thermometer on the fuel can. When filled, the fuel can is returned to the fueling area and placed on the storage rack. If the fueling is the responsibility of the battalion assembly and service section, fueling personnel will be from that section. If it is done by firing battery personnel, personnel from the launching section will be designated as crew chief and 1 and 2 crewmen on the fueling crew.

*b. Drill.* When the officer in charge orders PREPARE FOR FUELING, the crew chief takes

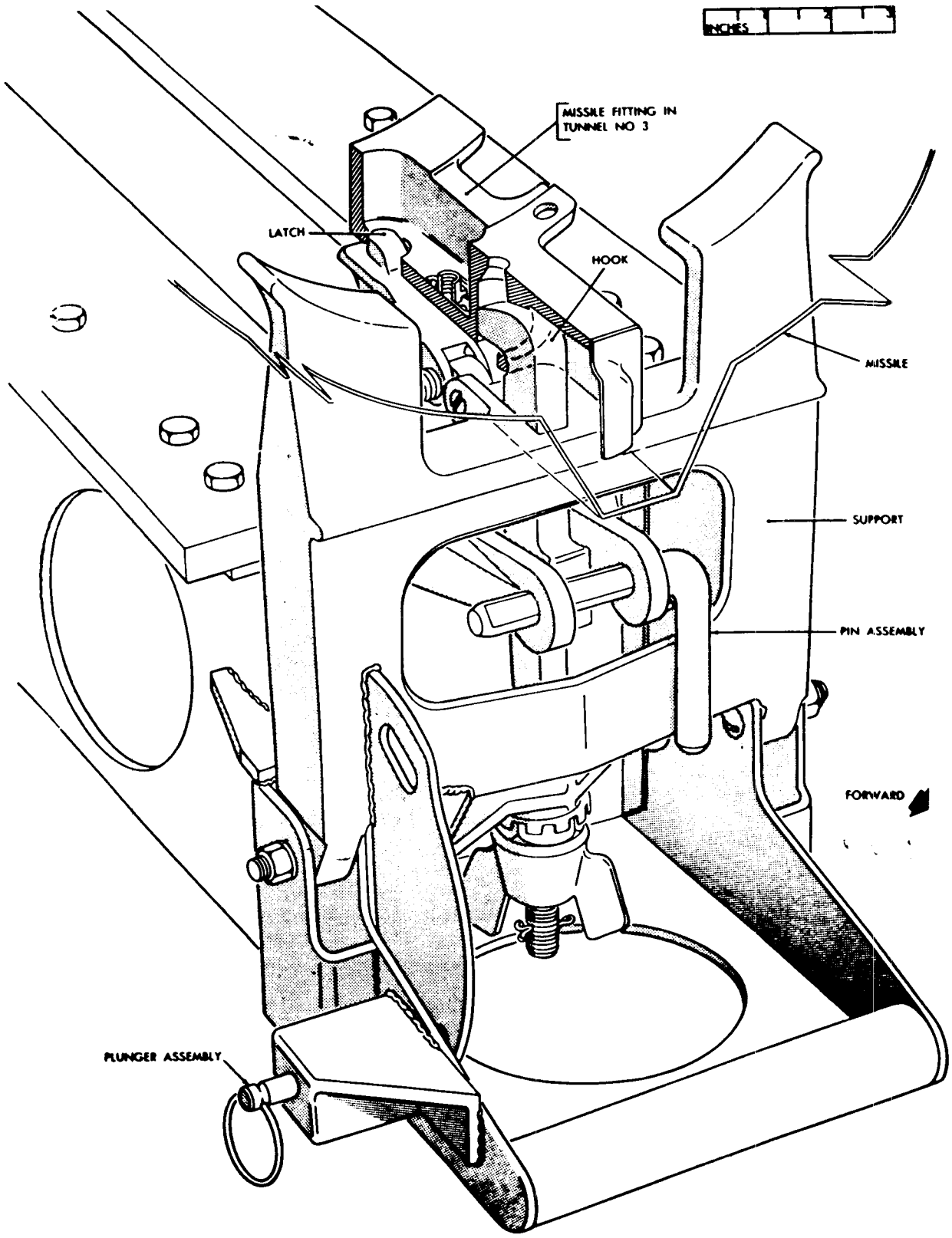


*Figure 171. Yoke support installed.*

charge of the fueling crew and controls their actions by the following commands.

## 254. Fueling Crew, Fall In

To assemble the crew, CS commands FUELING CREW, FALL IN. Fueling crew falls in at close interval on the left side of the fuel servicer with 1 nearest the hoist. The hoist crank is on the rear of the hoist. Left and right are designated while standing at the crank facing the hoist.

## 255. Count Off

The crew being assembled, CS commands COUNT OFF.

Fueling crew reports in order: 1, 2.

## 256. Call Off

The crew being assembled, CS commands CALL OFF.

1 reports SERVICER OPERATOR.

2 reports FUEL LINE OPERATOR.

## 257. Inspect Equipment

The crew being assembled, CS commands INSPECT EQUIPMENT.

1 checks the servicer for proper operation, checks the fueling tools, and stands by to report.

2 secures the fuel line and vent adapter, inspects them for damage and for tightness of connections on the fuel line, inspects the fuel measuring can for the proper amount of fuel, and stands by to report.

## 258. Report

When the crew has finished its inspection, CS commands REPORT.

1 reports SERVICER AND TOOLS IN ORDER.

2 reports FUEL LINE AND FUEL CAN IN ORDER.

## 259. Prepare To Fuel

Having received the reports, CS commands PREPARE TO FUEL.

1 and 2 obtain the fuel can and fasten it on the fuel servicer platform.

CS supervises towing the transporter-trailer in the proper position for fueling and connects the ground wire from the transporter-trailer to the ground post. He then assists 1 and 2 in the following steps as necessary.

1 and 2 position servicer beside transporter.

1 sets the brake on servicer and raises the servicer platform to the level of the trailer bed.

2 obtains the fuel line and vent adapter, mounts the trailer bed, removes the fuel vent plug, installs the vent adapter, removes the fuel filling plug, insures the old gasket and teflon stopper have been removed and new ones installed.

1 attaches the fuel line to the fuel can.

2 installs the teflon stopper on the stud in the nozzle orifice, unscrews the nozzle plunger knob until the threads are disengaged and the spring catch prevents further backward movement. He clips the nozzle ground wire to the propulsion arming lanyard stud, then installs the nozzle in the fuel filler hole, and secures it tightly with the wing nut. To insure proper grounding, insert the booster end of the propulsion arming lanyard into its hole on the thrust structure (fig. 153).

1 opens the fuel can valve and raises the servicer platform to its uppermost position.

2 observes the transparent fuel line. When all air bubbles have risen to the fuel can, he reports PREPARED TO FUEL.

After receiving the report above, CS commands COMMENCE FUELING (fig. 172).

2 depresses the spring catch button, pulls the nozzle valve handle to its fully open position, and observes the fuel flow through transparent hose for air bubbles. If air bubbles are seen, he closes the nozzle valve until all the bubbles rise to the fuel can, and then reopens the valve. When the top of the fuel column is seen entering the transparent line, the nozzle valve is closed rapidly, and the valve is then reopened carefully to allow the top of the column to drop within two inches of the nozzle end of the transparent tube (to the marker); the nozzle valve is then plunged to its fully down position and the handle is screwed down the remainder of the way to seat the teflon sealing plug.

2 then reports FUELING COMPLETE.

*Note.* During the fueling procedure 1 must be alert to LOWER SERVICER and 2 to CLOSE NOZZLE if ordered to do so. In addition, **both** of these actions will be taken instantly at the command CEASE FUELING without further command.

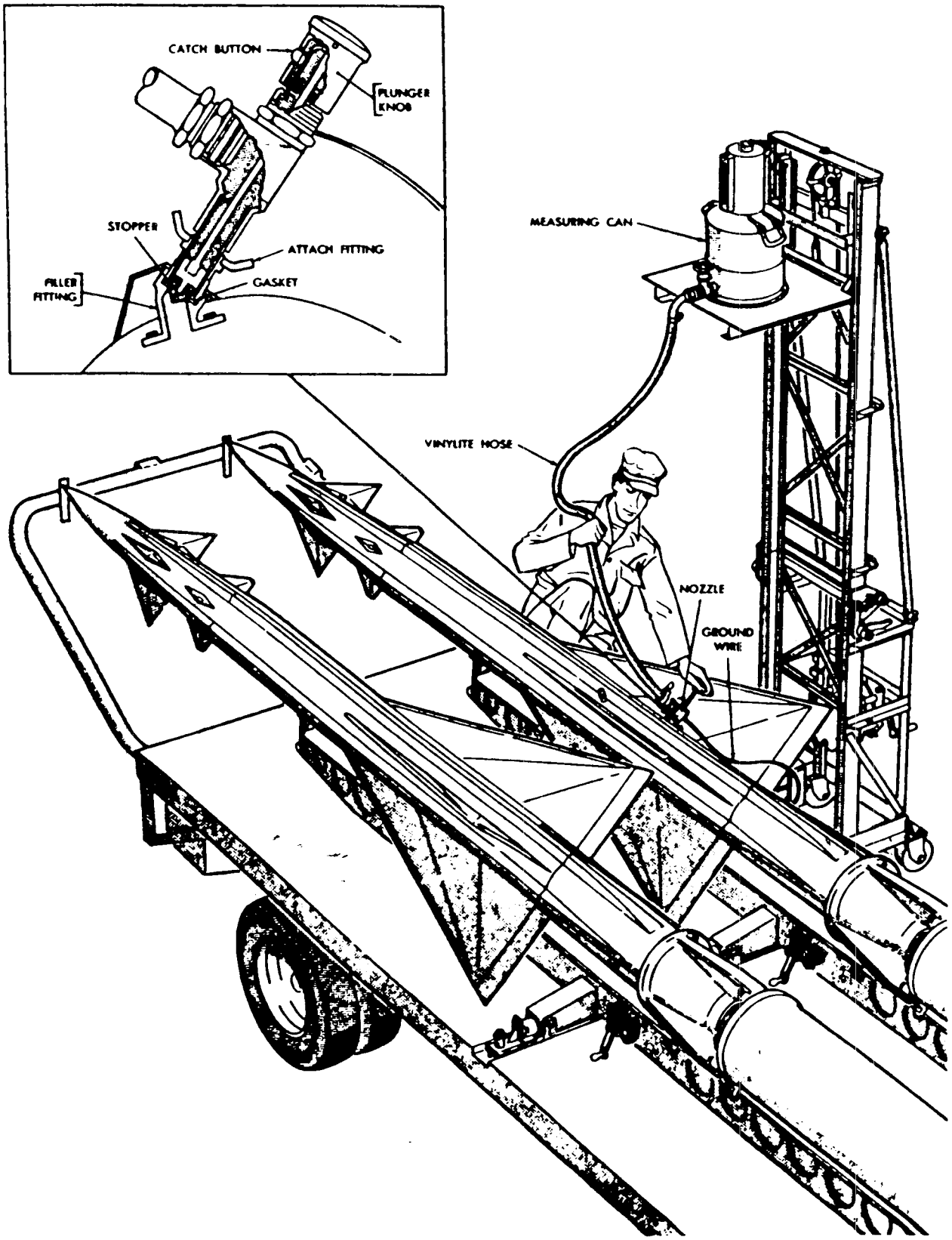


*Figure 172. Fuel filling.*

## 260. Remove Equipment

Having received the report fueling complete, CS commands REMOVE EQUIPMENT.

**1** lowers the servicer platform until it is about one foot below the trailer bed.

**2** agitates the fuel line to drain any remaining fuel into the can.

**2** removes the fuel line from the fuel filling hole, removes the ground wire from the propulsion arming lanyard (this must be done *after* the nozzle has been removed), removes the propulsion arming lanyard from the thrust structure, hands the nozzle to **1**, installs the fuel filler plug, removes the vent adapter, installs the vent plug, and removes the tools from trailer and places them in the tool cabinet. **1** takes the fuel line and nozzle from **2** and lowers the servicer platform all the way down.

**1** and **2** tip the can to remove any fuel remaining in the line, and then remove the fuel can from the servicer platform.

**1** closes the fuel can valve, detaches the fuel line from fuel can, and places the fuel can in the storage rack.

**2** hangs the fuel line on the draining post to drain.

When the fuel line is dry, he closes the ends of the line with the caps provided to prevent any foreign material from getting into the line. He then places the line in the storage cabinet.

**1** detaches the hoist ground wire and places it in the storage cabinet.

**2** detaches the trailer ground wire and places it in the storage cabinet.

**1** and **2** push the fuel servicer away from the trailer.

**1** reports EQUIPMENT CLEAR.

The crew chief directs movement of transporter-trailer to the acid filling area.

## 261. Acid Filling Procedure

*a. Crew.* The acid-filling operation requires a 5-man crew made up of a crew chief and 4 crewmen. The four crewmen are the servicer operator, assistant servicer operator, acid line handler, and vent line handler, designated **1** to **4**, respectively. Prior to the arrival of the round on the transporter-trailer, the drum of acid will be brought from the acid storage area to the acid-filling area.

*b. Safety.* Red fuming nitric acid used in the Nike missile is extremely destructive to wood, cloth, and flesh. It is likely to cause fire upon contact with wood and cloth. The fumes are very toxic if breathed. Prescribed safety precautions must be observed during the handling of acid drums and the acid-filling operation.

*c. Protective Clothing.*

(1) Personnel involved in the acid-filling operation must wear complete sets of protective clothing. At least one man, not a part of the acid-filling crew, is required to assist crew members in donning the protective clothing.

(2) Normally personnel will not be required to remain in a complete set of protective clothing more than 15 minutes. In extremely hot weather this time will be reduced to 10 minutes. If no difficulty is encountered in the acid-filling operation, the length of time required to complete the acid-filling procedure will not exceed 10 minutes for a well-trained crew. Before crews attain the necessary proficiency it may be necessary to have two additional men standing by in protective clothing, less hoods and gloves, to relieve the men in protective clothing who are working on the trailer. These relief-crew members will don hoods and gloves prior to relieving those already in complete sets of protective clothing. Additional men are not required to relieve the servicer operator since an assistant servicer operator is available to do this after the acid filling has actually started.

(3) No jewelry, wristwatches, identification tags, bracelets, rings, or any metal object, or clothing, other than underwear, will be worn beneath the protective clothing.

*d. Area.* The area must be clearly marked. Personnel not required in the procedure will not be permitted in the area during the acid-filling operations. A wind vane is desirable to make possible the determination of an upwind position from the acid-filling equipment and/or operation.

*e. Decontamination.* Decontamination of equipment is accomplished by use of copious amounts of water and/or a saturated bicarbonate of soda solution, both of which must be available in the acid-filling area.

*f. Drill.* When the officer in charge commands PREPARE FOR ACID FILLING, the crew chief takes charge of the acid-filling crew and controls their actions by the following commands.

## 262. Acid-Filling Crew, Fall In

To assemble the crew, **CS** commands ACID-FILLING CREW, FALL IN.

Acid-filling crew falls in at close interval on the left side of the acid servicer in order (**1, 2, 3, 4**) with **1** nearest the hoist. Left is determined as in fueling drill. At this time the wearing of protective clothing is not necessary.

## 263. Count off

The crew being assembled, **CS** commands COUNT OFF.

Acid-filling crew reports in order: **1, 2, 3, 4.**

## 264. Call Off

The crew being assembled, **CS** commands CALL OFF.

**1** reports SERVICER OPERATOR.

**2** reports ASSISTANT SERVICER OPERATOR.

**3** reports ACID-LINE HANDLER.

**4** reports VENT-LINE HANDLER.

## 265. Inspect Equipment

The crew being assembled, **CS** commands INSPECT EQUIPMENT.

**1** and **2** check the operation of the servicer, inspect the tools required for opening the acid drum and attaching the drain and fill assembly to the acid drum, and stand by to report.

**3** secures the drain and fill assembly and the vent adapter, removes the cover caps, inspects the lines and adapter for damage and proper assembly of all parts (with special attention given to the condition of the vinylite transparent tube segment and its associated clamps), places them on the bed of the trailer when it is in position, and stands by to report.

**4** assists in the inspection of the tools required at the missile for the acid-filling operation, obtains and checks the vinylite apron or splash plans, places this equipment on the bed of the trailer when it is in position, and stands by to report.

## 266. Report

After the equipment has been inspected, **CS** commands REPORT.

**1** reports SERVICER AND TOOLS IN ORDER.

**2** reports DRAIN AND FILL ASSEMBLY in ORDER.

**3** reports FILL LINE AND ADAPTER IN ORDER.

**4** reports APRON (OR PANS) AND TOOLS IN ORDER.

## 267. Prepare Equipment

(fig. 173)

***Warning:*** If missile is contaminated, put on protective clothing.

The reports being received, **CS** commands PREPARE EQUIPMENT.

**1** and **2** position the acid servicer beside the trailer. **1** sets the brake on the hoist.

**3** and **4** mount the trailer bed and position the vinylite apron or splash pans on the missile.

**4** removes the vent plug from the missile, installs the vent adapter, and checks to see that the teflon washer is in place.

**3** installs the hexagonal nuts to secure the apron or splash pans to the missile, removes the filling plug from the missile, and insures the new gasket and teflon stopper have been inserted.

**3** installs the teflon stopper on the stud in the nozzle orifice while **4** holds the nozzle.

**3** unscrews the nozzle handle until the threads are disengaged and the handle is kept from further movement by the spring catch, attaches the nozzle to the acid-filler hole in the missile, and tightens the wing nut. **The acid-fill nozzle has left-hand threads.**

**4** installs the vent line to the vent adapter.

**3** insuring that the hoist is near its proper position beside the trailer, reports EQUIPMENT PREPARED.

*Note.* Up to this time, the drum of acid has not been touched by any crew member even though the drum is in the acid-filling area.

## 268. Prepare for Filling

Having received the report equipment prepared, **CS** commands PREPARE FOR FILLING.

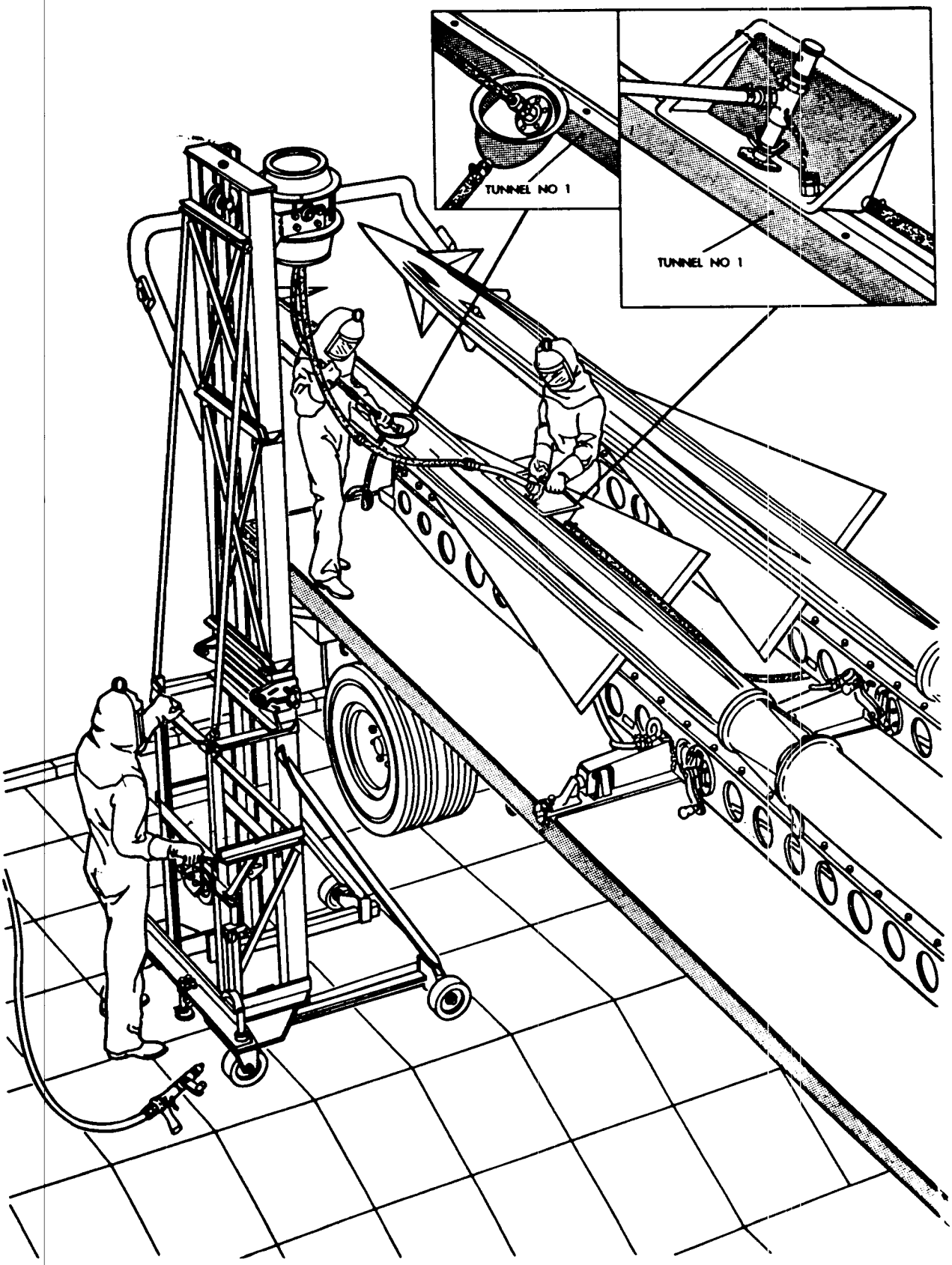


*Figure 178. Acid filling.*

**1, 2, 3,** and **4** don complete suits of protective clothing. At least one additional man, not a part of the acid-filling crew, will be required to assist the crew in donning the suits of protective clothing.

**1** and **2** secure a drum of acid, position it inside the open clamping rings on the servicer, clamp the drum in the rings, and position the servicer beside the trailer.

**1** sets the brake on the hoist.

**1** removes the bung from the acid drum using the bung wrench provided.

***Caution:*** Remove the bung slowly until it is certain all pressure is released. Stand on the upwind side when removing the bung.

**2** secures the drain and fill assembly, closes the globe valve on the vent line, and hands the assembly to **1**.

**1** inspects the assembly to insure that the teflon washer is in place, inspects the end of the vent probe to insure that it is open and contains no foreign material, inserts the vent probe all the way into the acid drum, and checks by feel to see that the probe is not touching the bottom of the drum. He then tightens the union with the acid-drum wrench.

**1** reports READY TO WEIGH DRUM.

## 269. Weigh Drum

At the discretion of the commanding officer this step may be omitted after the crew is well trained.

Having received the report ready to weigh drum, **CS** commands WEIGH DRUM.

**1** raises the acid drum (using the hoist crank) high enough so that the platform scale may be placed under the drum.

**2** positions the platform scales under the drum.

**1** lowers the drum on to the scale platform.

**1** and **2** release the clamping rings from the drum, insure that only the scale platform is supporting the drum, and weigh drum.

**1** reports WEIGHT ... POUNDS.

**CS** records this weight.

**1** and **2** fasten the clamping rings to the drum.

**1** reports READY TO FILL.

**2** leaves the immediate working area, is decontaminated, removes his hood and gloves only, and stands by to relieve **1** if required.

**3** and **4** mount the trailer bed.

*Note. a.* Beginning at this point there must be absolutely no conversation by any of the acid-filling crew members. Each must be alert to carry out any orders given by the crew chief. Particularly must **1** be alert to LOWER DRUM and **3** to CLOSE NOZZLE if ordered to do so. In addition, *both of these actions will be performed instantly* at the command CEASE FILLING without any further command. It must be remembered that while in protective clothing a man's vision is severely limited. Movement from one place to another must therefore be limited to actual requirements. The crew chief's attention must be on every man in order to anticipate difficulties and to see the need for emergency procedure. In event of an emergency the crew chief must be prepared to direct the attention of fire fighting and/or medical aid personnel as required.

*b.* The personnel on the trailer must be warned that in case they fall they must not grab for the acid or vent lines. The severing or breaking of these lines represents more danger to the personnel than a fall from the trailer bed.

**1** will stand by the servicer crank handle.

**3** and **4** will stand aft of the acid line, NOT between the acid and vent lines.

## 270. Raise Drum

When all men are in proper position the crew chief commands RAISE DRUM.

**1** starts raising the drum.

When the crew chief observes that the drum is at that height which permits **4** to reach the vent line valve without unnecessary stretching he orders STOP DRUM, COMMENCE FILLING.

**3** depresses the spring catch and retracts the nozzle handle to its fully open position. He directs his attention continuously to the transparent section of the acid line. After 10 seconds, **4** opens the vent globe valve and **1** raises the drum to its fully raised position. **3** continously observes the transparent section of the acid line. If large bubbles are seen he immediately closes the nozzle valve and **4** gently agitates the acid line to aid the bubbles in rising to the drum. When the acid line is again clear, **3** reopens the nozzle valve to continue the acid filling.

When the top of the column of acid enters the transparent section of the acid line,

the nozzle valve will be closed. **4** agitates the acid line to insure that the apparent top of the column of acid is not a large bubble. When it is assured that the top of the acid column is actually seen, **3** cautiously reopens and closes the nozzle valve to allow the top of the column of acid to lower slowly until the top of the column is within two inches of the nozzle end of the transparent section (to the marker). He then closes the nozzle valve quickly. **DO NOT SEAT THE TEFLON STOPPER AT THIS TIME.**

**3** reports ACID FILL COMPLETE.

*Note. a.* At this time, before the acid-filling hole is sealed, the acid drum may be weighed in order to determine the amount of acid which has been placed in the missile.

*b.* During the above acid-filling operation, if it is necessary to relieve any of the crew members because of the length of time in complete suits of protective clothing, the crew chief will order CLOSE NOZZLE. The standby crew will then take over. When the new crew is in position the crew chief will order OPEN NOZZLE. The acid filling will then continue as in COMMENCE FILLING.

**3** reports NOZZLE VALVE CLOSED.

## 271. Lower Drum

CS commands LOWER DRUM.

**1** releases the cable brake carefully and slowly lowers the acid drum on to the platform scale which was left in place after the preliminary weighing.

**3** supports the acid line above the nozzle so that the acid in the transparent section will not run back down the line to the drum as the drum is being lowered and supports the line in this manner during the entire weighing procedure.

**2** dons hood and gloves.

When the drum is all the way down on the platform scale, **2** reports DRUM DOWN.

## 272. Weigh Drum

This step will be omitted if the full drum was not weighed.

CS then commands WEIGH DRUM.

**1** and **2** release the clamping rings from the acid drum and position the servicer, as necessary, so that it is not supporting the drum in any way. The drain and fill assembly is not removed but is left attached to the drum.

**1** and **2** weigh the drum.

**1** reports WEIGHT ..... POUNDS

*Note.* The crew chief determines the difference between the initial and the final weights of the drum. If all the acid has been removed from the drum, the difference should be approximately 242 pounds. If all the acid has not been placed in the missile, the drum must be reattached to the clamping rings and raised again. Appropriate commands, beginning with RAISE DRUM will be used.

## 273. Seal Tank

If the calculations show that all of the acid has been placed in the missile, CS commands SEAL TANK.

**3** seals the tank on the missile by screwing the nozzle handle to its fully down position, thus seating the teflon sealing plug, and reports ACID TANK SEALED.

CS commands REMOVE EQUIPMENT.

**1** and **2** push the servicer away from the trailer.

**4** secures a container of soda solution from the decontamination area and remounts the trailer.

**1** and **2** remove the drain and fill assembly from the acid drum.

**3** removes the acid line from the acid-filling hole.

**4** decontaminates any acid spilled when the acid line was removed by **3**.

**1** replaces the bung in the acid drum, moves the acid drum to the decontaminating area, and returns to the trailer.

**3** hands the acid line to **2** and replaces the acid-filler plug in the missile.

**4** removes the vent line from the vent adapter, hands the vent line to **2**, removes the vent adapter and hands it to **2**, and replaces the vent plug in the missile.

**2** takes the drain and fill assembly and the vent adapter to the decontamination area and returns to the trailer.

**1** moves the platform scales away from the trailer.

**3** and **4** remove the vinylite apron or splash pans from the missile.

**1** collects all the tools and takes them to the decontamination area.

**2** takes the vinylite apron or splash pans to the decontamination area.

3 and 4 decontaminate any acid spilled on the missile or trailer.

1 and 2 take the platform scales to the decontamination area.

CS commands RELEASE BRAKE.

The driver releases the brake on the missile trailer and reports BRAKE RELEASED.

CS commands TRANSPORTER AWAY.

Driver tows the trailer out of the acid-filling area.

1, 2, 3, and 4 decontaminate all equipment in the decontamination area, hang the drain and fill assembly on the drain post, place the tools in the storage rack, and hang the vinylite apron or splash pans up to dry. When the drain and fill assembly is dry, 4 covers the ends of the assembly with the caps provided to prevent foreign material from entering the assembly, and then places the assembly in the storage cabinet.

1, 2, 3, and 4 are decontaminated.

The acid-filling crew removes all protective clothing and hangs all items up to dry.

## 274. Starting-Fluid (Aniline and Alcohol) Filling

*a. Crew.* The starting-fluid filling operation requires a 3-man crew consisting of a crew chief and 2 crewmen. The crewmen are a starting-fluid filler and an assistant starting-fluid filler, designated 1 and 2 respectively. This operation will be done when the missile is on the launcher-loader assembly. The drill prescribed is for inserting the aniline-alcohol starting fluid only. Later publications will prescribe the drill for inserting the unsymmetrical dimethyl hydrazine starting fluid.

*b. Safety.* Contact with the starting fluid or the breathing of its fumes is extremely dangerous. Therefore, prescribed safety precautions must be observed.

*c. Protective Clothing.* Protective hood, gloves, and boots must be worn at all times by personnel when inserting the starting fluid.

*d. Decontamination.* Decontamination of equipment is accomplished by the use of a 5 percent solution of acetic acid on the contaminated items and then washing them with copious amounts of water.

*e. Drill.* When the officer in charge commands PREPARE FOR STARTING FLUID FILLING, the crew chief takes charge of the starting-fluid filling crew and controls their actions by the following commands.

## 275. Starting Fluid Crew, Fall In

To assemble the crew, CS commands STARTING-FLUID CREW, FALL IN.

Starting-fluid crew falls in at close intervals parallel to the storage racks, and to the left side and at the nose of the missile to be serviced, with 1 nearest the missile. Since the starting-fluid filling operation requires such a short period of time the crew will be required to be in complete sets of protective clothing at the time they fall in.

## 276. Count Off

The crew being assembled, CS commands COUNT OFF.

Starting-fluid filling crew reports, in order: 1, 2.

## 277. Call Off

The crew being assembled, CS commands CALL OFF.

1 reports FILLER.

2 reports ASSISTANT FILLER.

## 278. Inspect Equipment

CS then commands INSPECT EQUIPMENT.

1 secures the filling syringe, inspects it for damage and to see that it is in proper working order, secures a rag saturated with the acetic acid solution, takes his position inside the storage racks beside the missile, and stands by to report.

2 secures a rag saturated with acetic acid solution, secures the bottle of starting fluid and places it inside the storage racks beside the missile and secures the screwdriver required to remove and replace the plugs from the starting-fluid line in the missile. He then takes his position inside the storage racks by the bottle of starting fluid and stands by to report. Rags, saturated with acetic acid solution, are carried by the two crewmen during the entire drill that follows and are used to immediately decontaminate any starting fluid that is spilled.

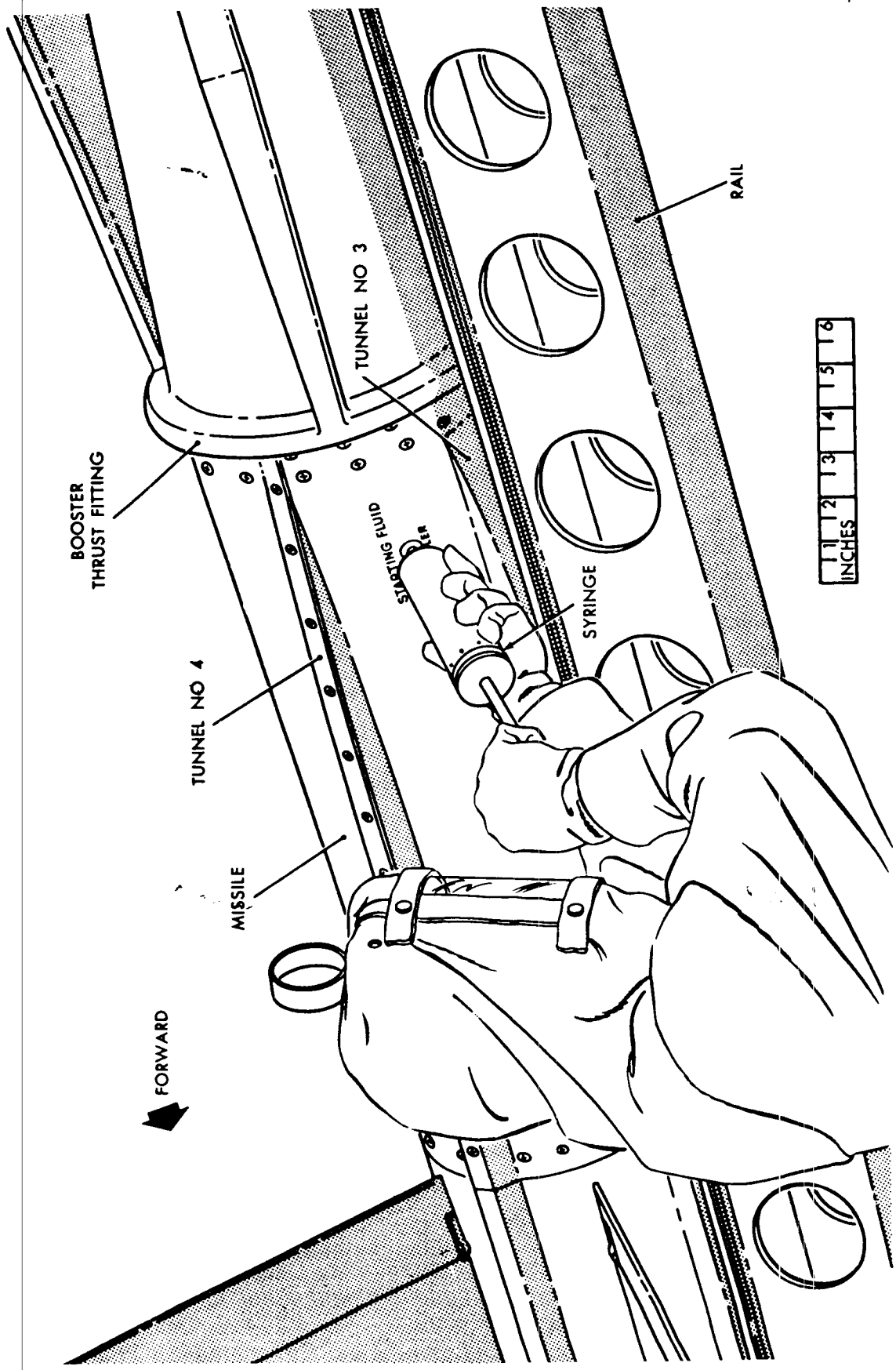


*Figure 174. Inserting starting fluid.*

## 279. Report

As soon as CS observes the crew is ready to proceed, he commands REPORT.

1 reports SYRINGE IN ORDER.

2 reports STARTING FLUID AND TOOLS IN ORDER.

## 280. Prepare To Fill

Having received the report, CS commands PREPARE TO FILL.

2 removes the starting-fluid-line vent plug and hands the screwdriver to 1.

1 removes the starting-fluid-line filler plug.

2 removes the cap from the starting-fluid bottle and stands by to hold the bottle while the syringe is filled.

1 holding the syringe piston all the way in, inserts the nozzle into the bottle. When filling the syringe, keep the end of the syringe nozzle just below the level of the starting mix in the bottle.

1 using a slow steady pull on the knob, fills the syringe while 2 tilts the bottle, as necessary, to insure that the syringe obtains the maximum amount of starting fluid. 1 then reports PREPARED TO FILL.

***Caution:*** As soon as the syringe is filled it must be tipped upward quickly and thereafter carried with the **TIP UP** to prevent any leakage.

## 281. Insert Fluid

(fig. 174)

CS commands INSERT FLUID.

1 inserts the syringe nozzle into the starting-fluid filling hole and SLOWLY pushes the knob all the way in.

1 removes the syringe nozzle from the filler hole, installs the filler-hole plug, and decontaminates any fluid spilled.

2 installs the vent-hole plug and decontaminates any fluid spilled.

1 reports FILLING COMPLETE.

## 282. Clear Equipment

CS commands CLEAR EQUIPMENT.

2 carries the screwdriver and starting-fluid bottle to the decontamination area.

1 carries starting-fluid syringe to the decontamination area, reporting EQUIPMENT CLEAR as he leaves the storage racks.

1 flushes the starting-fluid syringe with ethyl alcohol and then replaces the syringe in its storage box.

2 decontaminates the screwdriver and replaces it in the storage box.

1 and 2 decontaminate each other's protective clothing by sponging down the suits with rags saturated with acetic acid solution.

1 and 2 spray each other with copious amount of water.

1 and 2 remove their protective clothing and hang it up to dry.

1 disposes of the near-empty container in accordance with local SOP.

## 282.1. UDMH Starting Fluid Filling

*a. Use.* Paragraphs 274 to 282, inclusive, describe the drill for servicing the missile with analine-alcohol starting fluid. Paragraphs 282.1 to 282.7, inclusive, describe the drill when UDMH is used as the starting fluid. UDMH will be used only on those missiles having the words O. K. FOR U. D. M. H. stenciled above the starting fluid filler plug.

*b. Equipment* (fig. 174.1)

(1) *Container.* UDMH starting fluid will be received in aluminum container, packed four to a carton. Each aluminum container contains the required amount of UDMH to service one missile. Packed with each carton of four containers is a transfer tube assembly. The individual containers have a protective aluminum cap or seal over a selfsealing rubber stopper. The rubber stopper has two holes into which the two spikes of the transfer tube assembly are inserted when the UDMH is put into the missile. Near the bottom of the container is a handle. The container turns upside down when lifted with this handle, allowing the contents to drain into the missile.

(2) *Transfer tube assembly.* The transfer tube assembly consists of a hose, spike assembly, and filling probe. It connects between the missile and the UDMH container. The short spike and hose connect to the filler probe which is inserted into the missile. UDMH flows through this spike and its associated hose and filler probe into the missile. The exposed end of the longspike is covered with a red rubber vent cap which, when

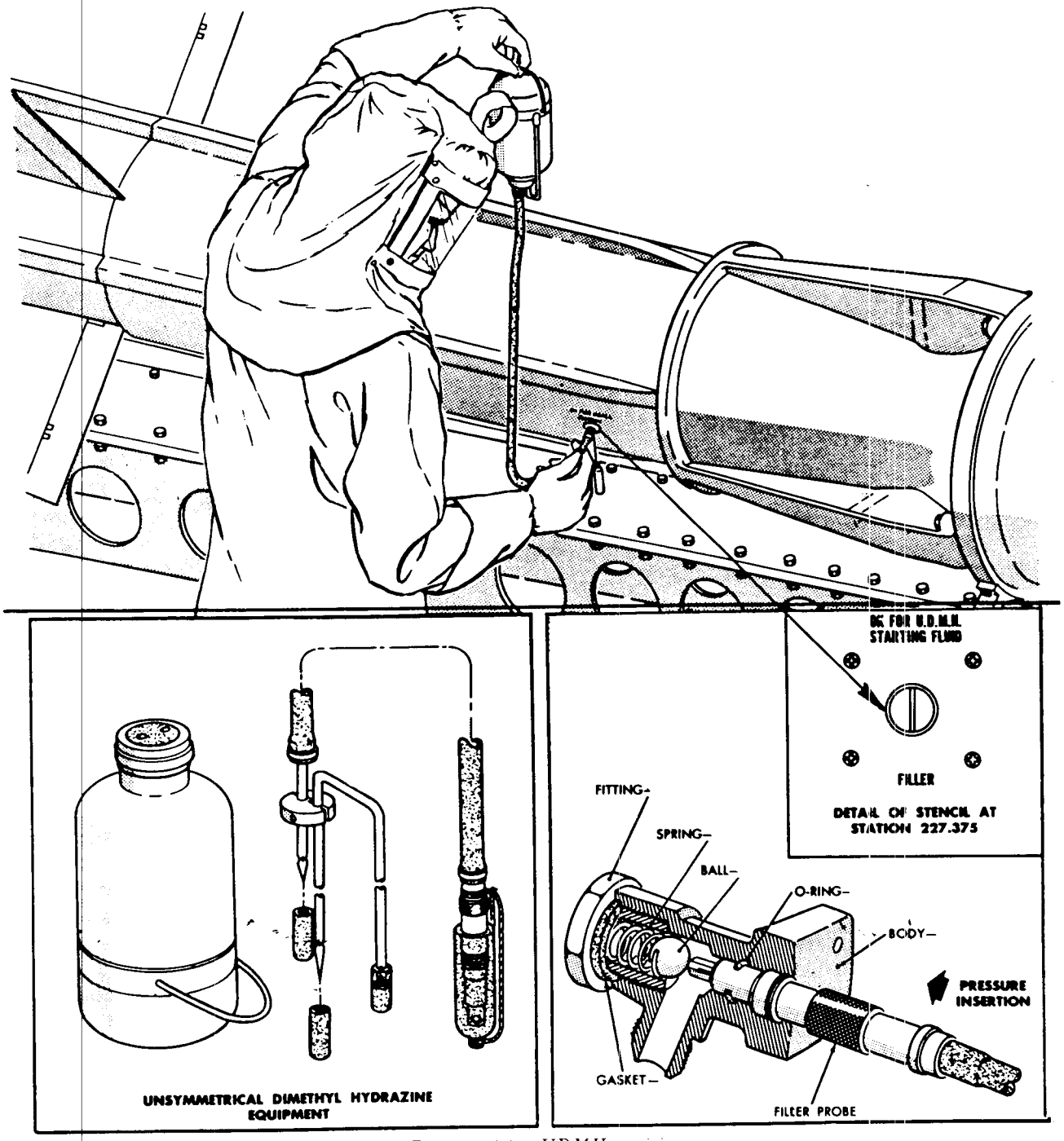


*Figure 174.1. UDMH servicing.*

opened, controls the gravity flow of the UDMH into the missile after the container is raised above the level of the filler valve.

(3) *Filler probe.* The connection between the short spike and hose and the missile is called the filler probe. It is inserted into the starting fluid filler valve. The probe contains an internal poppet valve. When the probe is inserted and tightened in the filler valve, the poppet valve is opened and allows the UDMH to flow through the probe and into the missile. However, when the probe is loosened, but not removed from the filler valve, the poppet seats itself and stops the flow of the UDMH either into or out of the missile.

(4) *Protective clothing.* Protective hoods, gloves, and boots must be worn by servicing personnel whenever the UDMH container is opened. Any spillage should be immediately neutralized with copious amounts of water or alcohol. The affected area should also be decontaminated with large amounts of sodium bicarbonate or boric or mild acetic acid.

***Warning:*** DO NOT USE NITRIC OR CHROMIC ACID FOR NEUTRALIZING ANY SPILLAGE.

## 282.2. Sequence

UDMH starting fluid will be put in after the missile is loaded on the launcher-loader assembly. The missile will be elevated 5°, using the LOP controls.

## 282.3. Crew

A three-man crew is required, a chief of section (CS), a starting-fluid filler (No. 1), and a vent man (No. 2).

## 282.4. Fall In, Count Off

See paragraphs 275 and 276.

## 282.5. Inspect Equipment

CS commands INSPECT EQUIPMENT.

1 secures the UDMH container and the transfer tube assembly, inspects them for serviceability, and makes sure the rubber cap on the vent tube is fully closed. He then places the container on a flat surface downwind from and near the starting fluid filler valve and stands by to report.

2 secures the necessary tools to remove the starting fluid filler valve cap and the vent cap, insures the decontaminating materials are close by, and stands by to report.

## 282.6. Report

CS commands REPORT as soon as he sees 1 and 2 have examined the equipment.

1 reports CONTAINER AND TRANSFER TUBE IN ORDER.

2 reports TOOLS AND DECONTAMINATION MATERIAL IN ORDER.

## 282.7. Filling

CS commands FILL after having received the reports in paragraph 282.6.

All men put on protective clothing.

1 removes the starting fluid filler cap.

2 removes the vent plug.

CS inspects the filler port to make sure that it is properly fitted with teflon seals.

1 inserts the filler probe into the filler fitting and screws it securely into place.

2 removes the aluminum seal from the container and lifts the cap off to expose the selfsealing rubber stopper.

1 removes the protective covers from the long and the short spikes of the transfer tube assembly. Do not move the red rubber cap on the vent tube to the open position at this time.

1 inserts the long spike of the transfer tube assembly into one of the openings of the rubber stopper. Push the spikes all the way into the tube stop, guiding the short spike through the other opening in the stopper. 2 steadies the container to prevent spillage.

After checking that the tube stop is flush against the bottle stopper, 1 inverts the container and holds it by the handle as high as the hose will permit without kinking.

1 moves the red vent cap to the open position (do not remove completely) to allow the fluid to drain into the missile.

During the insertion of the starting fluid, 2 holds a folded dry cloth over the vent and watches for a spot of starting fluid on the cloth. Should this occur, 2 will immediately tell 1 to lower the container.

When the container is empty (approx 30 seconds) 1 moves the red vent cap back to the closed position and continues to hold the container in a raised position.

2 then unscrews the metal filler probe of the transfer tube assembly to allow the valve to seat itself. *Do not remove the filler probe.*

1 then lowers the container to allow any fluid in the transfer tube assembly to drain back into the container.

2 removes the filler probe from the filler valve, and replaces the filler valve and vent plugs.

1 removes the spike assembly from the container and caps the spikes and probe.

1 and 2 decontaminate any spillage.

**1** and **2** remove the container transfer tube assembly, and tools to the decontamination area, and decontaminate the equipment and the protective clothing.

**CS** lowers the missile.

**CS** and **1** flush the starting fluid line with dry air (25 psi) (or nitrogen, if available). The propulsion plumbing test compressor may be used as a source of dry air.

***Caution:*** STAND CLEAR OF THE VENT PORT UNTIL THE LINE IS COMPLETELY DRIED.

**1** removes the air supply line.

**CS, 1** and **2** decontaminate the missile, launcher area, tools, equipment, and protective clothing.

## Section V. EXPLOSIVE COMPONENTS

### 283. Sequence

*a. General.* The final step in missile assembly is the installation of the explosive components. These include the 2 arming mechanisms, the 5 detonating cords, and the 3 warheads. The detonating cord from the five-way connector to the arming mechanisms will NOT be connected to the arming mechanisms in the assembly and test area. This will be done when the round is on the launcher-loader assembly.

*b. Uncrating Warheads.* During propellant servicing, **1,** assisted by **4** and **5,** will uncrate and prepare the warheads for installation. The initiators may not be installed in the warheads when they are received.

*c. Supporting the Missile.* When the center warhead cover is removed for warhead installation, the forward section of the missile must be supported just forward of the waveguides by an improvised support. Install the warheads with the missile on the transporter-trailer. The warheads may be manually lifted, using the warhead-handling yoke. At underground installations the davit is used in conjunction with the warhead-handling yoke.

### 284. Detonating Cord Installation

(fig. 176)

The detonating cords are normally installed in the missile prior to missile-booster joining and prior to the time the warheads are installed. The procedure is given in this chapter for continuity reasons.

***Warning:*** THE PETN RELAY CAPS MUST BE TAPPED AT ALL TIMES EXCEPT WHEN ACTUALLY INSTALLED IN THE WARHEADS, ARMING DEVICES, OR 5-WAY CONNECTOR.

**6** and **7** remove tunnel No. 4.

**1** and **8** remove the center and aft warhead section covers.

**1** connects the aft warhead detonating cord to the 5-way connector (fig. 175) by inserting the PETN relay cap end into the 5-way connector. The Nos. 1 and 5 connections on the 5-way connector go to the arming mechanisms, No. 2 goes to the nose warhead, No. 3 to the center warhead, and No. 4 to the aft warhead.

*Note.* Turn the five-way connector approximately one-quarter of a turn counterclockwise before installing detonating cords.

**6** runs the aft warhead detonating cord along tunnel No. 4 back to the aft warhead section. He secures the cord with the 14 holding clips on the hydraulic line in tunnel No. 4, coils the excess cord, secures it in the aft warhead section, and tapes the free end to the warhead-mounting bracket in a protected position.

**1** attaches the remaining detonating cords except the one for the nose warhead (No. 2) to the five-way connector, coils the excess cord and the nose warhead cord, and places them in the center warhead section. The relay caps in the five-way connector should be touching when viewed through the viewing window in the connector. All detonating cord connectors of the five-way connector should be tightened only fingertight. **DO NOT USE A WRENCH TO TIGHTEN THE CONNECTORS.** The PETN relay caps are made of a thin metal and are easily damaged. If damaged, they must be replaced. The free end of the center warhead detonating cord should be taped to the mounting bracket in a protected position. The free ends of the detonating cords going to the arming mechanisms should be fastened in the clips provided.

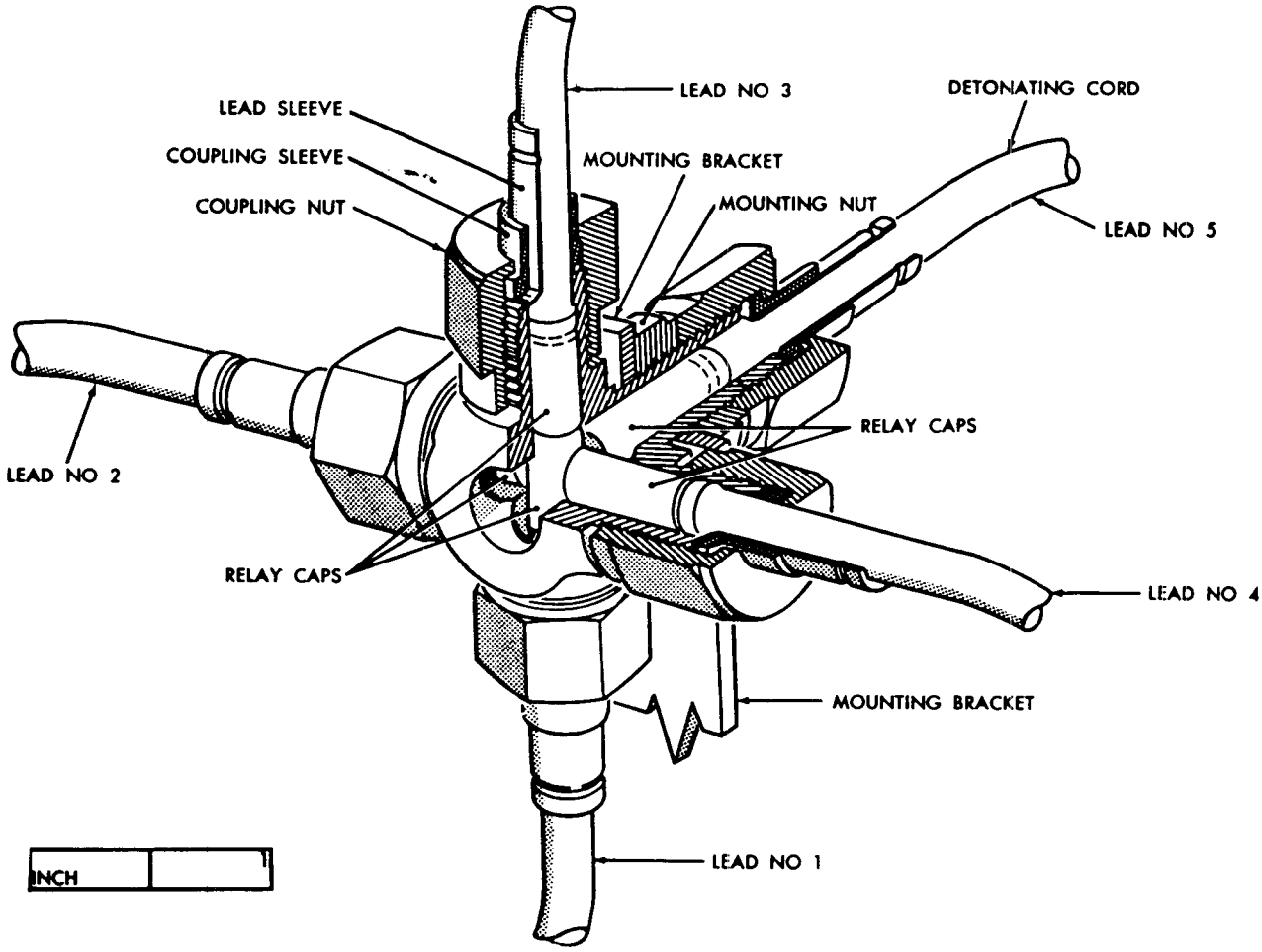


*Figure 175. Five-way connector.*

## 285. Installing the Arming Mechanisms (fig. 177)

1 insures the arming mechanisms read SAFE.

1 removes the safety wire and makes a continuity check on the arming mechanisms.

6 and 7 remove the arming mechanisms support brackets from the missile.

1 removes the wing nut that holds the inertia weight in place during transit.

1 removes the flat-headed screws from the base of the arming mechanisms.

1 connects the wires to the arming mechanisms as shown in paragraph 285.1.

6 and 7 fasten the arming mechanisms to the two support brackets, and reinstall the brackets in the missile. DO NOT CONNECT THE DETONATING CORDS TO THE ARMING MECHANISMS.

## 285.1. Arming Mechanism Connections

*a.* Verify the SAFE position of both arming mechanisms, using a blasting galvanometer only. All checks should show open CIRCUIT readings on blasting galvanometer—

(1) Check for no circuit continuity between terminals N and A.

(2) Check for no input short between terminal A and detonating cord fittings.

(3) Check for no-ground short between terminal N and detonating cord fitting.

*b.* Remove arming mechanisms brackets from center warhead section and mount arming mechanism thereon.

*c.* Connect wire N151A20 or N151K20 to terminal N of right arming mechanism.

*d.* Connect wire A90G20 or A90M20 to terminal A of right arming mechanism.

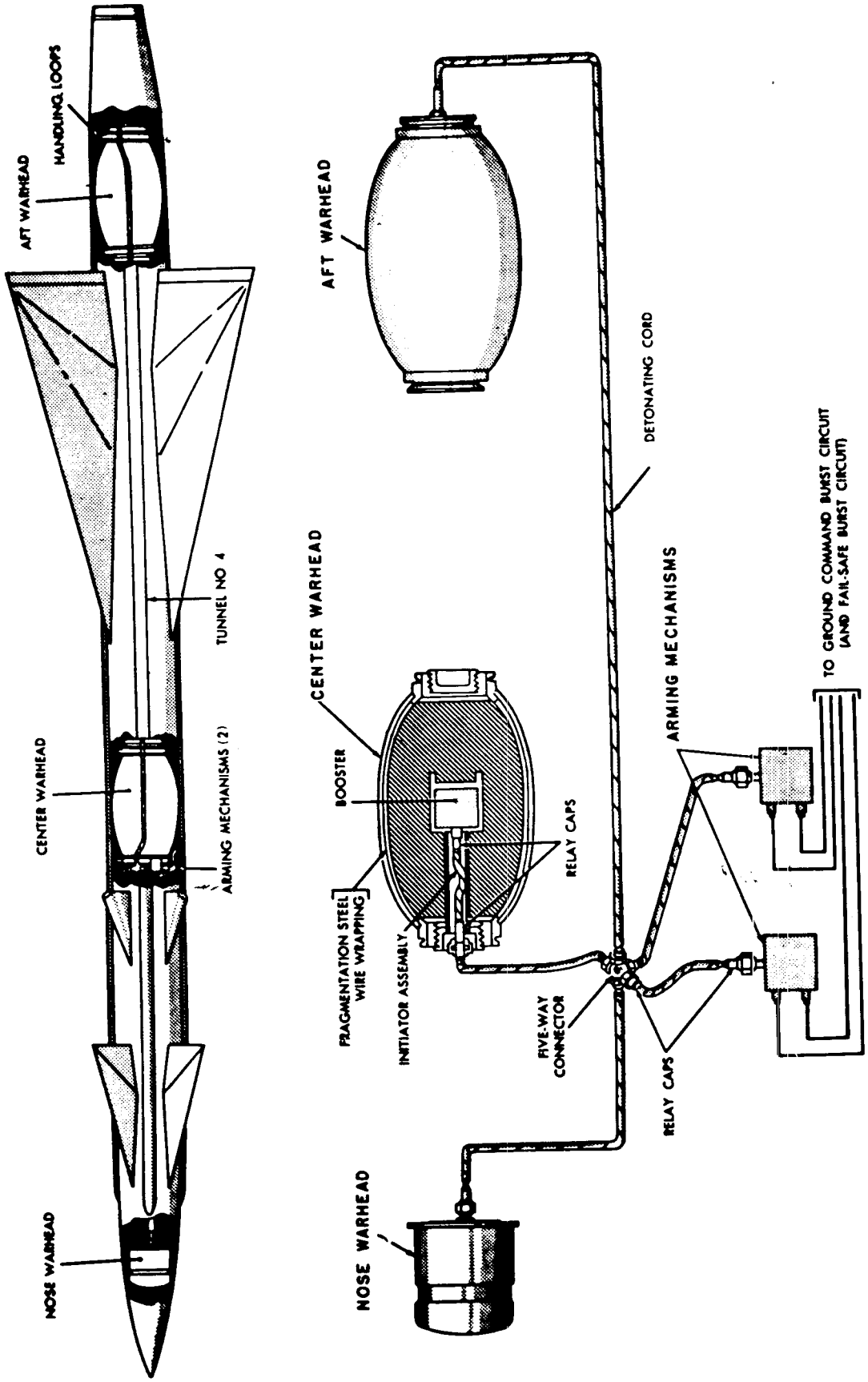


*Figure 176. Detonating cords.*

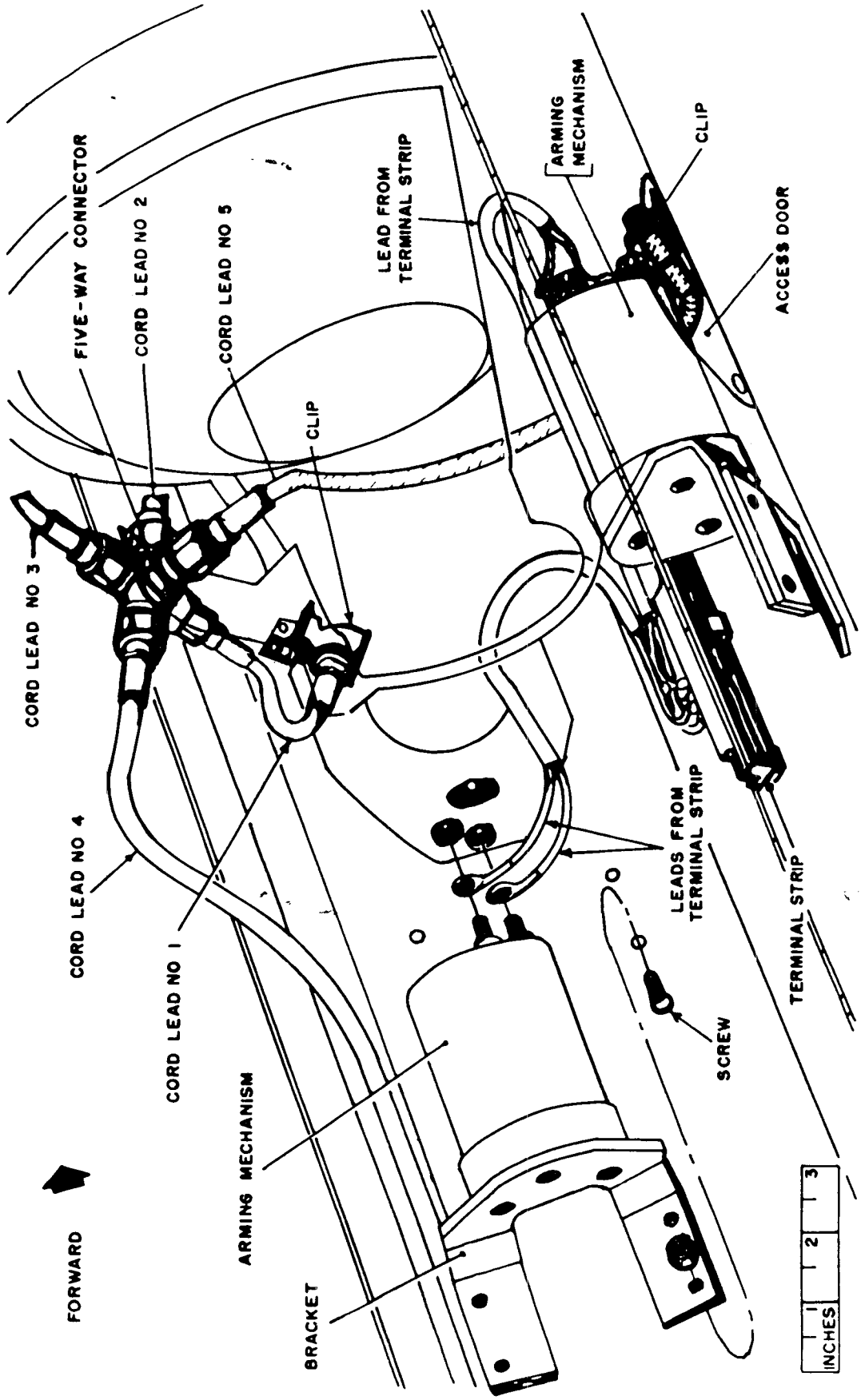


*Figure 177. Installing arming mechanisms.*

*e.* Connect wire N151B20 or N151J20 to terminal N of left arming mechanism.

*f.* Connect wire A90E20 or A90L20 to terminal A of left arming mechanism.

*g.* Install both arming mechanism assemblies in center warhead section.

*h.* Install detonating cord 4 into right receptacle of 5-way connector. Verify correct length to aft warhead, and attach to clips along hydraulic fluid pressure line in tunnel 4 and to clips in the aft warhead section.

## 286. Preparing for Nose Warhead Installation

**6** places and adjusts the nose support under the missile just forward of the waveguides.

**6** and **7** remove the four forward tunnels.

**6** disconnects the stagnation air-pressure tube in tunnel No. 3 at the aft end of the nose section.

While **8** holds the nose section, **6** and **7** loosen the bottom bolt and remove the other three bolts holding the nose section to the steering fin control section. After the bolts are removed **8** lifts the warhead nose section free of the missile.

## 287. Installing the Nose Warhead

(fig. 178)

**1** uncoils the nose warhead detonating cord from the center warhead section of the missile.

**6** removes the rubber grommet from the nose section.

With the nose section horizontal, **6** removes the three screws holding the warhead retaining ring to the nose casting and pulls out the retaining ring and ballast plates.

**6** inserts the nose warhead into the nose section until the warhead rests against the nose base.

**6** connects the detonating cord to the nose warhead initiator by means of the coupling nut.

**6** inserts the detonating cord through the hole in the ballast plate assembly and retaining ring.

***Caution:*** TIGHTEN ONLY FINGERTIGHT.

**6** inserts the warhead retaining ring and ballast assembly into the nose and fastens the retaining ring to the nose casting.

**6** feeds the detonating-cord lead out through the hole in the nose casting and then installs the split rubber grommet over the lead and forces the grommet back into the hole.

Assisted by **1** and **7**, **6** attaches the nose section to the missile. Torque to 19 inch-pounds using a 3-inch adapter on the torque wrench.

**6** connects the stagnation air-pressure tube in tunnel No. 3.

**1** secures the detonating cord lead in the four holding clips in tunnel No. 4 and fastens it in the five-way connector.

## 288. Aft Warhead Installation

(figs. 179 and 180)

**2** installs the aft warhead initiator in the aft warhead as follows: Loosen the wing nut which holds the retaining plate to the warhead. Rotate the retaining plate 180°.

Remove the shipping plug.

Remove any of foreign material in the initiator opening in the warhead.

Insert the initiator into the warhead.

Rotate the retaining plate 180° and fasten with the wing nut.

*Note.* The aft warhead initiator is 6 inches long and the center warhead initiator is 9 inches long.

**7** positions the detonating cord so that the warhead can be inserted.

**7** and **8** attach the warhead handling yoke to the aft warhead lifting rings, close the guards over the hooks, and lock the guards in place with the safety pins.

**7** and **8** lift the warhead, lower it into the aft warhead section with the initiator end to the rear (toward the motor), and remove the warhead handling yoke.

**7** positions the warhead with the index slots and installs and torques the holddown lugs. Torque to 50 to 70 inch-pounds. Install the detonating cord in the aft warhead.

## 289. Center Warhead Installation

(fig. 181)

Prior to the installation of the center warhead, the installation of the detonating cord connections between the five-way connector and the two arming mechanisms (terminals 1 and 5) should

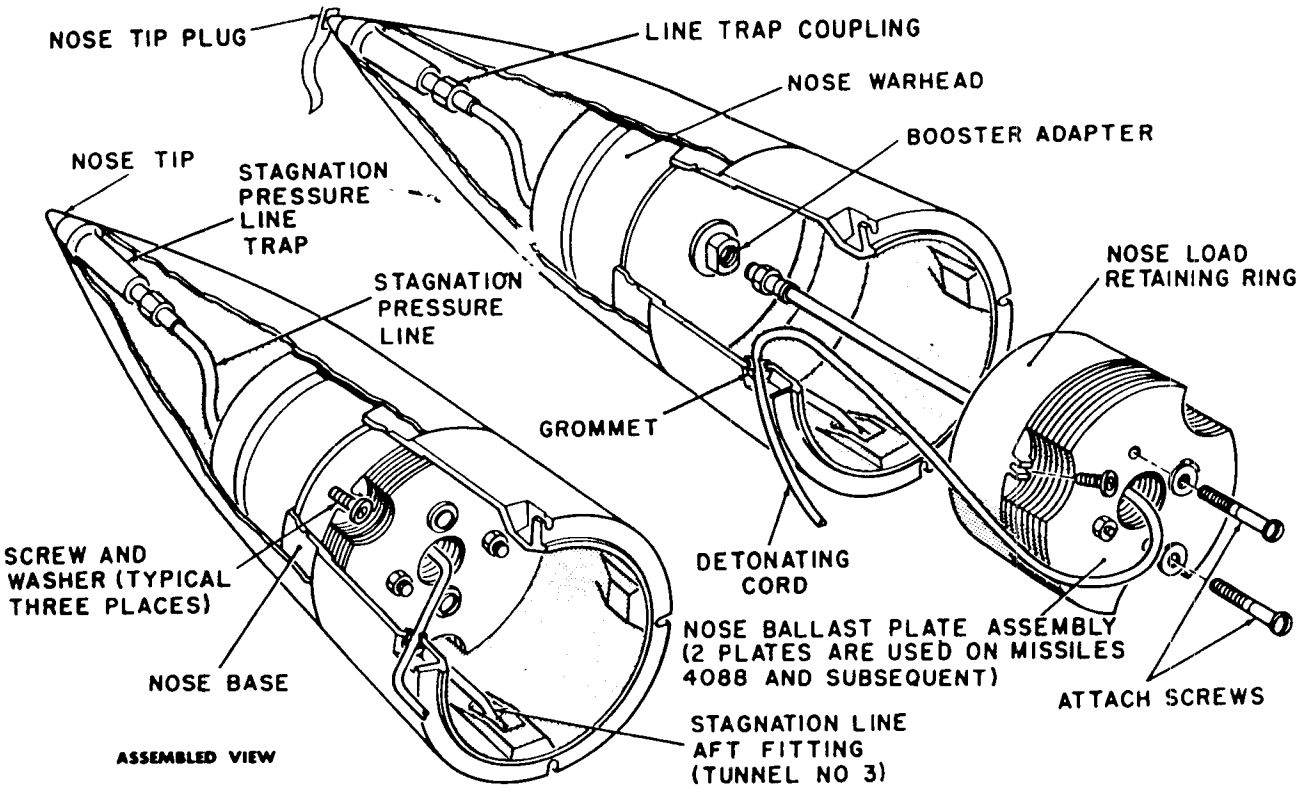


*Figure 178. Installing nose warhead.*

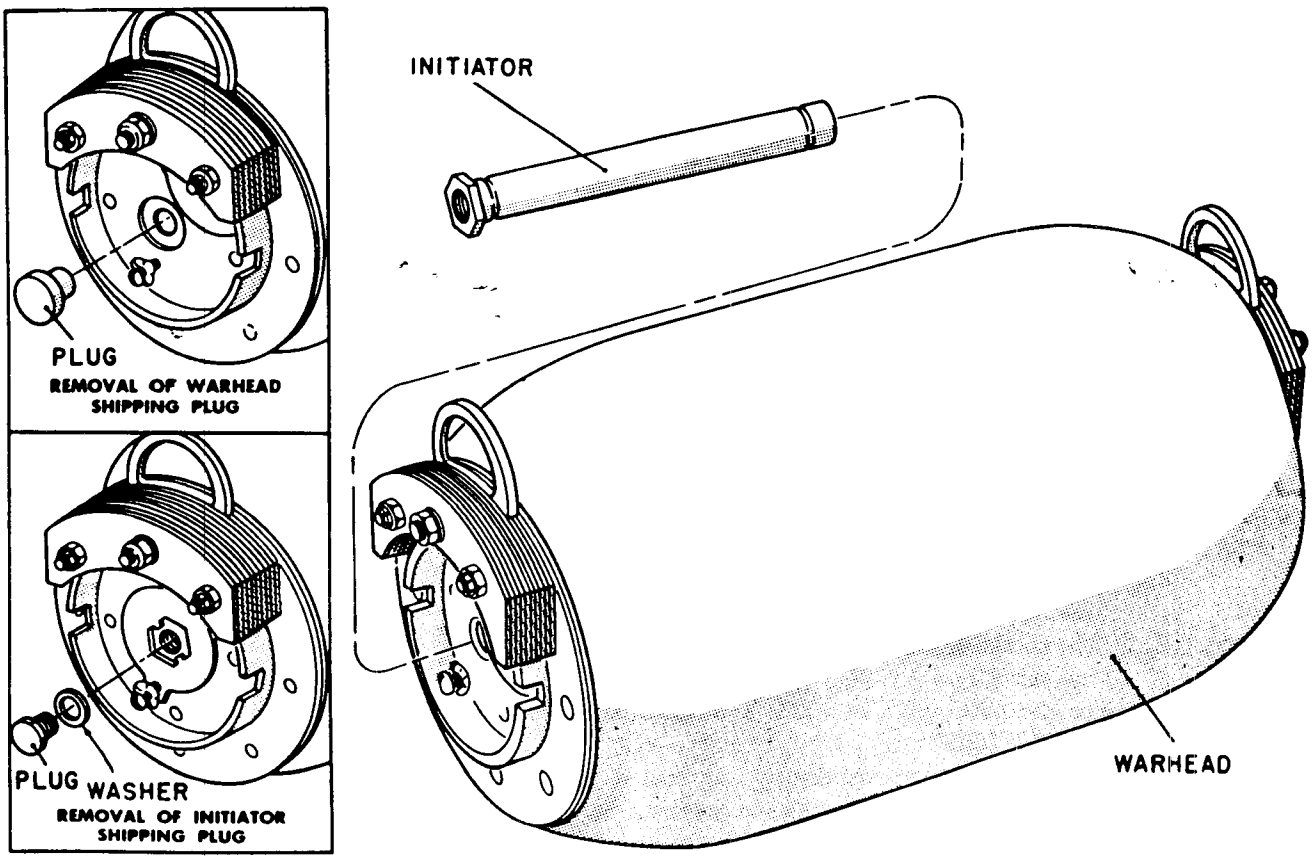


*Figure 179. Warhead initiator.*

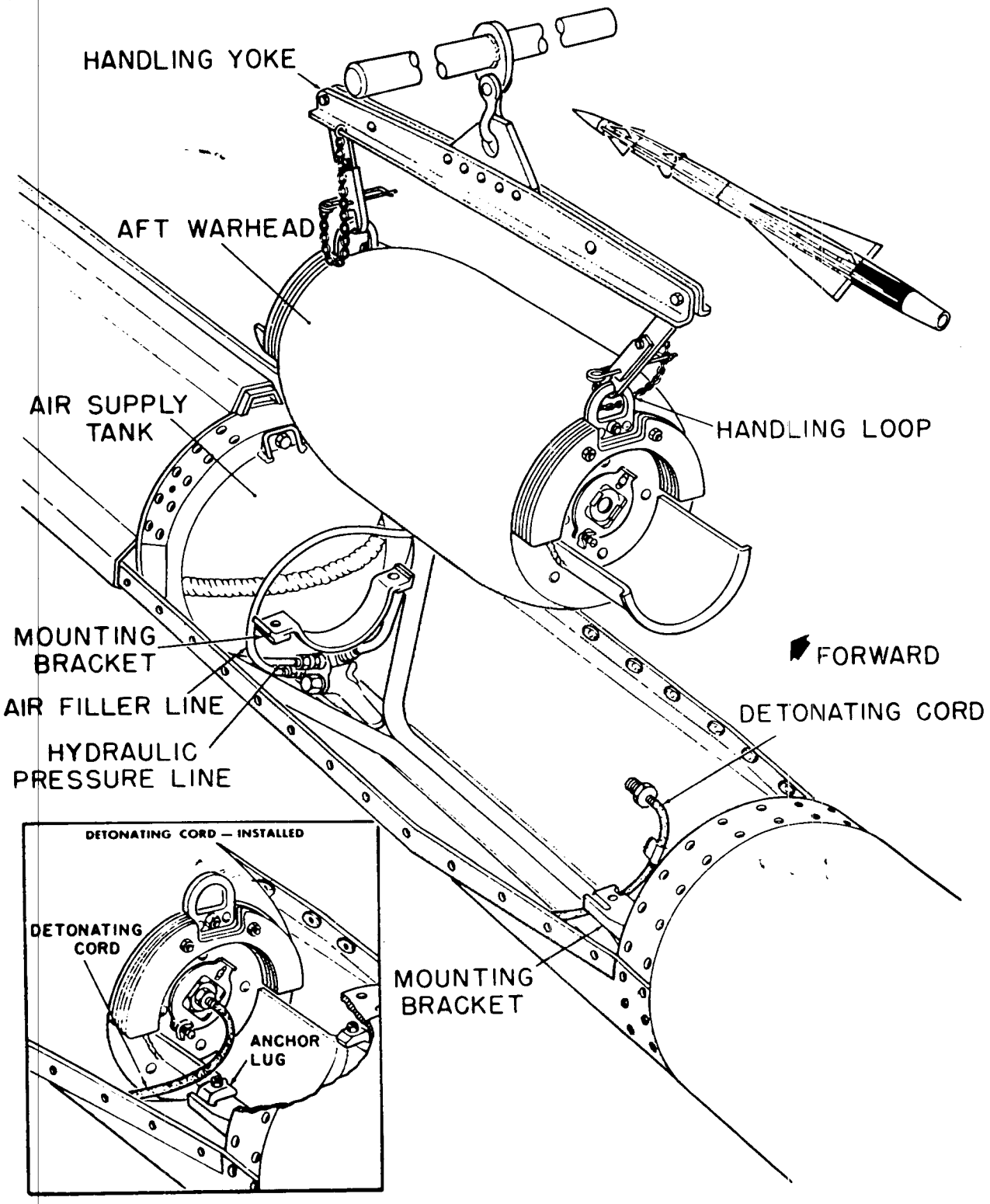


*Figure 180. Aft warhead installation.*

be checked. These cords are short and their routing is critical. Connect the detonating cord to each arming mechanism. Insure that each cord is long enough to attach easily to its arming mechanism without placing any strain on the cord. After this check, disconnect the detonating cord from each arming mechanism and fasten the cords in the clips provided. 2 will make this check while 7 and 8 complete the installation of the aft warhead.

8 installs and tightens the center warhead initiator. This initiator is installed in the same way as the aft warhead initiator.

*Note.* The center warhead initiator is 9 inches long.

7 and 1 install the right forward holddown lugs.

7 and 8 attach the warhead handling yoke to the center warhead lifting rings, close the guards over the hooks, and lock the guards in place with the safety pins.

7 and 8 lift the warhead, lower it into position in the center warhead section with the initiator end forward (toward the missile nose), and remove the handling yoke.

7 installs and torques the holddown lugs. Torque to 50 to 70 inch-pounds. It is advisable to install the issued support strut over the center warhead section to insure uniform torqueing of all bolts.

8 connects the detonating cord to the center warhead. Clip the extra length of cord to the clips provided. TIGHTEN ONLY FINGERTIGHT.

1 checks the detonating cords for routing, proper insertion, proper securing in the holding clips, the absence of kinks or sharp bends, and that the cords are not touching.

## 290. Missile Completion

6, 7, and 8 install the four forward tunnels and the center and aft warhead covers. They then remove the forward support.

CS inspects the round to insure all assembly procedures were properly accomplished.

## 291. Connecting Arming Mechanisms

*a.* This will be accomplished at the launching section with the round on the launcher-loader assembly. The chief of the launching section will designate the person to connect the arming mechanisms.

*b.* Insure each arming mechanism reads SAFE.

*c.* Remove each arming mechanism access cover.

*d.* Make the connection between each arming mechanism and the detonating cord. TIGHTEN ONLY FINGERTIGHT.

*e.* Replace the arming mechanism access covers.

## 292. Installing Booster Igniter

(fig. 182)

*a. Responsibility.* The booster igniter will be inserted into the booster by the senior launcher crewman while the round is on the launcher-loader assembly. Before an igniter is installed, the booster wiring will be given a continuity check by the senior launcher crewman. The procedure for installing the booster igniter is given here for reasons of continuity.

*b. Procedure.*

Carefully remove the igniter from its container. Remove any thread protector remaining on the igniter.

Remove the plastic shipping plug from the head of the booster. Use the special igniter-spanner wrench.

Carefully insert the igniter into the booster head. Tighten the igniter with the spanner wrench.

Insure that the shorting plug is installed in the connector on the wiring at the nozzle end of the booster.

Remove the shorting plug from the igniter harness and connect the booster-wiring plug to the igniter-harness plug.

***Warning:*** The booster continuity check will never be performed after the booster igniter is installed and connected.

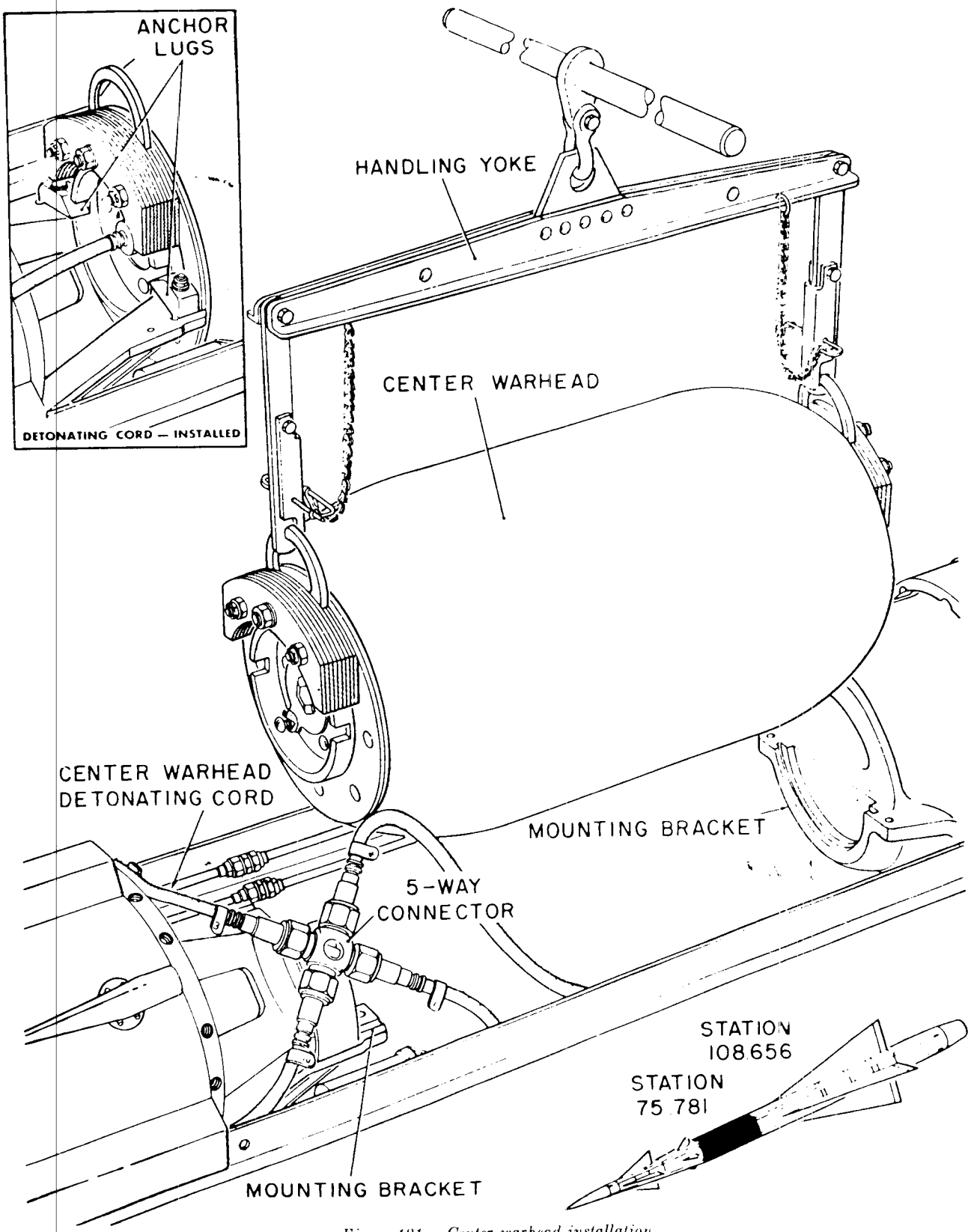


*Figure 181. Center warhead installation.*

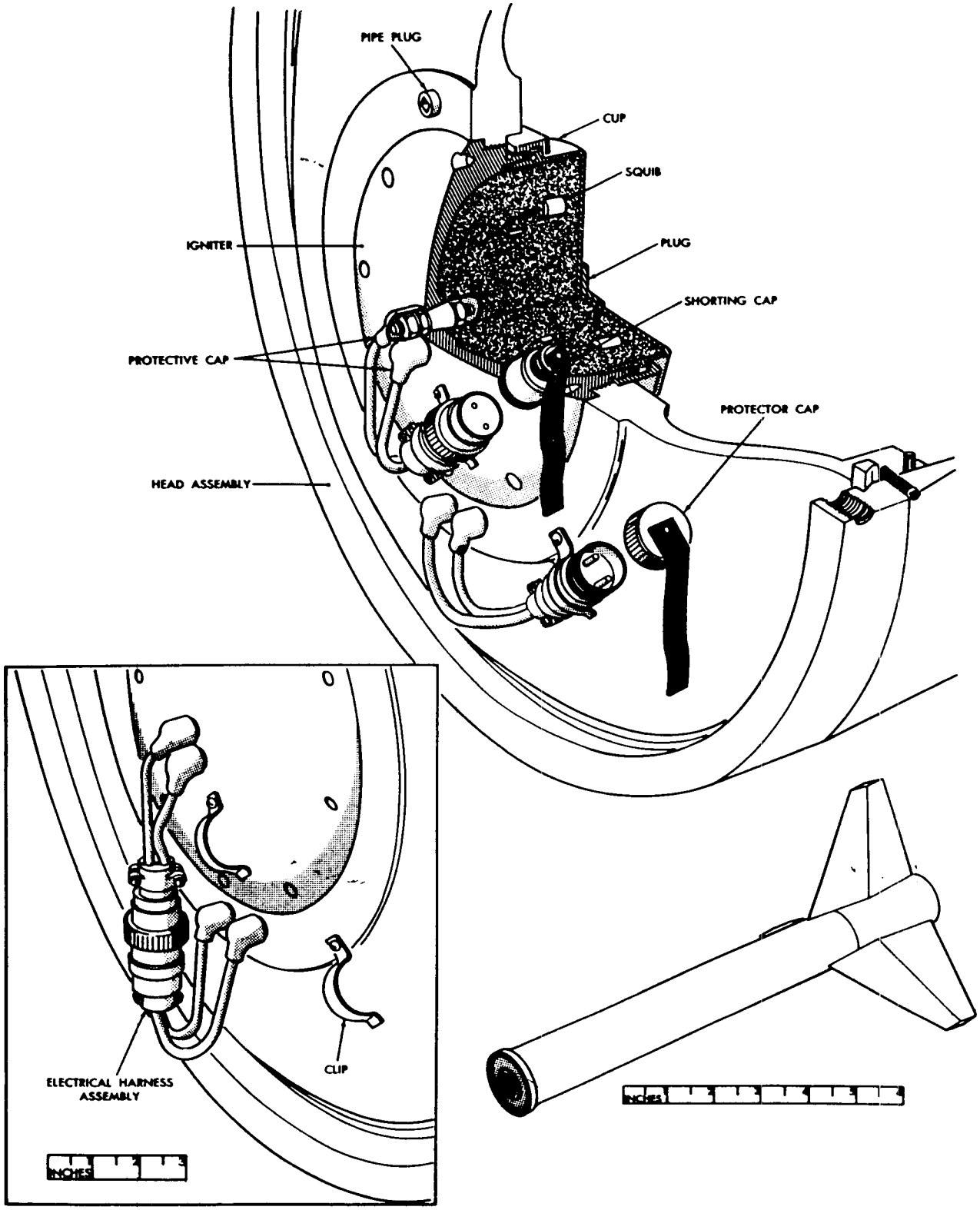


*Figure 182. Installing booster igniter.*

## Section VI. LOADING AND UNLOADING TRANSPORTER-TRAILER

### 293. Loading Round on Trailer

*a.* This procedure for loading the round on the transporter-trailer is based upon the use of 1 NCO in charge, 1 driver, and 3 men. Personnel in the assembly and service section as well as in the launching section will have to load and unload rounds. Therefore, each section should designate its own crew.

*b.* Under the direction of the NCO in charge, the **driver** positions the trailer so that it is at right angles to, and approximately the length of, the extension ramps from the storage racks on which the rounds are stored.

*c.* **1** operates the parking brake on the trailer to the ON (forward) position.

*d.* The **driver,** and **1, 2,** and **3,** remove the wheel chocks from the underside of the trailer and place 1 chock behind each of the 4 dual wheels.

*e.* Under the direction of the NCO in charge, **2** and **3** operate the bed-leveling system controls until the trailer bed is level and at the same height as the loading racks. To do this, proceed as follows (fig. 76):

(1) Check the metering valve located in the center of each of the selector-valve handles for thumb tightness. The metering-valve handle should be in the UP position when it is tight. Do not use a wrench or pliers to tighten the metering valves. To do so will damage the needle and valve seat.

(2) To lower the left corner of the trailer (front or rear), turn the left selector-valve handle (front or rear) to the PUMP (up) position and the right selector-valve handle to LOCK (center) position. To lower the right corner, front or rear, reverse the position of the selector-valve handles.

(3) Remove the pump handle from the trailer beam. Insert one end of the handle over the pump lever. Operate the pump handle up and down until the corner has been lowered to the desired height.

(4) After the corner is at the desired height, operate the selector-valve handle to the LOCK (center) position. The lowered corner will remain in this position until the metering-valve handle is turned counterclockwise.

(5) To lower both the left and right corners, front or rear, at the same time, operate both selector-valve handles (front or rear) to the PUMP (up) position, tighten both metering-valve handles, and operate the pump (front or rear). When both corners are at the desired height, operate both selector-valve handles to the LOCK (center) position. Do not move the metering-valve handles.

(6) To raise the corners of the trailer, operate the selector-valve handles to the PUMP (upper) position and turn the metering-valve handles one-half turn counterclockwise. This will release the pressure in the tiedown cylinders and allow the trailer bed to raise to its normal position.

*f.* The **driver** and **1** remove the missile noseguard from the rear of the trailer by pulling the two securing pins out of the sockets and pulling the guard out of the sockets. They then store the guard on the underside of the trailer (fig. 183).

*g.* The **driver** and **1** remove the stop from each track on the trailer bed on the side next to the storage racks and store the stops on the T-support welded on the underside of the trailer and to the left of each track.

*h.* The **driver** and **1** remove the extension ramps from the storage compartment on the underside of the trailer. Both ramps may be removed at the same time and from either side of the trailer (fig. 184).

*i.* The **driver, 1, 2,** and **3,** working as two teams, install the extension ramps between the trailer and the storage racks by:

(1) Inserting the hook end of each ramp into the slotted holes at the end of each track on the trailer.

(2) Extending the ramps to the storage racks.

(3) Securing the ramps to the storage racks with the securing pins provided.

(4) Inserting the safety pins through the shank of the securing pins.

*j.* **2** and **3** crank the transporting rail followers up and out of the holes in the storage rack tracks, raise the flag stops and push the round onto the trailer.

*k.* **2** and **3** crank the followers down into the holes on the trailer bed tracks to secure the round in position on the trailer.

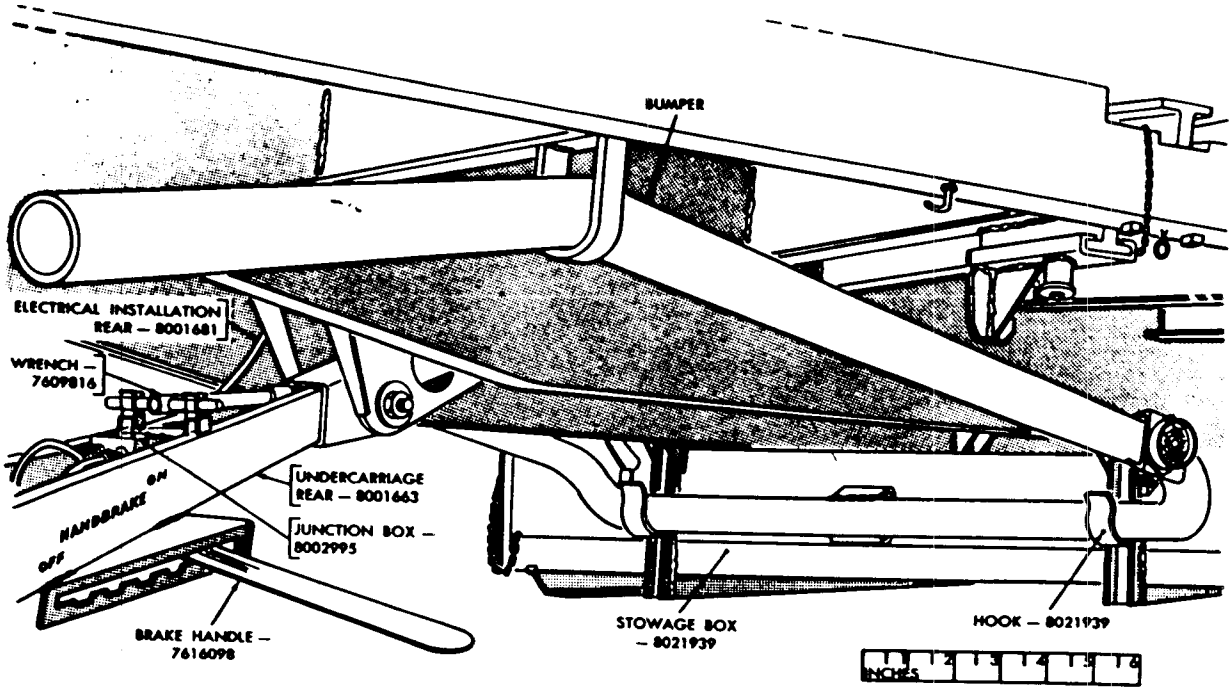


STORED

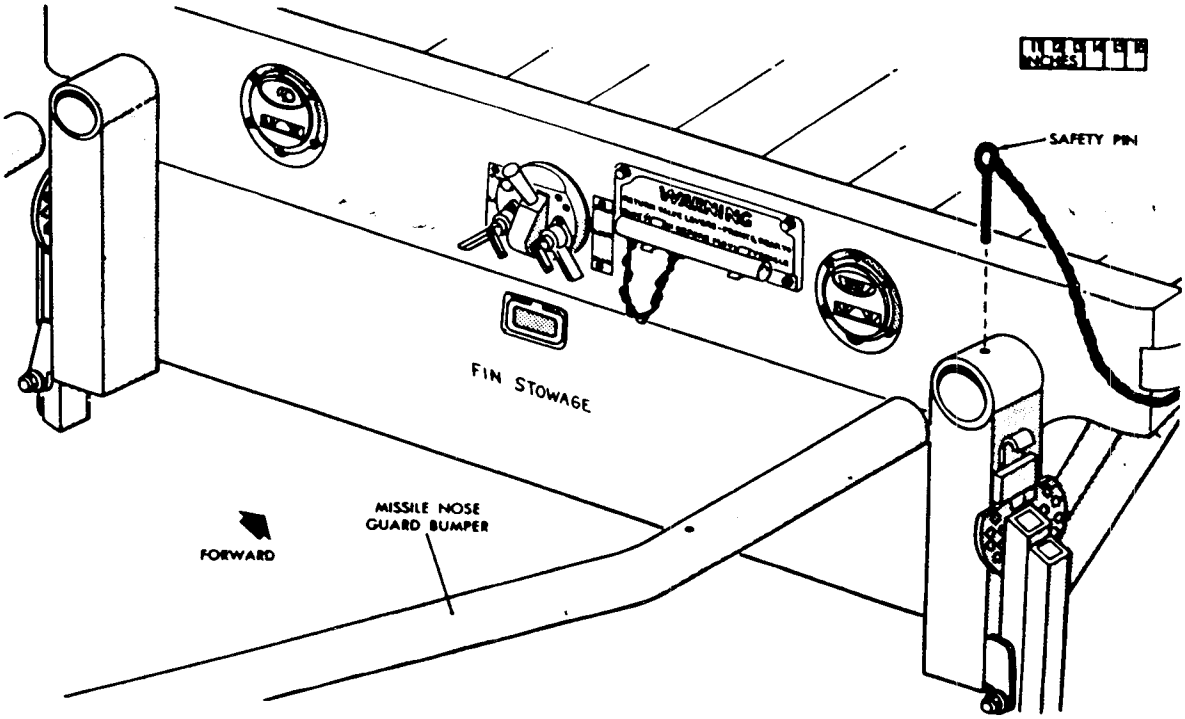


INSTALLED

*Figure 183. Missile noseguard bumper.*

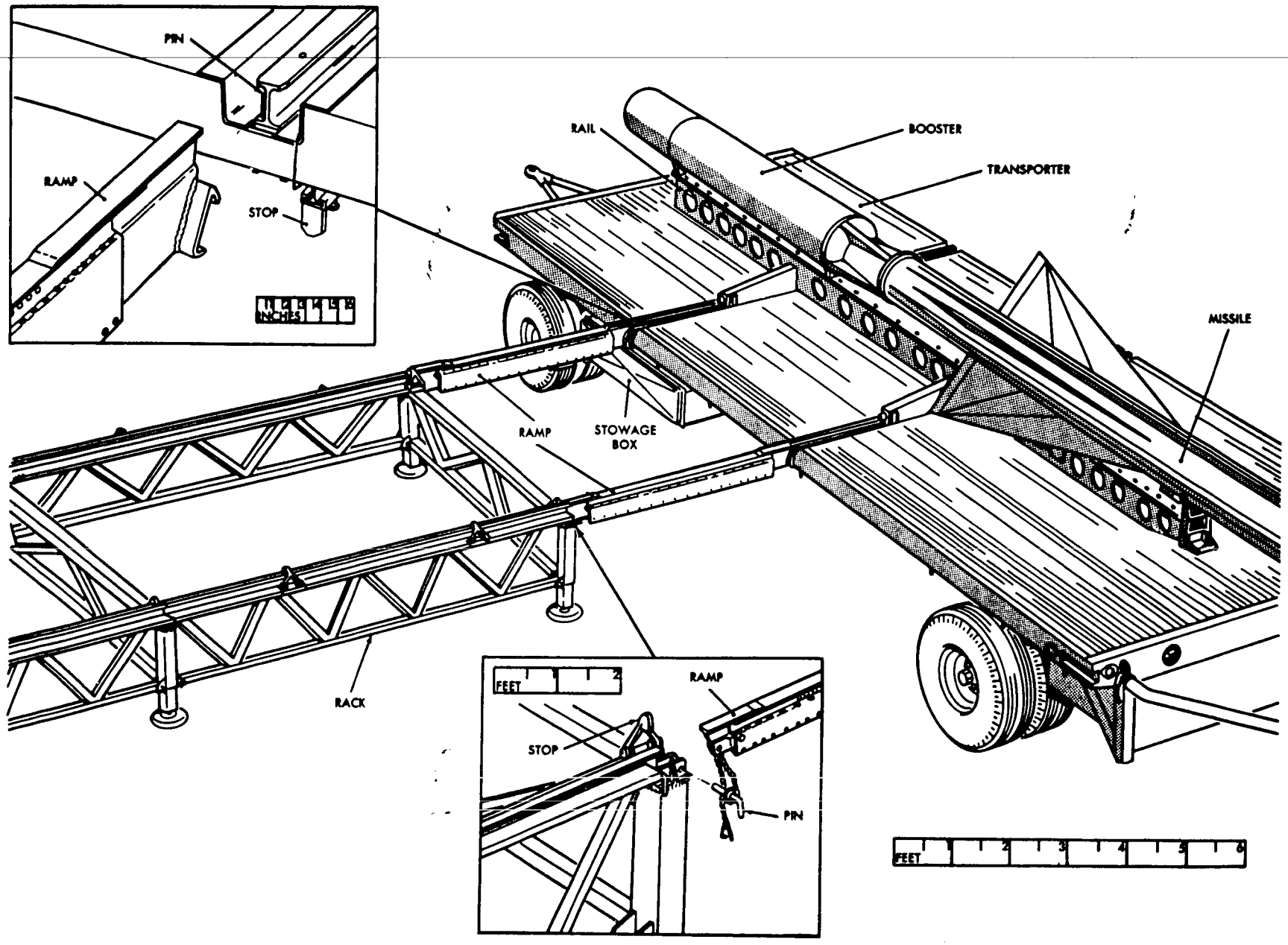


*Figure 184. Installation of extension ramps.*

*l.* Repeat steps ***j*** and ***k*** to load the second round on the trailer.

*m.* **2** and **3** store the booster fins in the rear storage compartment if not already done.

*n.* **Driver, 1, 2,** and **3,** working as two teams, remove the extension ramps and store them in the storage compartment on the underside of the trailer.

*o.* **2** and **3** remove the track stops from the underside of the trailer and fasten them in position on the trailer tracks.

*p.* **Driver** and **1** remove the missile noseguard from the underside of the trailer and fasten it in place on the rear of the trailer.

*q.* **2** and **3** raise the trailer bed by operating the selector-valve handles to the PUMP (up) position and turning the metering-valve handles a half-turn counterclockwise. After the trailer has completely raised, they operate the selector-valve handles to the RIDE (down) position and the metering-valve handles to the DOWN position.

*r.* NCO insures the selector-valve handles are in the RIDE (down) position and the metering-valve handles are in the DOWN position.

*s.* **Driver, 1, 2,** and **3** remove and store the wheel chocks.

*t.* **3** releases the trailer parking brake.

*u.* Under the direction of the NCO, the trailer is towed away.

## 294. Unloading Round From Trailer

*a.* Repeat steps ***b*** through ***i*** in paragraph 293.

*b.* **2** and **3** crank the transporter rail followers up and out of the trailer bed tracks.

*c.* **1** lowers the flag stops on the storage racks and insures the racks are ready to receive the round.

*d.* Under the direction of the NCO, **2** and **3** roll the round from the trailer to the designated position on the launcher-loader assembly.

*e.* **2** and **3** crank the followers down until the round is secured to the racks and raise the flag stops on the storage racks.

*f.* **Driver, 1, 2,** and **3,** working as two teams, remove the extension ramps and store them in their proper place in the storage compartment of the trailer.

*g.* **Driver** and **1** remove the missile noseguard and fasten it in its place on the underside of the trailer.

*h.* **2** and **3** replace the stops on the trailer tracks.

*i.* **2** and **3** raise the trailer bed by operating the selector-valve handles to the PUMP (up) position and turning the metering-valve handles a half-turn counterclockwise. After the trailer is raised to its normal height, they operate the selector-valve handles to the RIDE (down) position and the metering-valve handles to the DOWN position.

*j.* **Driver, 1, 2,** and **3** remove the chocks from behind the wheels and store them in their proper places under the trailer.

*k.* NCO checks to insure the selector-valve handles are in the RIDE (down) position and the metering-valve handles are in the DOWN position.

*l.* **1** releases the parking brake on the trailer.

*m.* Under the direction of the NCO, the trailer is towed to the designated area. The booster fins must be removed from the rear storage compartment before the trailer is towed away.

## 295. Installing Booster Fins

After the round has been delivered to the launching section, the booster fins must be installed by personnel in the launching section. The crew will be made up of a chief of section and two crewmen. **CS** assembles his crew by commanding BOOSTER CREW, FALL IN. **CS** then commands COUNT OFF and CALL OFF. The crew members report **1** and **2,** and crewman **1** and crewman **2,** respectively. **CS** then commands INSTALL BOOSTER FINS.

**1** and **2** remove the booster fins from the rear storage compartment in the transporter-trailer (if not previously removed).

**1** and **2** position one fin over the hole in the booster shroud.

**1** seats the fin in the hole so that the fin stud on the booster fits in the fin stud hole.

**2** tightens the setscrew holding the fin in the hole.

15 Nov 56

## 296. Assembly Area Checklist

Complete this checklist for each missile as each step is performed. File this checklist with the missile log book. Do not complete the initial column until check is satisfactory.

DATE _____ INSPECTOR _____ Name _____ Rank _____ SN

### Part A. INITIAL CONTAINER AND MISSILE INSPECTION

| | | *Readings where possible* | *Initials* |
|---|---|---|---|
| 1. Container number | | | |
| 2. Date received | | | |
| 3. Inspect container for dents | | | |
| 4. Humidity indication (color) | | | |
| 5. Remove missile from container | | | |
| 6. Missile serial number | | | |
| 7. Secureness of missile mountings in container | | | |
| 8. Check container interior for foreign matter, paint, and hydraulic oil | | | |
| 9. Check cradle support assembly for loose, damaged, or missing parts | | | |
| 10. Paint on missile satisfactory | | | |
| 11. Inspect missile for damaged, loose, or broken parts: | | | |
| *a.* Missile exterior | | | |
| *b.* Forward tunnels | | | |
| *c.* Aft tunnels | | | |
| *d.* Propellent air release mechanism, plastic cap, and safety wire | | | |
| *e.* Propellent air regulator safety pin and flag | | | |
| *f.* Air stagnation pressure plug | | | |
| *g.* Air stagnation pressure line protector (taped to missile or in bag) | | | |
| *h.* Propellent tank schrader valve fittings | | | |
| *i.* Propulsion arming lanyard | | | |
| 12. Inspect accessory bags for the following and record the quantities present: | | | |
| *a.* Teflon stopper propellent fittings | 2 | | |
| *b.* Teflon washers propellent fittings | 2 | | |
| *c.* Hydraulic arming lanyard | 1 | | |
| *d.* Air stagnation pressure line protector | 1 | | |
| *e.* Fairing strips for main fins: | | | |
| (1) Aft (each approx 4¾ x 2⅜ w/screws, and washers) | 8 | | |
| (2) Center (each approx 5½ x 2¼ w/screws and washers) | 8 | | |
| (3) Forward (each approx 2⅜ x 2½ w/screws and washers) | 8 | | |
| *f.* Fuel fill plug | 1 | | |
| *g.* Oxidizer fill plug | 1 | | |
| *h.* Starting fluid fill plug | 1 | | |
| 13. Inspect the fin boxes for the following: | | | |
| *a.* Control fins and bolts | | | |
| *b.* Main fins and bolts | | | |
| *c.* Ailerons | | | |
| *d.* Booster fins | | | |
| 14. Proper entries correctly made in logbook | | | |
| 15. Proper transportation entries in logbook | | | |
| 16. Inspection window removed from the container end and placed inside | | | |

_____
Supervisor's signature

## Part B. BOOSTER UNCRATING, ASSEMBLY, AND INSPECTION

| | *Readings where possible* | *Initials* |
|---|---|---|
| 1. Booster wiring test | | |
| 2. Check fin mounting assembly | | |
| 3. Check fin fairing | | |
| 4. Check rail for serviceability | | |
| 5. Check resonance rods for looseness (longitudinal motion only) | | |
| 6. Propellant grain free of cracks | | |
| 7. Remove inspection windows from container ends and place inside | | |
| 8. Check the missile-away switch for proper position | | |
| 9. Booster serial number | | |
| 10. Booster lot number | | |
| 11. Date loaded | | |

Supervisor's signature

## Part C. PROPULSION LOW PRESSURE CHECK

| | *Readings where possible* | *Initials* |
|---|---|---|
| *1. Record missile pressure for | | |
| *a.* Oxidizer tank | psi | |
| *b.* Fuel tank | psi | |
| *c.* Fuel line | psi | |
| 2. Air regulator locked and safety wired | | |
| 3. Safety wire in the pressure release cap | | |
| *4. Oxidizer tank pressure (40 to 50 psi) | psi | |
| *5. Fuel tank pressure (40 to 50 psi) | psi | |
| *6. Fuel line pressure (40 to 50 psi) | psi | |
| *7. Old washers replaced. Proper fit of teflon stopper in the oxidizer fill fitting. Stopper in place (loosely) | | |
| *8. Fill plugs fingertight only | | |

Supervisor's signature

## Part D. MAIN FIN AND CONTROL FIN INSTALLATION

| | *Readings where possible* | *Initials* |
|---|---|---|
| 1. Main fins: | | |
| *a.* Aft and center lugs torqued to 230 to 280 in.-lbs | | |
| *b.* Forward lug torqued to 73 to 100 in.-lbs | | |
| 2. Alinement of ailerons | | |
| 3. Alinement of control fins | | |
| 4. Control fins torqued to 73 to 100 in.-lbs | | |

Supervisor's signature

*Omit for contaminated missle.

## Part E. HYDRAULIC AND HIGH-PRESSURE AIR CHECKS

| | Readings where possible | Initials |
|---|---|---|
| 1. Overboard dump valve checked | | |
| 2. Safety pin installed | | |
| 3. Check for security: | | |
| *a.* High-pressure air lines | | |
| *b.* High-pressure hydraulic lines | | |
| *c.* Hydraulic return lines | | |
| 4. Hydraulic arming lanyard installation | | |
| 5. High-pressure leak check | | |
| 6. Hydraulic leak check | | |
| 7. Hydraulic ground power plug safety wire installation | | |

Supervisor's signature

## Part F. COMPLETED MISSILE CHECK

| | Item | Standard | Readings where possible | Initials |
|---|---|---|---|---|
| 1. | Proper connections made | | | |
| | Missile power supply check: | | | |
| | *a.* Missile current | 100% ± 10% | % | |
| | *b.* Missile voltage | 100% ± 10% | % | |
| | *c.* 230V | 100% ± 10% | % | |
| | *d.* 300V | 100% ± 10% | % | |
| | *e.* STRG PLATE: | | | |
| | (Msl with guidance unit model No. GS-15660). | 100% ± 10% | % | |
| | (Msl with guidance unit model No. GS-17120 and GS-16725). | 96% ± 10% | % | |
| | *f.* 150V | 100% ± 10% | % | |
| | *g.* Cont Sig | Guidance units model GS-15660 and GS-17120 100% ± 10%; GS-16725, adjust to 100%. | % | |
| | *h.* FIN VOLT | 25% to 50% | % | |
| | *i.* STRG PIATE BAL | 0% ± 10% | % | |
| | *j.* CONT SIG BAL | GU Model number GS-17120 and GS-16725, 0 ± 10%; GS-15660, adjust to 0. | % | |
| 2. | REC SENS (difference not greater than 5 db) | | | |
| | (ANT No. 2) | 5 db or higher | db | |
| | (ANT No. 4) | 5 db or higher | db | |
| 3. | TRANS POWER | 0 to 15 db | db | |
| 4. | TRANS FREQ (record deviation only) | ± 1 mc | mc | |
| 5. | NONRESPONSE (0.75 usec steps from 1.00 to 10.75). | | | |
| 6. | PATTERN MODULATOR | | | |
| 7. | MEASURED RESPONSE TIME | 0.61 ± 0.07 or from log book | usec | |

| Item | Standard | Readings where possible | Initials |
|---|---|---|---|
| 8. BURST TIME | GS-15722-64 ± 5 msec; GS-15636 63 ± 4 msec. | _____ msec | _____ |
| 9. FAIL-SAFE TIME | 3 to 7 sec | _____ sec | _____ |
| 10. BUZZ VOLTAGE: | TYPE OF OIL | | |
| Roll buzz | _____ | _____ % | _____ |
| Pitch buzz | _____ | _____ % | _____ |
| Yaw buzz | _____ | _____ % | _____ |
| 11. YAW SERVO OPERATION (normal test position): | | | |
| Y Accel (dynamic) right | Negative | _____ | _____ |
| Y Accel (dynamic) left | Positive | _____ | _____ |
| Y Accel (static) | 0% ± 10% | _____ % | _____ |
| Y rate (dynamic) right | Negative | _____ | _____ |
| Y rate (dynamic) left | Positive | _____ | _____ |
| Y rate (static) | 0% ± 10% | _____ % | _____ |
| Y buzz voltage (check and readjust if necessary). | | _____ % | _____ |
| Y amp balance | 0% ± 10% and fins on center scribe line. | _____ % | _____ |
| Y fin | 0% ± 100% (valve meter) | _____ % | _____ |
| Y Amp Bal check +5g to 0g | Fins return to center scribe lines. | _____ % | _____ |
| Y Amp Bal check −5g to 0g | Fins return to center scribe lines. | _____ % | _____ |
| YAW STATIC CHECKS (90° clockwise position): | | | |
| Y Accel | Positive | _____ | _____ |
| Y rate | 0% ± 10% | _____ % | _____ |
| Y fin | Positive | _____ | _____ |
| 12. PITCH SERVO OPERATION (90° clockwise position): | | | |
| P Accel (dynamic) right | Negative | _____ | _____ |
| P Accel (dynamic) left | Positive | _____ | _____ |
| P Accel (static) | 0% ± 10% | _____ % | _____ |
| P rate (dynamic) right | Negative | _____ | _____ |
| P rate (dynamic) left | Positive | _____ | _____ |
| P rate (static) | 0% ± 10% | _____ % | _____ |
| P buzz voltage (check and readjust if necessary). | | _____ % | _____ |
| P Amp balance | 0% ± 10% and fins on center scribe lines. | _____ % | _____ |
| P fin | 0% ± 100% (valve meter) | _____ % | _____ |
| P Amp Bal check 5g to 0g | Fins return to center scribe lines. | _____ % | _____ |
| P Amp Bal check −5g to 0g | Fins return to center scribe lines. | _____ % | _____ |
| PITCH STATIC CHECKS (normal test position): | | | |
| P Accel | Negative | _____ | _____ |
| P rate | 0% ± 10% | _____ % | _____ |
| P Fin | Negative | _____ | _____ |

| Item | Standard | Readings where possible | Initials |
|---|---|---|---|
| 13. ROLL SERVO OPERATION (normal test position): | | | |
| Check gyro preset operation | Preset | | |
| | Flight | | |
| | Gyro to Control Point | | |
| Roll rate (static) | 0% ±10% | % | |
| Roll buzz voltage (check and readjust if necessary). | | % | |
| Roll amp balance | 0% ±10% ailerons on center scribe lines. | % | |
| Roll fin | 0% ±100% (valve meter) | % | |
| Roll rate (dynamic) CCW | Positive | | |
| Roll rate (dynamic) CW | Negative | | |
| ROLL STATIC CHECK (90° clockwise position): | | | |
| Roll pos | −100% ±20% | % | |
| Roll rate | 0% ±10% | % | |
| Roll fin | Negative | | |
| 14. PRESSURE PICKUP (normal flight position): | | | |
| Pressure check (55 psi ram pres) | Fins and ailerons streamline | | |
| Fin volt | Increase (voltage meter) | | |
| Vacuum check | Fins and ailerons hardover | | |
| Fin volt | Decrease (voltage meter) | | |
| 15. PRECISE COMMAND CHECK (normal flight position): | | | |
| Y+5g Comd | 0%±10% | % | |
| Y−5g Comd | 0%±10% | % | |
| Y 0g Comd | −19%±10% | % | |
| P+5g Comd | 0%±10% | % | |
| P−5g Comd | 0%±10% | % | |
| P 0g Comd | −19%±10% | % | |
| 16. INTERNAL OPERATION: | | | |
| Missile current | 100%±10% | % | |
| Missile voltage | 100%±10% | % | |
| Y+2g Comd (entire range) | Smooth fin response | | |
| Y−2g Comd (entire range) | Smooth fin response | | |
| P+2g Comd (entire range) | Smooth fin response | | |
| P−2g Comd (entire range) | Smooth fin response | | |
| (*Note.* ROLL POSITION switch to PRESET) | | | |
| Roll CW | (Fins deflect in direction of roll). | | |
| Roll CCW | (Fins deflect in direction of roll). | | |
| 17. Recheck transmitter frequency. (record deviation only) | ±1 mc | | |
| 18. VIBRATOR RUNNING TIME | | | |
| 19. Code (L) number of delay line | | | |

Supervisor's signature

## Part G. BATTERY INSTALLATION

| | *Readings where possible* | *Initials* |
|---|---|---|
| 1. Battery test satisfactory | | |
| 2. Thermostatic control unit properly installed | | |
| 3. Battery box: | | |
| *a.* Rubber pads at each end | | |
| *b.* Flat gasket on top | | |
| *c.* Battery and heater leads | | |
| 4. Battery box well clean | | |
| 5. O-ring under battery box and gusset | | |
| 6. Connections to missile | | |

Supervisor's signature

## Part H. MISSILE-BOOSTER JOINING

| | *Readings where possible* | *Initials* |
|---|---|---|
| 1. Missile in thrust structure against shock ring; index pin properly alined | | |
| 2. Bolts on rear of rail properly positioned | | |
| 3. Ground power plugs fit properly | | |
| 4. Forward missile support yoke positioned and locked | | |
| 5. Squib igniter wiring taped to aft end of booster | | |
| 6. Proper entries made in logbook | | |

Supervisor's signature

## Part I. PROPELLANTS

| | *Readings where possible* | *Initials* |
|---|---|---|
| 1. Missile fueled | °F | |
| 2. Lot number of oxidizer | | |
| 3. Missile filled with oxidizer | date<br>lbs. | |
| 4. Equipment cleaned and decontaminated | | |
| 5. Proper entries made in logbook | | |

Supervisor's signature

## Part J. SAFETY FLAGS

| | *Readings where possible* | *Initials* |
|---|---|---|
| 1. Propulsion air regulator | | |
| 2. Booster shorting plug | | |

Supervisor's signature

## Part K. EXPLOSIVE COMPONENTS

| | *Readings where possible* | *Initials* |
|---|---|---|
| 1. DETONATING CORDS INSTALLED | | |
| 2. ARMING MECHANISMS INSTALLED | | |
| 3. WARHEAD INSTALLATION: | | |
| *a.* Nose | | |
| *b.* Center | | |
| *c.* Aft | | |

Supervisor's signature

## Part L. BOOSTER IGNITOR INSTALLATION

| | *Readings where possible* | *Initials* |
|---|---|---|
| 1. Ignitor inserted and tightened | | |
| 2. Shorting plug installed on wiring at nozzle end of booster | | |

Supervisor's signature

## Part M. LAUNCHING AREA

| | *Readings where possible* | *Initials* |
|---|---|---|
| 1. Rail satisfactory | | |
| 2. Explosive components connected | | |
| 3. Ground power plugs properly seated in missile | | |
| 4. Starting fluid inserted | | |

Supervisor's signature

# CHAPTER 11

# EMERGENCY PROCEDURES (MISSILE AND BOOSTER)

## Section I. PERSONNEL

### 297. Crews

To handle any emergency that might arise with a ready round, or in missile assembly and service, all personnel must be familiar with the procedures for disarming the booster, depressurizing the missile, removing the warheads, removing the propellents, and removing the batteries from the missile. Table XLVIII shows the procedures and the personnel required for each procedure, assuming the round is on the launcher-loader assembly ready to fire when it becomes necessary to remove the round. The portions of columns 1 and 2 used will be determined when the emergency procedures are required. For example, 1 will not be required unless the round is a misfire. Teams will be organized in both the assembly and service section and in each launching section. Drills will be repeated until all members are thoroughly familiar therewith. Personnel not required in any particular procedure or drill will remain a safe distance from the work area. If the defective missile is in storage in an undeground-aboveground type site (ConUS), the defective missile should be secured to the elevator and raised aboveground.

*Table XLVIII. Emergency Procedures Personnel*

| Procedure | Personnel required |
|---|---|
| 1. Disarming booster | 1. NCO. |
| 2. Disarm arming mechanism | 2. NCO and 1. |
| 3. Remove two bottom booster fins and battery box | 3. NCO, 1 and 2. |
| 4. Position transporter-trailer | 4. NCO, driver, air compressor operator, 3 and 4. |
| 5. Bring up mobile crane | 5. Crane operator. |
| 6. Transfer round to trailer | 6. NCO, driver, 1 and 2. |
| 7. Depressurize missile | 7. NCO, air compressor operator, materiel specialist. |
| 8. Remove warhead system | 8. NCO, 1, 2, and 3. |
| 9. Transfer round back to storage racks | 9. NCO, 1, 2, and 3. |
| 10. Remove starting fluid | 10. NCO, 1 and 2. Requires protective clothing. |
| 11. Put universal handling dolly on trailer | 11. NCO, crane operator, driver, 3 and 4. |
| 12. Separate missile from booster | 12. NCO, crane operator, 1 and 2. |
| 13. Put missile on dolly | 13. NCO, crane operator, 1 and 2. |
| 14. Remove oxidizer | 14. NCO, 3 and 4. 1 and 2 standby crew. Requires protective clothing. |
| 15. Remove fuel | 15. NCO, 1 and 2. 3 and 4 standby crew. Does not require protective clothing. |
| 16. Tow trailer away | 16. Driver. |
| 17. Remove mobile crane | 17. Crane operator. |

### 298 Handling the Round

The round should be transferred to the transporter-trailer from the storage racks or the launcher-loader assembly to remove the warheads and depressurize the missile. The two lower booster fins must be removed before the round can be rolled on to the transporter-trailer. Before the propellents can be removed, the missile and booster must be separated and the missile then placed on the universal handling dolly located on the transporter-trailer. At all times personnel working on the missile and booster will be held to the absolute minimum. Personnel not required in any step will remain a safe distance from the working area. Firefighting equipment and medical personnel will be available at all times.

## 299. Safety Precautions

All applicable safety precautions will be strictly adhered to at all times. Protective clothing will be worn when required. A standby crew will be available for immediate relief during propellen removal. Absolutely no smoking will be per mitted in the working area. Containers of sodiun bicarbonate, acetic acid, and fresh water will b readily available in the immediate working area

# Section II. BOOSTER IGNITER, ARMING MECHANISM, AND BATTERY BOX

## 300. Booster Disarming

*a.* The **NCO** disconnects the ground power supply from the plug behind the nozzle closure and immediately installs the shorting cap.

*b.* The **NCO** disconnects the cannon plug on the igniter dome from the cannon plug at the head of the booster and installs a shorting cap on the igniter female plug. He attaches the plug on the booster head to the clip provided and installs the protective cap.

## 301. Disconnecting Arming Mechanisms

The **NCO** and **1** each remove one of the arming mechanism access covers. These covers are labeled ARMING MECHANISM INSIDE. They then remove the detonating-cord lead from each arming mechanism, fasten the cord in the clip provided, and replace the covers.

## 302. Booster Fin Removal

After the booster igniter and the arming mechanisms have been made safe, **1** and **2**, under the supervision of the **NCO**, remove the two bottom booster fins.

## 303. Battery Box

*a. Responsibility.* When a missile is deactivated, the battery box should be removed from the guidance section, the battery should be placed on the battery-charging console and placed on a trickle charge. The battery box and battery will be removed by **1** assisted by **2** as required.

*b. Procedure.*

Disconnect the black battery lead which is connected to the −28-volt post on the guidance section. Tape the end of the lead.

Disconnect the red battery lead and the ground jumper from the GND post on the guidance section. Tape the end of the lead.

Remove the two screws which attach the terminal strip to the battery box cover and remove the plastic cover from the terminal strip.

Disconnect one of the battery heater lead and the heater power wire to the cente warhead section, from one of the termina strip posts.

Disconnect the other two heater wires and a ground jumper lead from the other pos of the terminal strip.

Reinstall the terminal strip and cover.

Remove the four screws which secure the battery-box assembly in the guidance section.

Remove the battery-box assembly to a workbench.

Remove the four flathead screws which fasten the cover to the battery box, and remove the cover. In removing the cover, thread the battery leads and the heater leads, one at a time, through the grommet in the battery-box cover.

Remove the battery from the battery box and return the battery to the battery-charging console where it will be placed on trickle charge.

Replace the cover on the battery box, securing it with the four flathead screws. Make sure that the battery-box heating pads, end rubber pads, and leads are inside the box.

Reinstall the battery box in the guidance section. Secure the box with the four screws.

Tape the electrical leads from the external power supply to the top of the battery box.

Tape the jumper lead to the power supply lead.

## 304. Preparing Transporter-Trailer

*a.* While **1** and **2** are removing the booster fins and battery box, the **driver,** under the direction of the **NCO,** positions the transporter-trailer within the length of the extension ramps from the storage racks.

*b.* The **driver, air compressor operator, 3,** and **4** prepare the trailer to receive the round by

emplacing the extension ramps and leveling the trailer bed.

## 305. Mobile Crane

While the transporter-trailer is being prepared to receive the round, the mobile-crane operator drives the crane to within a short distance from the launcher-loader assembly.

## 306. Missile Depressurization

*a. Procedure.* The 2 air storage tanks of the missile, 1 for the hydraulic system and 1 for the propellent system, are designed so that they may be pressurized at the same time. When they are depressurized, however, a one-way check valve prevents airflow from the hydraulic tank to the propellent tank. Therefore, the propellent air tank can be depressurized without affecting the hydraulic air tank. However, if the hydraulic air tank is depressurized first, while the propellent air tank is still under pressure, the tanks will depressurize simultaneously. This is an extremely slow process and therefore is not recommended as an emergency procedure. Unless otherwise indicated, all steps in depressurization are performed by the air compressor operator.

*b. Depressurizing the Propellent System Air Storage Tank.*

Remove the air-filler fitting plug from the air-filler valve.

Detach the guard from the air-system filler plunger and insert the plunger in the air filler fitting. Secure the plunger in place with the safety nut. The safety nut should be installed by hand. Do not use a wrench.

Depress the air-system filler plunger, open the hose air valve, and allow the air to bleed out into the atmosphere. The plunger will remain depressed until the air pressure in the tank drops to approximately 1,000 psi. It must then be depressed manually until the remaining pressure is bled off.

After the air has all escaped, allow the plunger to remain in the filler fitting until both return to ambient temperature, remove the airfiller fitting slowly, and replace the filler fitting plug.

*c. Depressurizing Hydraulic System Air Storage Tank.*

Disconnect the high-pressure air line in tunnel 2 at the input to the air pressure regulator valve (port C, station 37.250).

Displace the line up or down so that it clears the fitting.

Tie the loose end of the line to the tunnel brackets.

Warn all personnel to stand clear of the missile and behind the open end of the line.

The **NCO** insures the opened line is securely fastened and all personnel are away from the front of the open line.

The **NCO** pulls the hydraulic arming lanyard. The air in the hydraulic-system air tank will escape through the open line.

***Caution:*** UNDER NO CONDITIONS WILL ANYONE BE IN FRONT OF THE OPEN END OF THE LINE.

After the air has escaped, the **NCO** reconnects the line at port C and resets the hydraulic arming lanyard.

*d. Depressurization (Hydraulic System Air Storage Tank) on Launcher.*

Insure that the hydraulic quick-disconnect plug is firmly and securely seated in the missile.

Using the arming lanyard impact puller, pull the hydraulic arming lanyard to the out position. This will activate the hydraulic system.

Insure that the by-pass valve on the missile hydraulic test power pack is in the open position.

Turn the LAUNCHER DC power ON at the LOP.

Position the TEST-FIRE switch to TEST.

Position the three-way selector valve to LAUNCHER.

Turn the MISSILE HYDRAULIC power on at the LOP.

Slowly close the by-pass valve on the missile hydraulic test power unit until pressure builds to 1,900 psi. This will allow the hydraulic air storage tank to blow down.

Open the by-pass valve on the missile hydraulic testing power unit, turn off the MISSILE HYDRAULICS and POWER at LOP, disconnect all lines and prepare to move the round to the transporter trailer.

*Note.* This method may be used only on missiles above serial number 2,000 unless appropriate field changes have been made. If this method is used, reverse steps 6 and 7 in table XLVIII.

## 307. Transferring Round to Trailer

As soon as the missile has been depressurized, the **driver, 1,** and **2,** under the direction of the **NCO**, push the round from the storage racks on to the transporter-trailer. The driver locks the round in position on the trailer.

## 308. Explosive Components

Always remove the entire warhead system (3 warheads, associated detonating cord assemblies, and 2 arming mechanisms) from the missile before attempting any repair or rebuild, and before transporting the missile to an ordnance depot. During removal of the explosive components, the number of personnel must be kept to a minimum consistent with efficient performance. After the warheads are removed from the missile, the initiators are removed (unless factory installed) and the warheads placed in their original containers to prevent damage or inadvertent detonation. If the explosive components are not to be reinstalled within a short time, they must be stored under conditions which conform with their respective explosive classification as set forth in TM 9-1900.

## 309. Explosive Components Removal

*a. Removing the Center and Aft Warhead Section Covers.*

**2** places and adjust the nose support under the missile just forward of the waveguides.

**2** removes the center warhead section cover by removing the screws which hold the cover to the structural ring and the screws which holds the cover to the missile along tunnels 2 and 4.

**3** removes the propulsion arming lanyard and and the aft warhead section cover by removing the screws which hold the cover to the structural ring and the screws which hold the cover to the missile along tunnels 2 and 4.

*b. Removing Tunnels.* **1, 2,** and **3** remove the forward section of tunnels 1, 2, 3, and 4 by removing the screws which secure each of the forward tunnel assemblies to the missile.

*c. Removing Nose Section.*

**1** checks to make sure the nosetip plug is installed. If it is not and cannot be found, cover the hole with masking tape.

**2** disconnects the line leading from the stagnation pressure tube trap at the fitting in tunnel 3 and installs the dust covers.

**3** disconnects the nose warhead detonati cord lead from the five-way connector the center warhead section of the missi

While the **NCO** and **1** hold the nose warhe section of the missile, **2** and **3** remove t nose section.

**2** and **3** carry the nose section to the ar designated by the **NCO** for warhe removal.

***Caution:*** Do not drag the detonati cord and the PETN relay cap on t ground. The relay cap is sensitive shock and may be detonated if it is ha dled roughly. Tape the PETN relay ca

*d. Removing Nose Warhead and Detonating Co Assembly.*

**1** completes the nose warhead removal (whi **2** and **3** remove the center and aft wa heads) as follows:

Pull out the split grommet from the gromm hole in the nose section, withdraw t detonating cord and PETN relay ca through the opening, and replace t grommet.

Remove the three screws which secure t ballast plate assembly and the retainin ring to the nose section and remove t retaining ring and ballast assembly.

Loosen the coupling nut which secures t detonating cord to the nose warhead an remove the detonating cord.

Store the detonating cord in the designate place.

While **1** is storing the nose warhead detonat ing cord, the **NCO** removes the nos warhead from the nose section and store the warhead in an original shipping con tainer. When the warhead is removed install the shipping plug in the warhea to keep out foreign materials.

**1** replaces the ballast plate assembly and th retaining ring in the nose warhead.

*e. Removing Center and Aft Warhead Detonatin Cord Assemblies.*

**2** removes the aft warhead detonating cor lead from the five-way connector.

**3** removes the detonating cord from the aft warhead, then removes the cord from the 14 clips along tunnel 4, and coils and stores the aft warhead detonating cord in the prescribed place, and replaces the shipping plug in the aft warhead initiator.

2 removes the center warhead detonating cord from the five-way connector and from the center warhead and inserts the shipping plug in the warhead initiator.

2 coils, tags, and stores the center warhead detonating cord.

*f. Removing Center and Aft Warheads.*

2 and 3 loosen the center and aft warhead anchor lugs.

2 removes the four anchor lugs holding the center warhead to the mounting brackets.

While 2 is removing the anchor lugs, 3 gets the warhead handling yoke.

2 and 3 attach the warhead handling yoke to the center warhead, remove the warhead from the missile, remove the initiator (unless factory installed), and place the warhead in an original shipping container. To remove the initiator, remove the retaining plate, pull the initiator out, insert a shipping plug, and replace the retaining plate.

While 2 is removing the initiator from the center warhead, 3 removes the anchor lugs holding the aft warhead into position. 3 then assists 2 in placing the warhead in an original shipping container.

2 and 3 attach the warhead handling yoke to the aft warhead handling rings, remove the warhead from the missile, remove the initiator, and store the warhead in an original shipping container.

*g. Removing Arming Mechanisms.*

While 2 and 3 are removing the center and aft warheads, 1, upon completion of removal of the nose warhead, will remove the two arming mechanisms as follows:

Remove detonating cord leads 1 and 5 from the clip inside each arming mechanism access cover, remove the leads from the five-way connector, and store them in the designated place.

Remove the screws which secure each arming mechanism support bracket to the missile, pull the brackets out far enough to detach the cables from each arming mechanism, and tape the ends of the cables to the inside of the missile.

Remove the arming mechanisms from the support brackets by removing the holding screws.

Install the wing nut, which prevents downward movement of the inertia weight, and the safety wire between the two terminals.

Store the arming mechanisms in an original shipping container.

Reinstall the support brackets in the missile.

*h. Replacing Nose Section.*

1, 2, 3, and 4 replace the nose section on the missile.

1 replaces the forward parts of tunnels 1, 2, 3, and 4.

2 replaces the center warhead section cover.

3 replaces the aft warhead section cover.

After the center and aft warhead section covers have been replaced, 2 removes the improvised support from under the missile.

## Section III. PROPELLENT REMOVAL

### 310. Procedure

The complete propellent removal operation will be performed with the missile mounted on the universal handling dolly located on the transporter-trailer. This dolly is stored in the storage compartment of the transporter-trailer when not in use. To use the universal handling dolly, the missile must first be separated from the booster. Therefore, to prepare for propellent removal, the round must be transferred from the transporter-trailer back to the storage racks, the missile separated from the booster, the universal handling dolly installed on the transporter-trailer, and the missile then placed on the dolly. The explosive components will normally be removed prior to the removal of the propellents.

### 311. Equipment

In addition to the transporter-trailer and the universal handling dolly, the missile hoist beam, the mobile crane, and the propellent draining kit must be used. The tools needed are stored in the fuel and oxidizer tool packs.

### 312. Preparation for Propellent Removal

*a. Transferring Round.* Under the direction of the NCO, 1 and 2 raise the locking pins from the

tracks and push the round from the transporter-trailer to the storage racks.

*b. Mobile Crane.* The **crane operator** positions the crane near the transporter-trailer. The crane will be used to separate the missile from the booster.

*c. Installing Handling Dolly on Trailer.*

**1** removes the stops from the tracks on the transporter-trailer and stores them in their proper place under the trailer.

Under the direction of the **NCO, 1, 2, 3,** and **4** lift the universal handling dolly onto the trailer bed. Guide the dolly so that the wheels on the outriggers ride on the tracks on the trailer bed.

**1** and **2** fasten a hook assembly to each end of the outriggers with the attached pins.

**1** and **2** lock the dolly in place on the trailer tracks by tightening the followers located on each axle of the dolly and installing a stop at the end of each outrigger.

*d. Separating Missile and Booster.*

**3** and **4** remove the handling ring segments from the storage box under the transporter-trailer bed.

**3** and **4** fasten the four upper ring-segments to the missile.

The **crane operator** attaches the missile hoist beam to the crane cable and then positions the crane near the missile.

***Caution:*** Attach the cable at the point marked LIFT POINT FOR COMPLETE MISSILE on the missile hoist beam.

Under the direction of the **NCO,** the **crane operator** lowers the missile hoist beam until the sling assemblies can be attached to the missile handling rings on the missile.

**3** and **4** attach the hoist beam sling assemblies to the handling ring segments on the missile, using the four safety-locking pins on the sling assemblies.

**1** insures that the hydraulic actuating lanyard is disconnected from the quick-disconnect plug. This may have been removed during depressurization of the hydraulic-system air storage tank. If it was not removed at the time, **1** removes the pin which secures it to the lug and removes the quick-disconnect plug.

**2** loosens the clamp and wing nuts which hold the electric plug in its installed position and latches the plug in the down position.

**3** removes the lock pin and loosens the clamps and wing nuts on the forward-support yoke assembly.

Under the direction of the **NCO,** the **crane operator** lifts the missile up slightly with the power crane, at the same time pulling it free from the booster thrust fitting. **1, 2, 3,** and **4** steady the missile as required.

When the missile is free of the thrust fitting, the **crane operator** lifts it clear of the launching and handling rail and then positions the missile so that **1** and **2** can work on the bottom side.

**1** and **2** attach the four lower handling ring segments to the missile.

Under the direction of the **NCO,** the **crane operator** places the missile on the universal handling dolly. The forward end of the missile (nose section) should be on the adjustable end of the dolly.

**1** and **2** detach the sling assembly from the handling rings on the missile.

The **crane operator** then raises the missile hoist beam and moves the crane, with the beam attached, away from the missile.

**1** and **2** lock the missile on the universal handling dolly with the clamp assemblies.

***Caution:*** The clamp assemblies are heavy, and severe injury may result from careless handling.

The **NCO** insures that the transporter-trailer is level.

## 313. Removal of Starting Fluid

*a. Sequence.* If the propellents are to be removed safely, the starting fluid should be removed before either the oxidizer or the fuel.

*b. Safety.* Full protective clothing must be worn.

*c. Drill.* (Aniline-alcohol only.)

**2** inserts the two speed sockets and handles into the elevating gear fitting and fully extends (raises) the universal dolly. Raise the missile slowly.

**1** removes the plug from the starting-fluid vent opening. The vent is identified by red spot 1½ inches in diameter. Access is had at a hole in tunnel 4 at station 160.05.

**2** removes the starting-fluid filler plug.

*Note.* This plug is identified by a red spot 1¾ inches in diameter at station 227.37.

1 obtains a suitable container, some commercial grade of ethyl alcohol, and the decontamination equipment.

2 obtains the starting-fluid syringe from the draining kit and inserts the syringe (with the handle pushed all the way in) into the filler fitting.

2 pulls the syringe handle all the way out and then removes the syringe from the filler fitting.

***Caution:*** Carry the filled syringe with the tip up to prevent leakage.

While 1 holds the starting fluid container, 2 empties the syringe into the container. 1 closes the container and returns it to the proper storage place.

2 then fills the syringe with a commercial grade of ethyl alcohol, reinserts the syringe into the filler fitting, and injects and withdraws the ethyl alcohol three times.

2 removes the syringe from the filler fitting and empties the alcohol into a suitable container. 1 carries the container to the designated area.

2 inserts the special adapter fitting into the filler fitting.

1 connects a source of 25 psi dry air or nitrogen to the adapter fitting.

2 lowers the missile to the horizontal and rotates the missile until the starting-fluid vent opening in tunnel 4 is pointing down.

1 turns on the gas or air supply, allows the air or gas to flow through the starting-fluid line until the exhaust through the vent fitting is completely dry, and then turns off the gas or air supply.

2 rotates the missile until tunnel 1 is up, and removes the gas or air supply line and the adapter fitting from the filler plug.

2 reinstalls the filler plug.

1 reinstalls the vent plug.

1 and 2 collect all tools and take them to the area designated for decontamination. They then thoroughly decontaminate all tools used and any contaminated area.

## 313.1. UDMH Removal Procedure

2 and 3 remove caps at fill and vent ports.

1 passes the probe of the transfer tube assembly to 2.

2 inserts the probe at the fill port.

1 holds the container level with the fill port and turns the transfer tube assembly and UDMH container to prevent the tube from twisting or buckling.

When the probe is tightly inserted, 1 hands 2 the container.

2 lowers the container and at the same time pulls the red rubber cap on the vent tube to the open position to allow the container's air to escape out the vent when the starting fluid from the missile begins to fill the container.

When the starting fluid is completely removed from the missile 2 removes the transfer tube assembly probe from the missile placing the cover over the probe and closes the red rubber cap on the vent tube assisted by 1.

*Note.* It takes about 30 seconds to completely drain the starting fluid out of a missile.

2 hands 1 the transfer tube assembly and container to be taken clear of the launcher to be disposed of.

1 drains the starting fluid into a hole previously dug and then decontaminate the transfer tube and container.

3 lowers the missile to horizontal before turning on dehydrated air from propulsion test compressor.

2 flushes the starting fluid line with dehydrated air at 25 psi.

*Note.* The above step can be performed with compressed nitrogen at 25 psi if available for issue.

3 stands clear of the vent port until the starting line has been completely dried by the dry air sent through the line.

2 removes the air line hose probe from the fill port when the starting fluid line is completely dried.

2 and 3 replace caps at the fill and vent ports. All three crewmen decontaminate the missile and rail as well as the tools and clothing if any of the UDMH has been spilled or exposed.

1 writes above the fill port, "deslugged and flushed" and the date.

Crewmen remove protective clothing and replace all equipment.

*Note.* A new starting fluid drain kit is to be issued in the near future to drain the missile of UDMH. Until this kit is available, a small modification of the transfer tube assembly will be made by the using unit. Use an allen wrench, loosen the allen cap screw of the split

metal clamp. Then bring the vent spike level with the drain spike and tighten the allen cap screw to hold it in this position.

## 314. Fuel Tank Draining Procedure

(fig. 185)

**2** raises the dolly to its fully extended (raised) position by inserting the two-speed sockets and handles in the elevating gear fitting and cranks the missile slowly into position.

**1** removes the fuel tank vent plug and installs the fuel vent adapter and vent line (station 151.067). The fuel vent position is identified by a red spot 1½ inches in diameter.

**2** lowers the missile to the horizontal position.

**2** removes the fuel tank filler plug and installs the fuel drain nozzle in the filler fitting. The filler fitting position is identified by a red spot 2¼ inches in diameter. Do not attempt to remove the teflon stopper before installing the drain nozzle.

**1** removes the fuel tank drain plug (station 167.287) and connects the drain line assembly to the fuel tank drain opening.

**1** inserts the end of the drain line assembly into an empty 10-gallon container.

**2** opens the drain nozzle installed in the filler fitting as follows:

*a.* Engage the teflon stopper by turning the small outer knob clockwise until the stopper is fully engaged.

*b.* Extract the stopper and open the nozzle by turning the large knob clockwise until the large knob is free from the threads.

*c.* Pull the knob out to its fully extended position.

**2** rotates the missile until tunnel 1 is down and then slowly raises the dolly until it is in its fully extended (raised) position.

When draining stops, **2** lowers the missile to the horizontal.

**2** rotates the missile so that tunnel 1 is up.

**2** removes the vent line assembly and reinstalls the vent plug.

**1** removes the drain line assembly, installs a new teflon stopper loosely in the filler fitting, and reinstalls the filler plug. Remove the used teflon stopper from the drain nozzle.

**1** and **2** take all tools and equipment to the decontamination area, clean the tools and equipment, and store them in the draining kit and tool pack.

## 315. Removal of Oxidizer

*a. Oxidizer Tank Draining.*

Full protective clothing will be worn. While **3** and **4** are working, **1** and **2** will standby as the relief crew. The relief crew will have full protective clothing on except for the hood. The missile will be raised or lowered as required by extending and retracting the universal handling dolly.

**3** rotates the missile so that tunnel 1 is up and then raises the handling dolly to its completely extended (raised) position.

**3** removes the vent plug from the oxidizer tank and installs the vent adapter, the curved extension pipe, and the overboard vent line and valve.

***Caution:*** Stand upwind when removing the vent plug. First loosen the plug slightly to allow the internal and external pressures to equalize.

**4** connects the drum vent line to the drum adapter fitting and extends it a safe distance downwind from the missile and working personnel.

**4** caps one side of the drum wye fitting and connects the missile forward drain line assembly to the other end of the wye fitting.

**3** lowers the missile to the horizontal and removes the oxidizer tank filler plug and installs the oxidizer filler drain valve. Do not attempt to remove the teflon stopper from the filler fitting before connecting the drain valve.

**3** raises the nose of the missile to a 15° angle. He then withdraws the teflon stopper by turning the small outer knob clockwise until the stopper is fully engaged and then turning the large knob clockwise until it is free from its threads. This will extract the stopper.

**3** opens the vent line valve. Insure that the oxidizer tank drain valve is closed. Open the oxidizer filler fitting by pulling the knob fully out.

**4** opens the wye fitting drain valve and observes the flow through the sight window at the wye fitting. Allow the missile to remain in this position until drainage

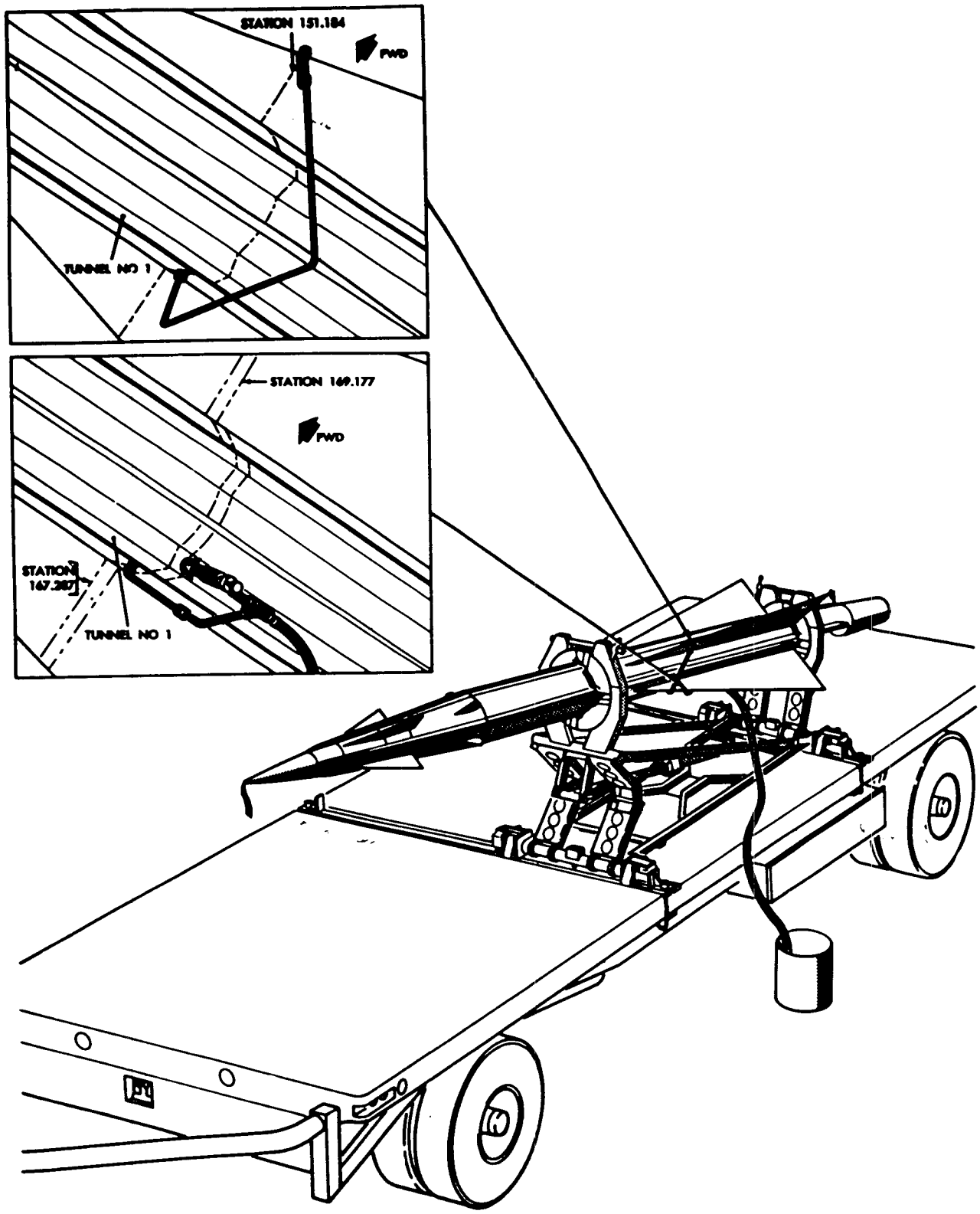


*Figure 185. Fuel draining.*

stops. See A, figure 186. (Oxidizer fumes may be visible in the form of a reddish-brown haze extending 3 to 5 feet from the end of the drum vent line. This vapor is harmful to personnel and should be dissipated into the atmosphere and blown harmlessly away.)

**3** removes the oxidizer tank drain plug and installs the oxidizer tank adapter and drain valve.

**3** and **4** close all valves.

**3** rotates the missile 180° counterclockwise (looking forward) until tunnel number 1 is down and elevates the missile to 15° noseup position. Open all valves. Allow the missile to remain in this position until drainage ceases. See B, figure 186.

**3** depresses the nose of the missile to the maximum down position (approximately 3°). All acid in the line except that trapped at the aft end will flow into the space between the bottom pan of the hopper and the bottom of the tank, then into the drain drum. See *C*, figure 186.

**3** rotates the missile until tunnel No. 1 is up (D, fig. 186). Wait 1 minute.

**3** rotates the missile until tunnel No. 1 is down. This allows the acid in the center portion of the line to flow into the tank. Allow the missile to remain in this position until drainage ceases.

**3** raises the missile nose to a 15°-up position. Keep the missile in this position for approximately 15 minutes to drain any liquid adhering to the walls of the tank and the hopper.

**3** depresses the missile to the horizontal and rotates the missile until tunnel No. 1 is up.

*b. Removal of Drain Fittings and Lines.*

**3** closes the valve on the overboard vent line, removes the vent line assembly from the tank vent opening, and reinstalls the vent plug in the missile.

**4** closes the oxidizer drain nozzle. (Use the large knob only to avoid reinserting the teflon stopper.)

**4** closes the oxidizer drain valve.

**4** disconnects the drain nozzle and drain valve assemblies from the missile and installs a new teflon stopper loosely in the filler fitting.

**3** reinstalls the filler and vent plugs.

**4** removes the teflon stopper from the drain nozzle.

*c. Decontamination of Oxidizer Equipment.* **1** and **2** carry all the tools and equipment used in the oxidizer draining procedure to the decontamination area, decontaminate the tools and equipment, clean, and then replace the equipment in the tool pack and draining kit.

*d. Oxidizer Tank Flushing.* If the missile powerplant system is to be disassembled or if any of the propellent lines are to be uncoupled after the missile is drained, the oxidizer tank must be removed, recapped, and immediately returned to Ordnance for disassembly, flushing, and drying.

## 316. Disposition

The missile and booster should be returned to the assembly and test area. The disposition at that area will depend upon the nature of the required repairs. If the difficulties cannot be repaired in the assembly area, the logbook entries will be completed as required, the nature of the troubles noted, and the missile secured in a shipping container for return to Ordnance.

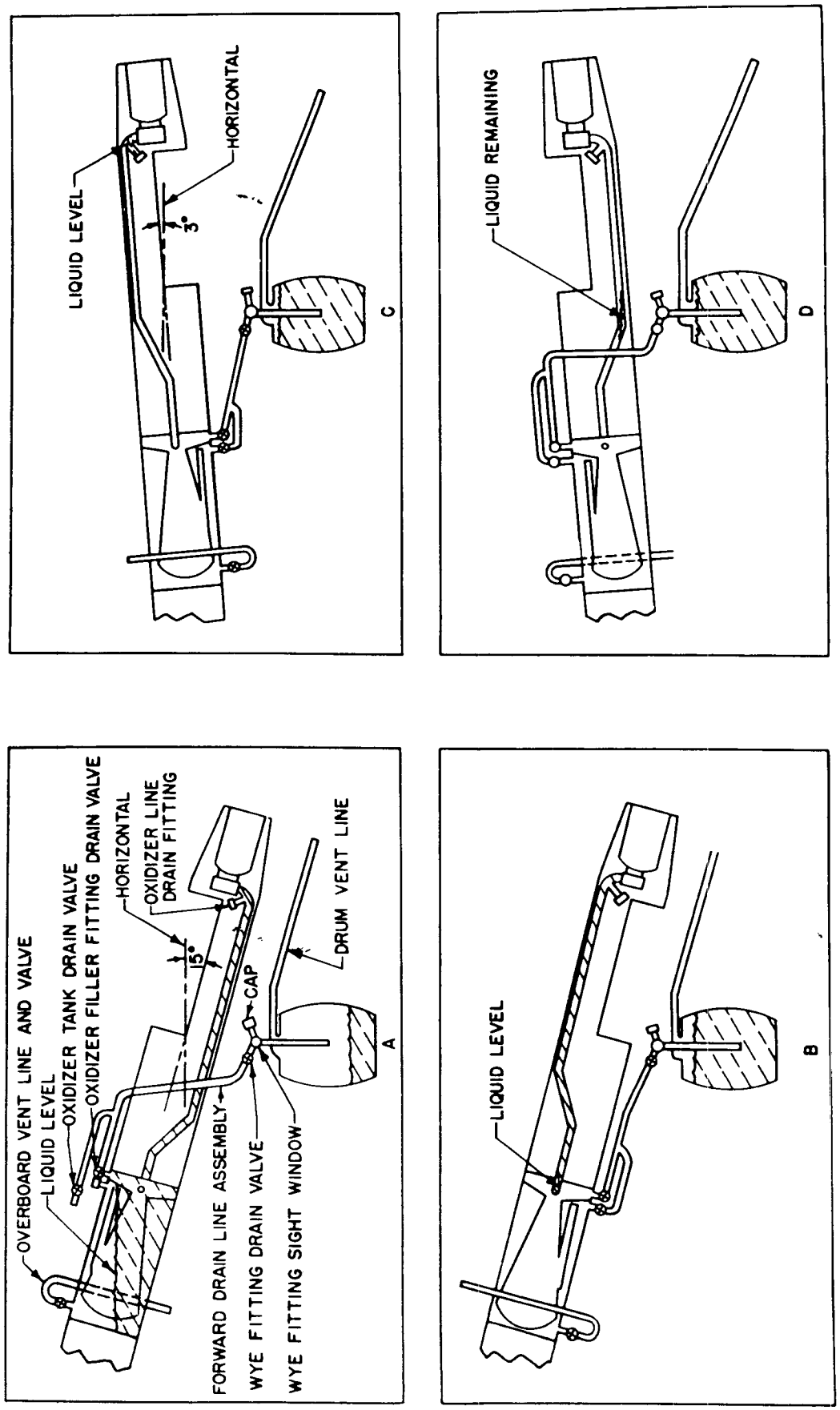


*Figure 186. Oxidizer tank draining.*

# PART THREE
# SECTION DRILL
# CHAPTER 12
# BATTERY CONTROL AREA

## 317. Objective

The objective of section drill is the attainment of efficiency: Maximum precision coupled with high speed.

## 318. Instructions

*a*. To develop maximum efficiency and to prevent injuries to personnel and damage to equipment, the drills herein prescribed must be observed. Section drill will be conducted in silence except for commands and reports. The section must be drilled until reactions to commands are automatic, rapid, and efficient.

*b*. Mistakes are corrected immediately. Each member of the section must be impressed with the importance of reporting promptly to the battery control officer any mistakes discovered after the battery is in an alert status. Any member of the section who discovers any mistake or error which may cause the loss of a missile must immediately report the facts to the battery control officer (BCO).

*c*. For the purpose of this drill, the chief of section may perform the duties which are performed by the battery control officer during an engagement.

*d*. The procedure contained herein is intended only as a guide. The alert status is not material but the procedural steps performed by the operators should be in the sequence shown. The alert status in which the system is placed will be dependent upon local conditions except that the system must be in red alert in order to fire a missile. In all except practice drills, the BCO will not go into ~~blue alert~~ RED STATUS unless the target is declared hostile by the AAOC or commits a hostile act. To insure compliance therewith, each command during a practice drill will be *preceded and followed* by the word EXERCISE.

*e*. All sections in the battery control area and launching area will perform their respective drills simultaneously.

*f*. The drill in the battery control area is the same for both underground storage magazine and aboveground type installations.

*g*. Figures 187, 188, and 189 show the scope presentations.

## 319. Forming the Section

*a*. *Fall In*. The battery control officer takes his post on the left side of the BC trailer (the front of this trailer is defined as the drawbar end) and facing away from it. He commands FALL IN. The section forms in a single rank at close interval three paces from, centered on, and facing the battery control officer. From right to left, the members of the section are as follows: acquisition radar operator, computer operator, generator operators, TTR azimuth operator, TTR elevation operator, TTR range operator and MTR operator.

*b*. *Call Off*. The section being in formation, the battery control officer commands CALL OFF. The switchboard operator and early warning plotter are not included at this point since they are on duty at their stations in the battery control trailer.

All personnel in ranks, except the acquisition radar operator, execute eyes right.

The section then calls off in sequence. As each man calls out his designation, he turns his head and eyes smartly to the front.

Acquisition radar operator reports ACQUISITION OPERATOR.

Computer operator reports COMPUTER OPERATOR.

Generator operators each report GENERATOR OPERATOR.

TTR azimuth operator reports AZIMUTH OPERATOR.

370064 O—56——23

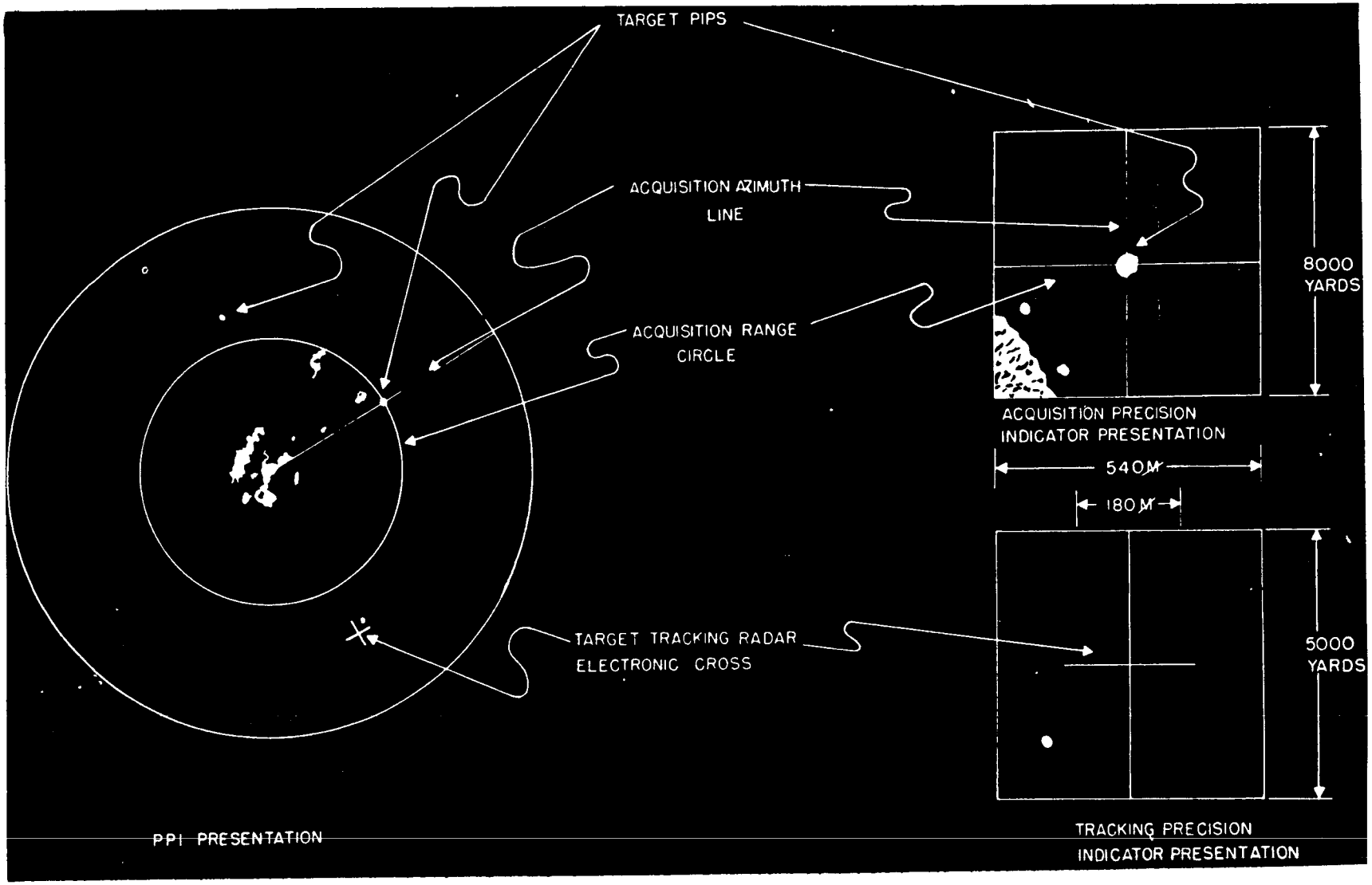


*Figure 187. Acquisition radar scope presentation.*

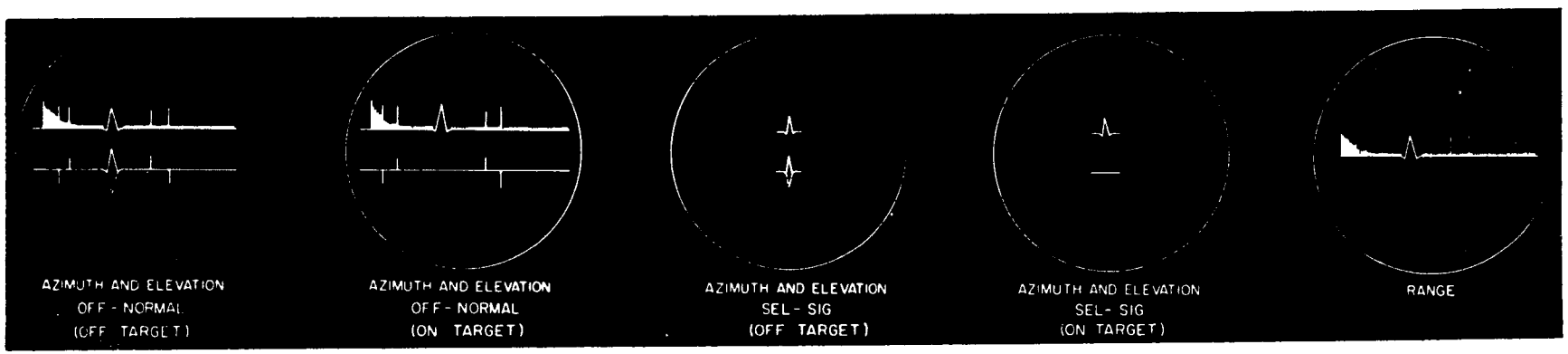


*Figure 188. Target-tracking radar scope presentation.*

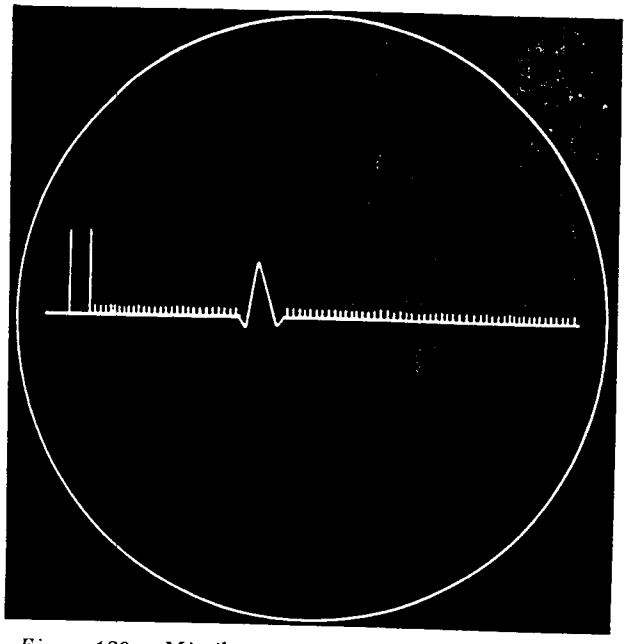

*Figure 189. Missile-tracking radar scope presentation.*

TTR elevation operator reports ELEVATION OPERATOR.

TTR range operator reports RANGE OPERATOR.

MTR operator reports MISSILE OPERATOR.

## 320. Posts

The section being in formation, the battery control officer commands POSTS. Members of the section move to their duty stations as follows:

BCO: In the BC trailer, seated at the battery control console, facing the PPI scope.

Acquisition radar operator: In the BC trailer, seated at the battery control console, facing the acquisition control panel.

Computer operator: In the BC trailer, seated at the battery control console, facing the tactical control panel.

Generator operators: At their generators.

TTR azimuth operator: In the radar control trailer, seated facing the azimuth indicator on the target console assembly.

TTR elevation operator: In the radar control trailer, seated facing the elevation indicator on the target console assembly.

TTR range operator: In the radar control trailer, seated facing the range indicator on the target console assembly.

MTR operator: In the radar control trailer, seated facing the missile console.

## 321. Report

After reaching their posts of duty, the following operators will adjust their telephone headsets and prepare to report. The battery control officer commands REPORT. The operators report to the battery control officer in the following order. The switchboard must be conference-connected to provide common communication to all operators during the white alert status.

Acquisition radar operator reports ACQ OPERATOR.

Computer operator reports COMPUTER OPERATOR.

Switchboard operator reports SWITCHBOARD OPERATOR.

Generator operator reports GENERATOR OPERATOR.

TTR azimuth operator reports TARGET OPERATOR.

MTR operator reports MISSILE OPERATOR.

## 322. Examine Equipment

The section being at their posts, the battery control officer commands EXAMINE EQUIPMENT. Each member of the section makes a visual inspection of all equipment for which he is responsible with particular attention to all meters. Any meter not showing a zero reading will be zero-set by a maintenance man. The battery control officer commands REPORT. Each member of the section reports to the battery control officer in the following order:

Acquisition radar operator reports ACQ OPERATOR READY.

Computer operator reports COMPUTER OPERATOR READY.

Switchboard operator reports SWITCHBOARD OPERATOR READY.

Generator operator reports GENERATOR OPERATOR READY.

TTR azimuth operator, after receiving reports from the TTR elevation and range operators, reports TARGET OPERATOR READY.

MTR operator reports MISSILE OPERATOR READY.

## 323. Prepare to Power the Equipment

After the equipment has been examined and each member of the section has reported, the battery control officer commands PREPARE TO

POWER EQUIPMENT. The members of the section perform the duties shown in paragraph 325.

## 324. Fall Out

When it is desired to give the section a rest or relieve them temporarily from their posts, the battery control officer commands FALL OUT. The section will remain in the drill area. During these periods, the battery control officer may direct his men to improve the positions, perform maintenance, or do other necessary work. When fall out is given, only the high-voltage will be turned OFF, the transmitters deenergized, and the rotation of the acquisition antenna stopped.

## 324.1. Status Checklist

The BCO should keep a status checklist which indicates the completion of the status checks. As each report is received, the BCO should place a check mark in the appropriate column. The following table may be used:

| | Acq | Swbd | Comp | TTR | MTR | L/area |
|---|---|---|---|---|---|---|
| White | | | | | | |
| Yellow | | | | | | |
| Blue | | | | | | |
| Red | | | | | | |

## 325. Preparing to Power Equipment

The duties of each crew member in preparing to power battery control area equipment are set forth in *a* through *i* below.

*a. Battery Control Officer.* ON TARGET DESIGNATE CONTROL PANEL, Turn LOCAL-REMOTE switch to LOCAL (right).

*b. ACQ Radar Operator.*

(1) ON THE ACQ POWER CONTROL PANEL, insure that the following switches are in the OFF position:

(*a*) Main Power.
(*b*) Acquisition Power.
(*c*) Plate Volts.
(*d*) Track Transmitter Filaments.
(*e*) Volts Check.
(*f*) Battleshort.
(*g*) Insure that the ADJUST PHASE C control knob is fully counterclockwise.
(*h*) Insure that the PHASE rotary switch is in the C position.

(2) ON THE ACQ CONTROL PANEL, insure that the following switches are in the OFF position:

(*a*) IND HV.
(*b*) Atenna Azimuth.
(*c*) MTI.

(3) ON THE ACQ CONTROL PANEL, insure that the following control knobs are fully counterclockwise:

(*a*) HV Supply.
(*b*) STC.
(*c*) Insure that the AFC switch is in the ON position.

(4) ON THE PPI:

(*a*) Operate the RANGE switch to the 120,000-yard position.
(*b*) Rotate the INTENSITY and GAIN control knobs fully counterclockwise.

(5) ON THE PRECISION INDICATOR:

(*a*) Turn the TRACK-ACQ switch to ACQ.
(*b*) Rotate the GAIN control knob fully counterclockwise.
(*c*) Rotate the INTENSITY control knob fully counterclockwise.

(6) Report ACQ OPERATOR READY FOR WHITE STATUS.

*c. Computer Operator.*

(1) ON THE COMPUTER POWER CONTROL PANEL, insure that the following switches are in the specified position:

(*a*) Computer Power-Off.
(*b*) Plate Volts-Off.
(*c*) Servo DC-Off.
(*d*) Volts Check-Off.
(*e*) Both Static Test-position 1.

(2) ON THE COMPUTER CONTROL PANEL, insure that the COMPUTER CONDITION switch is in STANDBY.

(3) ON THE TACTICAL CONTROL PANEL, insure that the following switches are in the specified position:

(*a*) PLOTTING BOARD CONDITION-STANDBY.
(*b*) CEILING LIGHTS-DIM.
(*c*) Trailer vents open as required.

(4) Report COMPUTER OPERATOR READY FOR WHITE STATUS.

*d. Switchboard Operator.*

(1) ON THE EVENT RECORDER CONTROL PANEL:

(*a*) Turn the VIEW-RECORD switch to RECORD.

(*b*) Turn the TEST-OPERATE switch to TEST.

(*c*) Conference-connect the BCO, missile-tracking radar operator, generator operator, and switchboard operator.

(*d*) Turn WIRE-CABLE-RADIO switch to CABLE.

(*e*) Turn VIS-AUD switch to AUD.

(*f*) Connect operator's handset-headset to operator's pack.

(*g*) Insure dummy jacks are in TECH and COMMAND hot loop jacks.

(2) Report SWITCHBOARD OPERATOR READY FOR WHITE STATUS.

*e. Generator Operator.*

(1) Perform a visual check of the cable connections at each generator and at the BC and radar control trailers.

(2) Insure that the following switches are in the specified position:

(*a*) MAIN-OFF.

(*b*) VOLTAGE-REGULATOR ON OFF-ON.

(*c*) VOLTAGE & FREQUENCY LOCAL-REMOTE-LOCAL.

(*d*) UNIT-PARALLEL-UNIT.

(*e*) Emergency overload-OFF.

(*f*) Adjust the AC VOLTS and AC AMPERES meters to zero.

(*g*) Start the generators, allow them to warm up to operating temperature (160°–180° F.), and push the throttle control fully in.

(*h*) Using the ENGINE SPEED CONTROL pushbuttons, adjust the engine speed to obtain the correct NO-LOAD reading on the FREQUENCY meter.

(*i*) Using the REGULATOR RHEOSTAT, adjust voltage to obtain the correct NO-LOAD reading on the ac VOLTS meter.

(*j*) During the entire engagement the generator operator should insure proper frequency and voltage. The generator operator cannot control the voltage once the equipment is placed in remote operation.

(3) Report GENERATOR OPERATOR READY FOR WHITE STATUS.

*f. TTR Azimuth Operator.*

(1) ON THE RADAR POWER CONTROL PANEL, insure that the following switches are in the specified position:

(*a*) MAIN POWER-OFF.

(*b*) PHASE-C.

(*c*) TARGET POWER-OFF.

(*d*) TARGET PLATE VOLTS-OFF.

(*e*) TARGET VOLTS CHECK-OFF.

(*f*) BATTLESHORT-OFF.

(*g*) Rotate the ADJ PHASE C control knob fully counterclockwise.

(2) ON THE TARGET TRACK CONTROL PANEL, insure that the IND HV switch is in the OFF position. Insure that the HV SUPPLY control knob (START-MAX) is fully counterclockwise.

(3) ON THE PRECISION INDICATOR:

(*a*) Insure that the ACQ-TRACK switch is in the TRACK position.

(*b*) Insure that the INTENSITY and GAIN control knobs are fully counterclockwise.

(4) ON THE AZIMUTH INDICATOR:

(*a*) Turn the IMAGE SPACING switch to NORMAL.

(*b*) Rotate the INTENSITY control knob fully counterclockwise.

(5) ON THE TARGET CONTROL DRAWER, turn the:

(*a*) Azimuth MAN-AID-AUTO switch to MAN.

(*b*) DISABLE switch to NOT DISABLE (down).

(*c*) SERVOS switch to NORMAL.

(*d*) TEST-OPERATE switch to OPERATE (down).

(6) After receiving reports from the TTR elevation and range operators, report TTR OPERATORS READY FOR WHITE STATUS.

*g. TTR Elev Operator.*

(1) ON THE ELEVATION INDICATOR:

(*a*) Turn the IMAGE SPACING switch to NORMAL.

(*b*) Rotate the INTENSITY control knob fully counterclockwise.

(2) ON THE TARGET-TRACK CONTROL DRAWER:

(*a*) Turn the elevation MAN-AID-AUTO switch to MAN.

(*b*) Open trailer vents as required.

(3) Report to the TTR azimuth operator ELEVATION READY.

*h. TTR Range Operator.*

(1) ON THE RANGE INDICATOR:

(*a*) Turn the IMAGE SPACING switch to OFF.

(*b*) Rotate the INTENSITY control knob fully counter-clockwise.

(2) ON THE TARGET-TRACK CONTROL DRAWER:

(*a*) Turn the range MAN-AID-AUTO switch to MAN.

(*b*) Set the RANGE CALIBRATE switch to NORMAL.

(3) Report to the TTR azimuth operator RANGE READY.

*i. MTR Operator.*

(1) ON THE RADAR POWER CONTROL PANEL, insure that the following switches are in the specified position:

(*a*) MISSILE POWER-OFF.

(*b*) MISSILE PLATE VOLTS-OFF.

(*c*) MISSILE VOLTS CHECK-TARGET.

(2) ON THE MISSILE TRACK-CONTROL PANEL:

(*a*) Insure that the HV SUPPLY (START-MAX) control knob is fully counterclockwise.

(*b*) Insure that the IND HV switch is in the OFF position.

(*c*) Insure that the AGC-MANUAL switch is in the AGC position.

(3) ON THE MISSILE TRACK CONTROL DRAWER:

(*a*) Turn each of the three MAN-AID-AUTO switches to AUTO.

(*b*) Turn the SERVOS switch to NORMAL.

(*c*) Set the RANGE CALIBRATE switch to NORMAL.

(*d*) Set the TEST-OPERATE switch to OPERATE (down).

(*e*) Set the DISABLE switch to DOWN (not disable) and the switch cover DOWN.

(4) ON THE MISSILE EQUIPMENT-DRAWER, turn the TARGET STANDBY-MISSILE rotary switch to STANDBY.

(5) ON THE MISSILE INDICATOR PANEL, turn the:

(*a*) LOCAL DESIGNATE switch to the DOWN position.

(*b*) MISSILE READY switch to the DOWN position.

(6) ON THE RANGE INDICATOR insure:

(*a*) IMAGE SPACING switch is in the OFF position.

(*b*) INTENSITY control knob is fully counterclockwise.

(7) Report MISSILE OPERATOR READY FOR WHITE STATUS.

## 326. Prepare for Action (White Status)

The equipment having been examined and the generators started:

*a.* If the members of the section are at their posts, the battery control officer commands PREPARE FOR ACTION, WHITE STATUS. The members of the section perform the duties shown in *c* through *k* below.

*b.* If the members of the section are in formation or in the status of FALL OUT, the battery control officer commands PREPARE FOR ACTION, WHITE STATUS. The members of the section take their posts and perform the duties shown in *c* through *k* below.

*c. Battery Control Officer.*

ON THE TACTICAL CONTROL PANEL, Turn the ALERT STATUS rotary switch to WHITE.

*d. ACQ Radar Operator.*

(1) ON THE ACQUISITION POWER CONTROL PANEL:

(*a*) Adjust ADJ PHASE C control knob until the LINE VOLTS meter reads 120 VOLTS. When the correct NO-LOAD settings are used at the generator, an adjustment of the ADJ PHASE C knob is required.

(*b*) Turn PHASE switch to B and then to A positions.

(*c*) Read LINE VOLTS meter. Phases A and B should read $120 \pm 2.5$ volts. Report to the battery control officer if line-volts check is not within this tolerance.

(*d*) Turn the MAIN POWER switch to ON.

(*e*) Turn the ACQUISITION POWER switch to ON. Following sequence of events takes place: Blue INTLK indicator light is illuminated. Five seconds later white HIGH VOLTS PREHEAT indicator light is illuminated.

(*f*) Twenty seconds later amber PLATE VOLTS indicator light illuminates.

(*g*) Fifteen minutes later delay timer is energized.

(*h*) When PLATE VOLTS READY indicator light is illuminated turn PLATE VOLTS switch to ON. The PLATE VOLTS READY indicator light is extinguished and the PLATE VOLTS ON indicator light is illuminated. Check dc outputs of the power supplies on the VOLTS CHECK meter. Insure TRACK-TRANSMITTER FILAMENT switch is OFF and the red TRACK TRANSMITTER FILAMENT indicator light is not illuminated.

(2) ON THE ACQUISITION CONTROL PANEL:

(*a*) Turn the ANTENNA AZIMUTH switch to the 10 position. Turn the IND HV-OFF switch to ON.

(*b*) When the green HV SUPPLY-READY indicator light is illuminated (after a 15-minute time delay), depress the HV SUPPLY ON pushbutton. The HV SUPPLY ON indicator light and the HIGH VOLTS ON indicator light on the ACQUISITION POWER CONTROL panel illuminate.

(*c*) The HIGH VOLTS PREHEAT, HIGH VOLTS HOT, HIGH VOLTS READY, and INTLK indicator lights on the ACQUISITION POWER CONTROL panel will be extinguished.

(*d*) Turn HV SUPPLY control knob clockwise until the MAGNETRON-HV SUPPLY meter reads within the limits specified by maintenance personnel.

(3) ON THE PPI:

(*a*) Depress the ring switch.

(*b*) Adjust INTENSITY control knob until the steerable azimuth line is visible.

(*c*) Release the ring switch.

(*d*) Adjust the scope GAIN control until the range circle and flashing azimuth line are visible.

(4) ON THE ACQUISITION CONTROL PANEL:

(*a*) Rotate the RECEIVER GAIN control knob fully clockwise.

(*b*) Adjust the STC control knob until ground-clutter bloom just disappears.

(5) ON THE PRECISION INDICATOR:

(*a*) Adjust the INTENSITY control knob until a trace is clearly visible and there is no backtrace.

(*b*) Adjust GAIN control knob to obtain proper noise level.

(6) ON THE ACQUISITION CONTROL PANEL:

(*a*) Set the ANTENNA ELEVATION switch to the desired value using the UPDOWN SCAN switch.

(*b*) Obtain the desired frequency by observing the FREQUENCY meter and adjusting INCREASE-DECREASE switch.

(7) Report, ACQ RADAR READY FOR YELLOW STATUS.

*e. Computer Operator.*

(1) ON THE LEFT AMPLIFIER EQUIPMENT FRAME, set the OL THRESHOLD control to the setting specified by BCO.

(2) ON THE RIGHT AMPLIFIER EQUIPMENT FRAME, set the BURST TIME BIAS control to the setting specified by BCO.

(3) ON THE COMPUTER CONTROL PANEL, set the LOCATION OF MISSILE RADAR FROM TARGET RADAR-YDS and the LOCATION OF LAUNCHER FROM TARGET RADAR-YDS parallax dials to the settings specified by the chief of section.

(4) IN TRAILER, turn ultraviolet lights ON.

(5) ON THE COMPUTER POWER CONTROL PANEL:

(*a*) Turn the COMPUTER POWER switch to ON. The 3 COMPUTER POWER ON indicator lights illuminate.

(*b*) After 30 seconds, the white INTLK READY lamp illuminates.

(*c*) Turn the PLATE VOLTS switch to ON.

(*d*) Check the dc outputs of the computer power supplies on the VOLTS CHECK meter.

(*e*) After the white PLATE VOLTS lamp is illuminated, and the white INTLK READY lamp is extinguished, turn the SERVO DC switch to ON. The white SERVO DC lamp illuminates.

(6) ON THE COMPUTER CONTROL

PANEL, turn the COMPUTER CONDITION switch to ACTION. The red TEST indicator light will be extinguished.

(7) On the TACTICAL CONTROL PANEL, the red COMPUTER TEST indicator light will be extinguished. Report any persistent flickering of the computer OVERLOAD neon lamp to the BCO.

(8) Report; COMPUTER READY FOR YELLOW STATUS.

*f. Switchboard Operator.*

(1) ON THE EVENT RECORDER:

(*a*) Check the following indicator lights: 400-cycle power-ON. 28-volt DC power-ON.

(*b*) LAMP FAILURE 1—extinguished (Dim when new event recorder is being used).

(*c*) LAMP FAILURE 2—dim.

(*d*) Insure TEST-OPERATE switch is in OPERATE position.

(*e*) LAMP FAILURE T light dim.

(2) ON TACTICAL CONTROL PANEL, adjust the light controls for very low intensity.

*g. Generator Operator.*

(1) AT THE GENERATOR POWERING THE BC TRAILER:

(*a*) Depress the MAIN POWER ON pushbutton.

(*b*) Turn the VOLTAGE & FREQUENCY LOCAL-REMOTE switch to REMOTE.

(*c*) Report POWER ON BC TRAILER.

(2) AT THE GENERATOR POWERING THE RADAR CONTROL TRAILER:

(*a*) Depress the generator MAIN POWER ON pushbutton. Turn the VOLTAGE & FREQUENCY LOCAL-REMOTE switch to REMOTE.

(*b*) Report POWER ON RADAR trailer to switchboard operator (who relays report to BCO).

(3) Monitor generators for proper performance.

(4) Report, GENERATORS READY FOR YELLOW STATUS.

*h. TTR Azimuth Operator.*

(1) ON THE RADAR POWER CONTROL PANEL:

(*a*) Adjust the ADJ PHASE C control knob until the LINE VOLTS meter reads 120 volts.

(*b*) Adjust the PHASE switch to B, then to A position, and read LINE VOLTS meter. Phases A and B should read 110 to 122.5 volts.

(*c*) Turn the main POWER switch to ON. The blue TARGET INTLK and MISSILE INTLK indicator lights illuminate.

(*d*) Turn the TARGET POWER switch to ON. The white TARGET HIGH VOLTS PREHEAT lamp illuminates.

(*e*) After approximately 30 seconds the amber TARGET PLATE VOLTS READY lamp illuminates.

(*f*) After approximately 5 minutes the amber TARGET HIGH VOLTS HOT and the green TARGET HIGH VOLTS READY indicator lights illuminate.

(*g*) When the TARGET PLATE VOLTS READY indicator light illuminates, turn the TARGET PLATE VOLTS switch to ON. The TARGET PLATE VOLTS READY lamp is extinguished.

(*h*) The TARGET PLATE VOLTS lamp illuminates.

(2) Report, TARGET RADAR READY FOR YELLOW STATUS.

*i. TTR Elev Operator.*

(1) IN TRAILER, turn ultraviolet lights ON.

(2) ON LIGHT CONTROL PANEL, adjust CEILING LIGHTS control for very low intensity.

*j. TTR Range Operator.* No specific duties. Observe for proper radar operation.

*k. MTR Operator.*

(1) ON THE RADAR POWER CONTROL PANEL:

(*a*) Turn the MISSILE POWER switch to ON. The white MISSILE HIGH VOLTS PREHEAT indicator light illuminates.

(*b*) After approximately 30 seconds the amber MISSILE PLATE VOLTS READY indicator light illuminates.

(*c*) After approximately 5 minutes the amber MISSILE HIGH VOLTS HOT and the green MISSILE HIGH VOLTS READY lamps illuminate.

(*d*) After the MISSILE PLATE VOLTS READY lamp is illuminated, turn the MISSILE PLATE VOLTS-OFF switch to ON.

(2) Report, MISSILE RADAR READY FOR YELLOW STATUS.

## 327. Yellow Status

The battery control officer commands YELLOW STATUS. If the members of the section are at their posts, they perform the duties shown below. If the members of the section are in formation or in the status of FALL OUT, they take their posts and perform the duties shown in *a* through *i* below.

*a. Battery Control Officer.*

(1) ON THE TACTICAL CONTROL PANEL, turn the ALERT STATUS rotary switch to YELLOW and depress the ALARM siren pushbutton.

(2) ON THE BATTERY CONTROL SIGNAL PANEL, monitor the MISSILE—NUMBER PREPARED meter to determine the number of missiles prepared for firing.

(3) Direct complete emergency (or prefiring) checks. The BCO must determine which checks (daily or emergency) will be completed, depending upon time elapsed since they were last completed and the early warning time.

*b. ACQ Radar Operator.*

(1) Operate acquisition radar to conduct search for hostile aircraft as directed by battery control officer.

(2) Point out likely targets appearing on PPI to battery control officer.

(3) Turn on and use MTI if required.

(4) Turn on and use STC if required.

(5) Complete the emergency or daily checks if directed by BCO.

*c. Computer Operator.*

(1) Complete the emergency or daily checks if directed by BCO.

(2) Report COMPUTER READY FOR BLUE STATUS to BCO.

*d. Switchboard Operator.*

(1) ON THE SWITCHBOARD PANEL:

(*a*) Insure that the red E of P indicator light is not illuminated.

(*b*) Remove all conference-connections so that the automatically established COMMAND and TECH hot loops will not be interfered with.

(*c*) Notify radio operator of yellow status.

(*d*) Radio operator will turn radio on to standby condition. The radio operator should stand by for emergency firing procedure.

(2) Complete the emergency or daily checks if directed by BCO.

(3) Report SWITCHBOARD READY FOR BLUE STATUS to BCO.

*e. Generator Operator.*

(1) Monitor for proper generator performance.

(2) Complete the emergency or daily checks if directed by BCO.

*f. TTR Azimuth Operator.*

(1) ON THE RADAR POWER CONTROL PANEL, check the dc output of the target radar power supplies on the VOLTS CHECK meter.

(2) ON THE TARGET TRACK CONTROL PANEL, turn the IND HV switch to ON. The IND HV indicator light illuminates.

(3) ON THE PPI:

(*a*) Adjust the INTENSITY control until a trace is clearly visible.

(*b*) Adjust GAIN control to obtain proper noise level.

(4) ON THE PRECISION INDICATOR:

(*a*) Adjust the INTENSITY control until a trace is clearly visible.

(*b*) Adjust the GAIN control to obtain proper noise level.

(5) ON THE AZIMUTH INDICATOR:

(*a*) Adjust the INTENSITY control until a trace is clearly visible.

(*b*) Adjust FOCUS control to obtain a clearly defined trace.

(6) ON THE TARGET TRACK CONTROL PANEL:

(*a*) After the amber TARGET HIGH VOLTS HOT, the green TARGET HIGH READY indicator light on the radar power control panel and the green HV SUPPLY READY indicator light at the target control panel are illuminated.

(*b*) Depress the HV SUPPLY ON pushbutton. The red HV SUPPLY ON and the TARGET HIGH VOLTS ON indicator lights on the radar power control panel are illuminated.

(*c*) The white TARGET HIGH VOLTS PREHEAT, amber TARGET HIGH

VOLTS HOT, green TARGET HIGH VOLTS READY, and the blue TARGET INTLK indicator lights are extinguished. The green HV SUPPLY READY indicator light on the target track control panel is extinguished.

(*d*) Rotate the HV SUPPLY control clockwise until the magnetron-HV SUPPLY meter reads within the limits specified by maintenance personnel. Monitor the output voltage and current of the target high voltage power supply.

(7) Complete the emergency or daily checks if directed by BCO.

(8) After receiving reports from the TTR elevation and range operators report TARGET RADAR READY FOR BLUE STATUS to BCO.

*g. TTR Elev Operator.*

(1) On THE ELEVATION INDICATOR:

(*a*) Adjust the INTENSITY control until a trace is clearly visible.

(*b*) Adjust the FOCUS control to obtain a clearly defined trace.

(2) Complete the emergency or daily checks if directed by BCO.

(3) Report to the TTR azimuth operator ELEVATION READY FOR BLUE STATUS.

*h. TTR Range Operator.*

(1) ON THE TARGET-TRACK RANGE INDICATOR:

(*a*) Adjust the INTENSITY control until a trace is clearly visible.

(*b*) Adjust the FOCUS control to obtain a clearly defined trace.

(2) Complete the emergency or daily checks if directed by BCO.

(3) Report to the TTR azimuth operator ELEVATION READY FOR BLUE STATUS.

*i. MTR Operator.*

(1) On the RADAR POWER CONTROL PANEL, check the dc outputs of the missile radar power supplies on the VOLTS CHECK meter.

(2) TARGET VOLTS CHECK rotary switch must be OFF when the MISSILE VOLTS CHECK is made.

(3) ON THE MISSILE CONTROL PANEL, turn the IND HV switch to ON. The IND HV lamp illuminates.

(4) ON THE RANGE INDICATOR:

(*a*) Adjust the INTENSITY control until a trace is clearly visible.

(*b*) Adjust the FOCUS control until a clearly defined trace is obtained.

(5) ON THE RADAR POWER CONTROL PANEL:

(*a*) After the amber MISSILE HIGH VOLTS HOT, the green MISSILE HIGH VOLTS READY indicator light on the radar power control panel, and the green HV SUPPLY READY indicator light on the missile control panel are illuminated, the green HV SUPPLY READY indicator light will not be illuminated until 5 minutes time delay has elapsed.

(*b*) Depress the HV SUPPLY ON push button. The red HV SUPPLY ON indicator light illuminates. On the RADAR POWER CONTROL PANEL the MISSILE HIGH VOLTS ON indicator light illuminates and the white MISSILE HIGH VOLTS PRE HEAT, amber MISSILE HIGH VOLTS READY, and the blue MISSILE INTLK indicator lights are extinguished.

(*c*) Adjust the HV SUPPLY control until the magnetron HV SUPPLY meter reads within the limits specified by the maintenance personnel.

(*d*) Monitor the output voltage and current of the missile high voltage power supply on the magnetron meter.

(6) ON THE MISSILE TRACK CONTROL DRAWER, Monitor the AZIMUTH and ELEVATION dials on the missile indicating panel and the RANGE dial on the range indicator to ascertain that the MTR antenna has slewed to the test responder. Then make a careful check of the following:

(7) ON THE MISSILE EQUIPMENT DRAWER:

(*a*) The TRANSMITTER ERROR meter reading is below the value specified by the maintenance personnel.

(*b*) The RECEIVED SIGNAL meter reading is above the value specified by the maintenance personnel.

(*c*) The RECEIVER TEST red indicator light is not illuminated.

(*d*) Insure RANGE SLEW switch is in the center (OFF) position.

(*e*) Insure TARGET-STANDBY-MISSILE switch is in the STANDBY position.

(8) ON THE MISSILE INDICATING PANEL, insure that:

(*a*) ELEVATION ERROR meter is at ZERO and steady.

(*b*) AZIMUTH ERROR meter is at ZERO and steady.

(*c*) Amber TEST RESPONDER lamp is illuminated.

(*d*) ELEVATION dial is steady.

(*e*) AZIMUTH dial is steady.

(9) ON THE RANGE INDICATOR:

(*a*) A clean, sharp pip centered in the range notch.

(*b*) RANGE DIAL is steady.

(10) ON THE MISSILE CONTROL PANEL-MAGNETRON-HV SUPPLY meter reading steady magnetron current.

(11) ON THE MISSILE CONTROL DRAWER, check that:

(*a*) TEST switch is in the OPERATE (down) position and its cover down.

(*b*) DISABLE switch in the not disable (down) position and its cover down.

(*c*) RANGE CALIBRATE switch in NORMAL (center) position.

(12) Complete the emergency or daily checks if directed by BCO.

(13) Report MISSILE RADAR READY FOR BLUE STATUS to BCO over command hot loop.

## 328. Blue Status

The system being in YELLOW status and the members of the section at their posts, the battery control officer commands BLUE STATUS. Members of the section perform the duties shown in *a* through *i* below.

*a. Battery Control Officer.*

(1) ON THE TACTICAL CONTROL PANEL, turn the ALERT STATUS rotary switch to BLUE.

(2) Supervise a continuous search for hostile aircraft.

(3) After the target is declared hostile by the AAOC or commits a hostile act, command ON DECK.

*b. Acquisition Radar Operator.*

(1) Operate acquisition radar and conduct search for hostile aircraft as directed by BCO.

(2) Point out likely targets appearing on PPI to BCO.

(3) Turn on and use MTI as required.

(4) Report ACQ RADAR READY FOR RED STATUS to the BCO.

*c. Computer Operator.* On the TACTICAL CONTROL PANEL—

(1) Adjust the HORIZONTAL and VERTICAL PLOTTING LIGHT control knobs for the desired operating intensity.

(2) Turn PLOTTING BOARD CONDITION switch to REF mark. Right horizontal plotting board pen plots a reference mark at the TTR coordinates. Both altitude plotting pens plot a reference mark indicating zero time to intercept.

(3) After the pens stop at the reference mark, turn the PLOTTING BOARD CONDITION switch to STANDBY. All pens make a short vertical mark upward and return to standby position.

(4) Repeat the ON DECK command over the TECH hot loop as soon as it is given by the BCO.

(5) Report COMPUTER READY FOR RED STATUS to BCO.

*d. Switchboard Operator.*

(1) Record the RECORD number shown on the register.

(2) Check footage counter for feet of remaining film. Record the amount shown.

(3) Report SWITCHBOARD READY FOR RED STATUS to BCO.

*e. Generator Operator.* Observe operation of generator. Report any irregularities to BCO.

*f. TTR Azimuth Operator.* After making inspection of azimuth scope and dials, and after receiving reports from the TTR elevation and range operators, report TARGET RADAR READY FOR RED STATUS to BCO.

*g. TTR elevation Operator.* After making inspection of elevation scope and dials, report to azimuth operator ELEVATION READY FOR RED STATUS.

*h. TTR Range Operator.* After making inspection of range scope and dials, report to azimuth operator RANGE READY FOR RED STATUS.

*i. MTR Operator.* Observe missile-tracking

radar for proper operation. Report MISSILE RADAR READY FOR RED STATUS to BCO over the command hot loop.

## 329. Red Status

The system being in BLUE STATUS and the members of the section at their posts, the battery control officer commands RED STATUS. Members of the section perform the duties shown in *a* through *i* below. The battery is placed in red status only at the option of the BCO. Normally this action will be predicated upon a hostile target approaching the defense. Target acquisition and transfer, while shown here in red status, may, at the discretion of the BCO, be accomplished earlier.

*a. Battery Control Officer.*

(1) *Step R-1.*

(*a*) On the TACTICAL CONTROL PANEL, turn the ALERT STATUS switch to RED.

(*b*) On the BATTERY CONTROL SIGNAL panel, the MISSILE DESIGNATED and the MISSILE READY lights change from amber to green.

(2) *Step R-2.* The MISSILE TRACKED lamp changes from amber to green when the MTR accepts the designated missile.

(3) *Step R-3.* Direct acquisition radar operator in search for targets. Maintain contact with AAOC. Monitor panel lights for signal indications of progress of battery. Assist in acquiring target to be identified.

(4) *Step R-4.* Order acquisition radar operator to CHALLENGE TARGET.

(5) *Step R-5.* If the proper response is received, report FRIENDLY TARGET. If the proper response is not received, report FOE.

(6) *Step R-6.* If the target is FOE and within approximately 100,000 yards range, operate the DESIGNATE-ABANDON switch to DESIGNATE.

(7) *Step R-7.* Monitor for appearance of other targets. Report new targets to AAOC.

(8) *Step R-8.* Continue monitoring operation of battery. Be prepared to fire at the proper time.

(9) *Step R-9.* On the battery control signal panel the TARGET TRACKED indicator light changes from amber to green after the TRACKED pushbutton is depressed by the target-tracking radar azimuth operator. Approximately 4 seconds later the READY TO FIRE light changes from amber to green.

(10) *Step R-10.*

(*a*) After TARGET TRACKED, MISSILE TRACKED, and READY TO FIRE indicator lights are green, the battery is ready to fire. Horizontal plotting board starts plotting coordinates of target position and predicted intercept point. Vertical plotting board right pen starts plotting altitude of predicted intercept point. With information from the plotting boards, his knowledge of restricted areas, his own defense commitments, and limitations on his field of fire, the battery control officer determines the proper time to fire. The missile will not be fired prior to the time the predicted point of intercept is within the 50,000 yards range circle on the horizontal plotting board.

(*b*) When the battery control officer has made his decision to fire, he operates the FIRE switch to ON (up).

(*c*) BCO monitors the horizontal and vertical plotting board pens. In the event the missile behaves erratically, he operates the manual burst switch. In the event the target is declared friendly, and depending on the position of the missile and the target, he operates the manual burst or BURST DISABLE switch.

(*d*) ***Warning:*** IN A PRACTICE DRILL THE BOOSTER IGNITER WILL NOT BE CONNECTED. Therefore when the FIRE switch is operated to on, the missile will not be fired, the LAUNCH indicator light will not change from amber to green, the plotting boards will not plot missile flight data, and the burst indicator light will not change from amber to green. The computer will automatically reject the missile approximately 5 seconds after the FIRE switch is operated to on. In practice drills, when the missile is rejected the BCO should wait approximately 1 minute, and then

operate the MANUAL BURST switch. When the BURST light illuminates, continue as outlined in Step R–12 below.

(*e*) On the BATTERY CONTROL SIGNAL PANEL, the FIRE indicator and the LAUNCH indicator lights change from amber to green, and MISSILE DESIGNATED and MISSILE READY lamps change from green to amber.

(*f*) On the HORIZONTAL PLOTTING BOARD, the pen which was plotting predicted point of intercept starts plotting missile coordinates. The other pen continues to plot target coordinates.

(*g*) On the VERTICAL PLOTTING board, the pen which was plotting predicted intercept altitude starts plotting target altitude. The other pen starts plotting missile altitude.

(*h*) 4 seconds after LAUNCH, the computer takes control of the missile and later issues the burst command to detonate the warheads. The BURST indicator light changes from amber to green.

(*i*) 0.4 second after burst, the MTR will slew to the next designated missile or to the test responder if a missile has not been designated.

(*j*) The MISSILE-TRACKED, READY TO FIRE, and FIRE indicator lights change from green to amber.

(*k*) The computer is automatically reset to the prelaunch condition.

(11) *Step R–11.* If the same target is to be fired upon again, repeat step R–10.

(12) *Step R–12.* If a new target is to be engaged, set the DESIGNATE-ABANDON switch to ABANDON. The TARGET DESIGNATED, TARGET CONFIRMED, TARGET TRACKED, and FOE indicator lights change from green to amber. The new target must be designated and transferred to the target-tracking radar and the red status procedure repeated by all members of the section.

*b. Acquisition Radar Operator.*

(1) *Step R–1 and R–2.* Continue search for likely targets. Report all new targets to BCO.

(2) *Step R–3.*

(*a*) When the target to be acquired and identified is designated by the BCO, depress the ring depress switch of the azimuth control and rotate the control knob to position the steerable azimuth line on the target.

(*b*) Rotate the range handwheel until the range circle passes through the target.

(*c*) Rotate the range handwheel and the azimuth control knob so as to maintain the range circle and the steerable azimuth line on the target as observed on the precision indicator.

(3) *Step R–4.* On order to challenge target, depress the IFF-CHALLENGE pushbutton on the acquisition control panel.

(4) *Step R–5.* On report friendly target, depress IFF-FRIEND pushbutton on the acquisition control panel.

(5) *Step R–6.* On report foe target, depress IFF–FOE pushbutton on the acquisition control panel.

(6) *Step R–7.* Continue tracking the designated target or search for other targets in accordance with local fire control procedures. Inform battery control officer if electronic countermeasures appear and take corrective action.

(7) *Step R–8, R–9, R–10, and R–11.* Continue step R–7 above and monitor scope and dials for proper radar operation.

(8) *Step R–12.* Upon termination of first engagement, track next target designated by BCO (step R–3 above).

*c. Computer Operator.*

(1) *Step R–1.* On the COMPUTER CONTROL PANEL, insure that the COMPUTER CONDITION switch is in the ACTION position.

(2) *Step R–2, R–3, R–4, R–5, R–6, R–7, and R–8.* Observe for proper operation of plotting boards and computer. Report any irregularities to the BCO.

(3) *Step R–9.*

(*a*) ON THE TACTICAL CONTROL PANEL, turn the PLOTTING

BOARD CONDITION switch to OPERATE. When the pens have settled, turn the PLOTTING BOARD CONDITION switch to PLOT. Monitor the GYRO AZIMUTH meter. It should show approximately the same azimuth of the predicted intercept point, as shown on the horizontal plotting board. If these two indications of azimuth are not approximately the same, notify the battery control officer.

(*b*) ON THE BATTERY CONTROL SIGNAL PANEL, monitor the TARGET TRACKED green lamp. If it changes from green to amber, turn the PLOTTING BOARD CONDITION switch to STANDBY.

(*c*) ON THE TACTICAL CONTROL PANEL, monitor the AMPLIFIER UNBALANCE indicator. If there is any flickering after the READY-TO-FIRE green lamp is illuminated on the battery control signal panel, notify the battery control officer.

(4) *Step R-10.* Observe for proper operation of plotting boards and computer. Report any irregularities to the BCO.

(5) *Steps R-11 and R-12.* On the TACTICAL CONTROL PANEL—

(*a*) When the BURST lamp on the battery control SIGNAL PANEL changes from amber to green, turn the PLOTTING BOARD CONDITION switch to OPERATE.

(*b*) If another missile is to be fired at the same target, turn the PLOTTING BOARD CONDITION switch to PLOT as soon as the pens settle.

(*c*) If the target is abandoned, turn the PLOTTING BOARD CONDITION switch to STANDBY.

(*d*) If a new target is to be engaged, repeat the red status procedures above.

*d. Switchboard Operator.*

(1) *Step R-1.*

(*a*) Insure that the amber event recorder ON lamp is illuminated.

(*b*) Insure that the red MOTOR ON lamp is illuminated.

(*c*) Monitor the red E OF P lamp. If it illuminates any time during the red alert status, immediately advise the BCO.

(*d*) Carry on normal switchboard operator duties.

(2) *Step R-2, R-3, R-4, R-5, R-6, R-7, R-8, R-9, R-10, and R-11.* Carry on normal switchboard operator duties. Monitor the event recorder for proper operation. Observe the BURST light after the missile has been fired.

(3) *Step R-12.* Approximately 10 seconds after the BURST lamp on the battery control SIGNAL PANEL changes from amber to green, zero-set the event recorder for 3 seconds by depressing the ZERO-SET pushbutton.

*e. Generator Operator.* During the entire red status procedure, as well as at any other time the generators are operating, the generator operator should monitor the performance of the engine generators.

*f. TTR Azimuth Operator.*

(1) *Step R-1, R-2, R-3, R-4, R-5, and R-6.* Observe the scopes, dials, and indicator lights. Be ready to acquire and track a designated target.

(2) *Step R-7.*

(*a*) When the buzzer sounds and the DESIGNATED indicator light changes from amber to green, hold the acquire switch to the left until the target servos slew to the azimuth and range of the designated target. When the target range and azimuth servos have slewed to the approximate coordinates, the electronic cross on the PPI scope will be superimposed on the intersection of the steerable azimuth line and range circle. The CONFIRMED indicator light changes from amber to green as soon as the ACQUIRE switch is operated to the left. When the CONFIRMED indicator light changes from amber to green, rotate the AZIMUTH handwheel to maintain the radial line of the electronic cross (azimuth line) a little to the right of the target echo in the precision indicator.

***Caution:*** This assumes that the electronic cross has been properly offset during orientation of the acquisition radar.

(*b*) A well-trained crew, with accurately adjusted equipment, may, in some cases, use the procedure given in (*c*) below for step R–7. Tests will determine which is the recommended procedure.

(*c*) When the buzzer sounds and the DESIGNATED light changes from amber to green, hold the ACQUIRE switch to the left. The target range and azimuth servos will slew to the approximate coordinates of the designated target. The electronic cross on the PPI scope will be superimposed on the intersection of the steerable azimuth line and range circle. The CONFIRMED indicator light changes from amber to green.

(3) *Step R–8.*

(*a*) At the report elevation on target; (release the acquire switch if not already done); rotate the azimuth tracking control handwheel to move the error pip into the lower base line until the error pip disappears.

(*b*) After the report range in auto is received, turn the azimuth MAN-AID-AUTO switch to AUTO.

(*c*) After the target is tracked in automatic, be prepared to use aided-manual tracking if necessary.

(*d*) After reports are received from the elevation and range operators, depress the TRACKED pushbutton. On the TARGET SIGNAL panel, the TRACKED indicator light changes from amber to green. If all indications are not proper, do not depress the TRACKED pushbutton. Report any deficiency to the BCO.

(4) *Steps R–9.* Observe the scope and dials. Be prepared to track in aided-manual if necessary.

(5) *Step R–10.*

(*a*) After the fire switch is operated by the BCO, the FIRE indicator light on the TARGET SIGNAL PANEL changes from amber to green. The LAUNCH indicator light changes from amber to green.

(*b*) When the burst command is sent, the BURST indicator light changes from amber to green.

(*c*) The FIRE, LAUNCH, and BURST indicator lights change from green to amber.

(6) *Step R–11.* Repeat step R–10 above.

(7) *Step R–12.*

(*a*) If the DESIGNATE light on the TARGET CONTROL DRAWER changes from green to amber, turn the azimuth MAN-AID-AUTO switch to MAN.

(*b*) Repeat steps R–7 and R–8 above for a new target.

*g. TTR Elevation Operator.*

(1) *Steps R–1, R–2, R–3, R–4, R–5, and R–6.* Observe the scope, dials, and indicator lights. Be ready to acquire and track a designated target.

(2) *Step R–7.*

(*a*) When the TARGET CONFIRMED indicator light changes from amber to green, search manually in elevation with the elevation control handwheel until an error pip appears near the gate on the elevation indicator.

(*b*) When the error pip appears, rotate the handwheel to move the error pip into the lower baseline until the error pip disappears.

(3) *Step R–8.*

(*a*) Report ELEVATION ON TARGET to TTR azimuth operator.

(*b*) After the report range in auto, turn the MAN-AID-AUTO switch to AUTO. Report ELEVATION IN AUTO to azimuth operator.

(*c*) After the target is tracked in automatic, be prepared to use AIDED-MANUAL tracking if necessary.

(4) *Steps R–9, R–10, and R–11.* Observe scope and dials. Report any irregularities to azimuth operator. Be prepared to track in AIDED-MANUAL if required.

(5) *Step R–12.*

(*a*) If the DESIGNATED lamp on the TARGET CONTROL DRAWER changes from green to amber, turn the elevation MAN-AID-AUTO switch to MAN.

(*b*) Repeat steps R–7 and R–8 above for a new target.

*h. TTR Range Operator.*

(1) *Steps R–1, R–2, R–3, R–4, R–5, and R–6.* Observe the scopes, dials, and indicator

lights. Be ready to acquire and track a designated target.

(2) *Step R-7.* When the CONFIRMED indicator light changes from amber to green, rotate the range handwheel to maintain the arc of the electronic cross a little over in range to the target echo on the precision indicator.

*Note.* If the TTR azimuth operator uses the procedure in *f*(2)(*c*) above (step R-7), step R-7 for the range operator will be the same as steps R-1 through R-6.

(3) *Step R-8.*

(*a*) At the report elevation on target, rotate the range tracking control handwheel to place the target pip on the range indicator in the center of the range notch.

(*b*) When the pip is centered in the range notch, turn the range MAN-AID-AUTO switch to AUTO.

(*c*) Report to azimuth operator RANGE IN AUTO.

(*d*) After the target is tracked in AUTO, turn the range MAN-AID-AUTO switch to AID and track the target in aided-manual.

(4) *Step R-9, R-10, and R-11.* Continue to track the target in aided-manual.

(5) *Step R-12.*

(*a*) If the DESIGNATE lamp changes from green to amber, turn the range MAN-AID-AUTO switch to MAN.

(*b*) Repeat steps R-7 through R-11 above for a new target.

*i. MTR Operator.*

(1) *Step R-1.* Monitor scope, dials, and indicator lights for proper radar performance. Report any irregularities to the BCO.

(2) *Step R-2.*

(*a*) On the MISSILE INDICATING PANEL, the appropriate green SECTION and LAUNCHER indicator lights will illuminate to indicate the section selected and the launcher designated. The test responder amber indicator light is not illuminated.

(*b*) On the MISSILE EQUIPMENT DRAWER, after the DESIGNATE and READY indicator lights change from amber to green, ascertain that the antenna and range units have slewed to the coordinates of the designated missile.

(*c*) On the MISSILE EQUIPMENT DRAWER, insure that—

*1.* TRANSMITTER ERROR meter reading is above the value specified by maintenance personnel.

*2.* RECEIVED SIGNAL meter reading is above the value specified by maintenance personnel.

*3.* If the received signal is proper, the missile will be automatically tracked and the TRACKED indicator light will illuminate automatically.

(*d*) On the MISSILE INDICATING PANEL, insure that—

*1.* The ELEVATION ERROR meter reads zero and is steady.

*2.* The AZIMUTH ERROR meter reads zero and is steady.

*3.* The ELEVATION dial is steady.

*4.* The AZIMUTH dial is steady.

(*e*) On the RANGE INDICATOR, insure that—

*1.* There is a clean, sharp pip, centered in the range notch.

*2.* The base line is free of grass.

*3.* The range dial is steady.

(*f*) Check to see if the missile TRACKED indicator light on the missile equipment drawer has changed from amber to green. If this condition is not met, reject the missile. If the missile is rejected, another missile must be designated. After the antenna and range units have slewed to the coordinate of the new missile, the MTR operator must then repeat step R-2.

(3) *Step R-3, R-4, R-5, R-6, R-7, R-8, and R-9.* Monitor the pip, scope, dials, and indicator lights for proper performance. Report any irregularities to the BCO.

(4) *Step R-10.*

(*a*) After the FIRE switch is operated to on at the battery control trailer, the FIRE and LAUNCH indicator lights change from amber to green. The DESIGNATE and READY indicator lights change from green to amber.

(*b*) When the burst command is sent, the BURST indicator light changes from amber to green. 0.4 second after

missile burst, the missile-tracking radar slews to the next missile to be fired, if one has been designated, otherwise to the test responder.

(*c*) When the missile is fired, observe the range scope for appearance of the missile pip at launch.

(*d*) When the missile is on its trajectory, observe the following:

*1*. TRANSMITTER ERROR meter for continued readings less than that value specified by maintenance personnel.

*2*. RECEIVED SIGNAL meter for a small gradual reduction in reading.

*3*. ELEVATION ERROR meter for a large deviation which gradually reduces to about zero.

*4*. AZIMUTH ERROR meter for smooth changes.

*5*. Range scope for pip remaining in center of notch, pip remaining high with only a slight decrease in height as the range increases, and absence of grass on the baseline.

(5) *Step R–11*. Repeat step R–10 above.

(6) *Step R–12*. Repeat red status procedure if another missile is to be fired.

## 330. Deenergizing the Equipment

When the mission is completed, the battery control officer commands DEENERGIZE THE EQUIPMENT. Members of the section perform the duties shown below.

| *Step* | *Battery control officer* | *ACQ radar operator* | *Computer operator* | *Switchboard operator* | *Generator operators* | *TTR azimuth operator* | *TTR elev operator* | *TTR range operator* | *MTR operator* |
|---|---|---|---|---|---|---|---|---|---|
| RO-1 | ON THE TACTICAL CONTROL PANEL—<br>Turn the ALERT STATUS switch to WHITE. | ON THE ACQUISITION CONTROL PANEL—<br>Rotate the HV SUPPLY control fully counterclockwise.<br>Depress the HV SUPPLY OFF pushbutton. The HV SUPPLY OFF indicator light will be illuminated and the HV SUPPLY ON indicator light will be extinguished. The HIGH VOLTS PREHEAT, HIGH VOLTS HOT, HIGH VOLTS READY, and INTLK indicator lights on the acquisition power control panel will be illuminated. | ON THE COMPUTER CONTROL PANEL—<br>Turn the COMPUTER CONDITION switch to STANDBY. On the computer control panel and the tactical control panel, the red TEST indicator light will be illuminated. | ON THE EVENT RECORDER CONTROL PANEL—<br>Turn the TEST-OPERATE switch to TEST. | | ON THE TARGET TRACK CONTROL PANEL—<br>Rotate the HV SUPPLY control fully counterclockwise.<br>Depress the HV SUPPLY OFF pushbutton. The HV SUPPLY READY indicator light is illuminated and the HV SUPPLY ON indicator light is extinguished. On the radar power control panel, the TARGET HIGH VOLTS ON indicator light is extinguished. The amber TARGET HIGH VOLTS READY, TARGET HIGH VOLTS HOT, and the TARGET INTLK indicator lights are illuminated. | | | ON THE MISSILE TRACK CONTROL PANEL—<br>Rotate the HV SUPPLY control fully counterclockwise.<br>Depress the HV SUPPLY OFF pushbutton. The HV SUPPLY READY indicator light is illuminated and the HV SUPPLY ON indicator light is extinguished. On the radar power control panel, the MISSILE HIGH VOLTS PREHEAT, MISSILE HIGH VOLTS READY, the MISSILE HIGH VOLTS HOT, and the MISSILE INTLK indicator lights are illuminated. |
| | | Turn the ANTENNA AZIMUTH switch and the IND HV switches to OFF. The IND HV lamp will be extinguished.<br>ON THE ACQUISITION POWER CONTROL PANEL—<br>Turn the ACQUISITION PLATE VOLTS and the ACQUISITION POWER switches to OFF. | ON THE COMPUTER POWER CONTROL PANEL—Turn the SERVO DC and PLATE VOLTS switches to OFF. The white SERVO DC and PLATE VOLTS indicator lights are extinguished and the white INTLK indicator light is illuminated.<br>Turn the COMPUTER POWER switch to OFF. The white INTLK and the | | | Turn the IND HV switch to OFF. The IND HV indicator light is extinguished.<br>ON THE RADAR POWER CONTROL PANEL—<br>Turn the TARGET PLATE VOLTS switch to OFF. The amber TARGET PLATE VOLTS READY indicator light is illuminated. The red TARGET PLATE VOLTS indicator light is extinguished. | | | Turn the IND HV switch to OFF. The IND HV indicator light is extinguished<br>ON THE RADAR POWER CONTROL PANEL—<br>Turn the MISSILE PLATE VOLTS switch to OFF. The amber MISSILE PLATE VOLTS READY indicator light is illuminated.<br>The red MISSILE PLATE VOLTS indicator light is extinguished. |





409893 O - 57 - 16

| *Step* | *Battery control officer* | *ACQ radar operator* | *Computer operator* | *Switchboard operator* | *Generator operators* | *TTR azimuth operator* | *TTR elev operator* | *TTR range operator* | *MTR operator* |
|---|---|---|---|---|---|---|---|---|---|
| | | | three COMPUTER POWER indicator lights are extinguished. | | | Turn the TARGET POWER switch to OFF. All illuminated indicator lights associated with the target radar are extinguished. | | | Turn the MISSILE POWER switch to OFF. All illuminated indicator lights associated with the missile radar are extinguished. |
| RO-2 | | | | | | ON THE RADAR POWER CONTROL PANEL— Turn the MAIN POWER switch to OFF. | | | |
| RO-3 | ON THE ACQUISITION POWER CONTROL PANEL— Turn the MAIN POWER switch to OFF. | | | | | | | | |
| RO-4 | | | | | AT THE GENERATOR POWERING THE RADAR CONTROL TRAILER: Turn the VOLTAGE & FREQUENCY LOCAL-REMOTE switch to LOCAL. Depress the MAIN POWER OFF push-button. Pull the throttle control fully out. Allow the generator to run at idling speed for approximately 3 minutes. Turn the ignition switch to OFF. AT THE GENERATOR POWERING THE BC TRAILER— Turn the VOLTAGE AND FREQUENCY LOCAL-REMOTE switch to LOCAL. Depress the MAIN POWER OFF push-button. Pull the throttle control fully out. Allow the generator to run at idling speed for approximately 3 minutes. Turn the ignition switch to OFF. | | | | |

# CHAPTER 13

# LAUNCHING CONTROL TRAILER

## 331. Fall In

The platoon leader (launching control officer) takes his post on the left side of the launching control trailer (the front of this trailer is defined as the drawbar end) and facing away from it. He commands FALL IN. The section forms in a single rank at close interval, centered on, facing, and three paces from the platoon leader. From right to left, the members of the section are as follows: Launching control panel operator, switchboard operator, and generator operator.

## 332. Call Off

The section being in formation, the platoon leader commands CALL OFF.

All personnel in ranks, except the launching control panel operator, execute eyes right and report in sequence shown below. As each man calls out his designation, he turns his head and eyes smartly to the front.

Launching control panel operator reports PANEL OPERATOR.

Switchboard operator reports SWITCHBOARD OPERATOR.

Generator operator reports GENERATOR OPERATOR.

## 333. Posts

The section being in formation, the platoon leader commands POSTS. The members of the section move to their individual duty stations as follows:

Platoon leader: Seated at the platoon leader's desk in the launching control trailer.

Launcher control console panel operator: In the launching control trailer, seated facing the launching control console panel.

Switchboard operator: In the launching control trailer, seated at the switchboard.

Generator operator: At the generator.

## 334. Report

After reaching his post of duty, the following operators will adjust their telephone headsets and check communications. The switchboard must be conference-connected. The platoon leader commands REPORT.

The operators report in the following order:

Launcher control panel operator reports PANEL OPERATOR.

Switchboard operator reports SWITCHBOARD OPERATOR.

Generator operator reports GENERATOR OPERATOR.

## 335. Examine Equipment

The section being at their posts, the platoon leader commands EXAMINE EQUIPMENT. Each member of the section makes a visual inspection of all equipment for which he is responsible with particular attention to all meters. The platoon leader commands REPORT. Each member of the section will report in the following order:

Launcher control panel operator reports PANEL OPERATOR READY.

Switchboard operator reports SWITCHBOARD OPERATOR READY.

Generator operator reports GENERATOR OPERATOR READY.

## 336. Power Equipment

After the equipment has been examined and each member of the section has reported, the platoon leader commands PREPARE TO POWER EQUIPMENT. The members of the section perform the duties shown in paragraph 339.

## 337. Fall Out

When it is desired to give the section a rest or relieve them temporarily from their posts, the command FALL OUT is given. This command infers that the section is to remain in the vicinity of the drill area. During these periods the platoon sergeant may direct his men to improve the position, to perform maintenance of equipment, or to do other necessary work. This command in the launching area will be given only after obtaining permission from the battery control officer.

## 338. Reloading Time

The launchers in the above-ground launching sections will be reloaded only during a lull in the engagement. When reloading is required, the launching control officer will, after obtaining permission from the battery control officer direct the launching sections (over TECH HOT LOOP) to RELOAD LAUNCHERS. In the underground type sites, normally the selected section will fire the missile on the elevator. The launching control officer will then select another section to fire and the section having fired will reload its elevator launcher. If a selected section cannot fire the elevator missile, the satellite launcher will be designated. A section should be in the yellow status when reloading satellite launchers.

## 339. Prepare to Power Equipment

Individuals perform the steps listed in *a* through *d* below in preparing to power the equipment.

*a. Platoon Leader.* Command PREPARE TO POWER EQUIPMENT.

*b. Launching Control Panel Operator.*

(1) ON MAIN SWITCH BOX IN LAUNCHING CONTROL TRAILER, turn:

(*a*) MAIN POWER switch to OFF.

(*b*) HEATER and VENT UNIT and RECT switch to OFF.

(2) ON LAUNCHING CONTROL PANEL, turn:

(*a*) POWER switch to OFF.

(*b*) Manual ALERT SELECTOR switch to AUTOMATIC.

(*c*) SECTION SELECTOR switch to NONE.

(*d*) RESPONDER FILAMENT switch to OFF.

(*e*) ALL ON DECK switches to OFF.

(3) READY-TO-FIRE-NOT READY switch to NOT READY.

(4) Connect HANDSET-HEADSET at STATION 1 and STATION 2 and monitor STATION 1.

(5) ON TRAILER, open vents as required.

(6) Report PANEL OPERATOR READY FOR WHITE STATUS.

*c. Switchboard Operator.*

(1) Turn WIRE-CABLE-RADIO switch to CABLE.

(2) Turn VIS-AUD switch to AUD.

(3) Connect operator's headset-handset to operator's pack.

(4) Insure dummy jacks are in tech and command hot loop jacks.

(5) Report SWITCHBOARD OPERATOR READY FOR WHITE STATUS.

*d. Generator Operator.*

(1) Check the cable connections at the generator.

(2) Turn the FIELD RHEOSTAT fully counterclockwise.

(3) Adjust the AC VOLTS and AC AMPERES meters to ZERO.

(4) Operate the VOLTAGE & FREQUENCY LOCAL-REMOTE switch to LOCAL.

(5) Operate the UNIT-PARALLEL switch to UNIT.

(6) Turn the ignition switch to START.

(7) Start the generator and allow it to warm up to operating temperature (160°–180° F.). Choke as required.

(8) Operate the VOLTAGE REGULATOR ON-OFF switch to ON.

(9) Using the ENGINE SPEED CONTROL pushbuttons, adjust the engine speed to obtain a reading of 400 cycles on the FREQUENCY meter.

(10) Using the REGULATOR RHEOSTAT adjust the voltage to obtain a reading of 208 volts on the AC VOLTS METER.

(11) Report GENERATOR OPERATOR READY FOR WHITE STATUS.

## 340. Prepare for Action, White Status

To prepare for action, the equipment having been examined, the generator started, the platoon leader commands PREPARE FOR ACTION, WHITE STATUS. The members of the section perform the duties shown in *a* through *d* below:

*a. Platoon Leader.*

(1) Supervise LCT personnel.

(2) Report WHITE STATUS CHECKS COMPLETED to BCO.

*b. Launching Control Panel Operator.* ON MAIN SWITCH BOX in launching control trailer, turn:

(1) MAIN POWER switch to ON.

(2) CONSOLE POWER switch to ON.

(3) HEAT & VENT POWER & RECTIFIER switch to ON.

(4) Report PANEL OPERATOR READY FOR YELLOW STATUS.

*c. Switchboard Operator.*

(1) Perform normal switchboard duties.

(2) Report SWITCHBOARD OPERATOR READY FOR YELLOW STATUS.

*d. Generator Operator.*

(1) Depress the MAIN POWER ON push-button.

(2) Report POWER ON.

*Note.* During the entire engagement the generator operator should insure proper generator operation.

(3) Report GENERATOR OPERATOR READY FOR YELLOW STATUS.

## 341. Yellow Status

The section being in WHITE STATUS, the ALARM SIREN sounds and the YELLOW status lamp lights in the launching control trailer to signify a yellow status. The platoon leader commands YELLOW STATUS. The members of the section perform the duties listed *a* through *d* below.

*a. Platoon Leader.*

(1) On launching control officer's table, turn the telephone SWITCHBOARD TECH switch to TECH.

(2) Command ALERT ALARM OFF after all sections confirm yellow status received.

(3) Report YELLOW STATUS CHECKS COMPLETED to BCO over command hot loop.

*b. Launching Control Panel Operator.*

(1) Report over STA 1 YELLOW STATUS RECEIVED.

(2) Turn POWER switch ON.

(3) Red FILAMENT indicator light illuminates.

(4) Red SECTION SELECTED indicator light illuminates.

(5) Amber NOT READY indicator light illuminates for each section.

(6) Amber NONE indicator light illuminates for each section.

(7) Red LAUNCHER DESIGNATED indicator light illuminates.

(8) Red MISSILE READY indicator light illuminates.

(9) Green MISSILE REJECT indicator light illuminates.

(10) Amber FIRE COMMAND indicator light illuminates.

(11) Amber LAUNCH ORDER indicator light illuminates.

(12) Amber MISSILE AWAY indicator light illuminates.

(13) Depress ALARM SHUT OFF push-button when directed by platoon leader and report over command hot loop LAUNCHING PLATOON PRESENT.

(14) Monitor MISSILE PREPARED meter for each section.

(15) Report PANEL OPERATOR READY FOR BLUE STATUS to platoon leader.

(16) Read YAW and PITCH meter readings to MTR operator when requested.

*c. Switchboard Operator.*

(1) Connect LCO switchboard position into the command hot loop.

(2) Notify radio operator of yellow status.

(3) Radio operator will turn radio on to standby condition. The radio operator should standby for emergency firing procedure.

(4) Report SWITCHBOARD OPERATOR READY FOR BLUE STATUS to platoon leader.

*d. Generator Operator.* Observe generator for proper operation.

## 342. Blue Status

When the BLUE status lamp lights to signify a BLUE STATUS, the platoon leader commands BLUE STATUS. Members of the section perform the duties listed in *a* through *d* below.

*a. Platoon Leader.* Command ALL SECTIONS ON DECK, when directed by BCO. Report BLUE STATUS CHECKS COMPLETED to BCO over command hot loop.

*b. Launching Control Panel Operator.*

(1) Operate ON DECK-OFF switch for all sections to ON DECK.

(2) Monitor for green SECTION READY and LAUNCHER DESIGNATED identification lights (1, 2, 3, 4).

(3) Report PANEL OPERATOR READY FOR RED STATUS to platoon leader.

*c. Switchboard Operator.* Perform normal switchboard operator duties. Be prepared to implement emergency communication procedures if necessary.

*d. Generator Operator.* Observe generator for proper operation.

## 343. Red Status

When the RED status lamp lights to signify a RED STATUS the platoon leader commands RED STATUS. Members of the section perform the duties listed in *a* through *d* below.

*a. Platoon Leader.*

(1) *Step R–1.* Command SELECT SECTION (A, B, C, D). The section selected must have the section READY and LAUNCHER green indicator lights lighted.

(2) *Step R–2.* Report any abnormal indications to battery control officer over the COMMAND HOT LOOP.

(3) *Step R–3.* When all missile(s) to be fired in the selected section have been fired or rejected the next section must be selected. Command SELECT SECTION (A, B, C, D).

(4) *Step R–4.* Repeat steps R–2 and R–3 above as required to complete engagement.

*b. Launching Control Panel Operator.*

(1) *Step R–1.* Turn SECTION SELECTOR switch to SELECTED section and depress SECTION SELECTED pushbutton.

(2) *Step R–2.*

(*a*) Turn READY TO FIRE—NOT READY switch to READY TO FIRE (up).

(*b*) Monitor launching control console panel for any abnormal indications. Report any abnormal indications to the BCO over the command hot loop, and operate the READY TO FIRE switch to NOT READY (down).

(3) *Step R–3.* Repeat R–1 and R–2 above for next section.

(4) *Step R–4.* Repeat above as required to complete engagement.

*c. Switchboard Operator.* During red status perform normal switchboard operator duties. Be prepared to implement emergency communication procedures if necessary.

*d. Generator Operator.* During red status, observe generator for proper operation.

# CHAPTER 14
# LAUNCHING SECTION

## Section I. UNDERGROUND STORAGE MAGAZINE-TYPE INSTALLATIONS

### 344. Personnel and Equipment Status

*a.* Layout of the launching area and designation of equipment as used in this drill are shown in figures 57 through 60.

*b.* All personnel will remain underground during an engagement. Reloading of satellite launchers will be accomplished only between engagements. At no time will any personnel be allowed aboveground during an engagement. The BCO should receive permission to reload.

*c.* Operations performed at the launching control trailer and in the battery control area are the same as for an aboveground-type installation.

*d.* At all times when the elevator is being raised or lowered, crewman number 1 should be stationed at the elevator master control station. In event of elevator failure, he will turn the elevator power off. This is not included in the drill since he makes no reports. The CS should insure this safety man is at his station in the magazine at all times when the elevator is manned.

### 345. Fall In

To form the section, the chief of section (CS) commands FALL IN. The chief of section gives the command from his post in the vicinity of the personnel room hatch or near the elevator MASTER CONTROL SELECTOR station. The section forms in line in one rank at close interval, facing and centered on the chief of section. From right to left, the members of the section are as follows: section control panel operator, crewman No. 1 (Senior Launcher Crewman), crewman No. 2, crewman No. 3, and crewman No. 4.

### 346. Call Off

The section being in formation, the CS commands CALL OFF. Members of the section report as follows: panel operator reports PANEL OPERATOR. All other men execute eyes right and call off their designation given in paragraph 345, turning their heads and eyes smartly to the front as they report.

### 347. Posts

The section being in formation, CS commands POSTS.

*a.* If aboveground, the section chief, panel operator, and crewmen 2 and 4 descend through the personnel room hatch and crewman 1 and 3 descend on down the magazine hatch.

*b.* CS—Insure crew safety keys are on improvised board in personnel room.

*c.* Panel Operator—Seated facing the section control panel.

*d.* Crewman 4—At LOP No. 4.

*e.* Crewman 3—At LOP No. 3.

*f.* Crewman 2—At LOP No. 2.

*g.* Crewman 1—At LOP No. 1.

### 348. Report the Section

The section being at their assigned posts, CS commands REPORT THE SECTION ALL PRESENT. The panel operator mans telephone STA 1 and reports to the launching control officer SECTION (A, B, C, D) ALL PRESENT, SIR.

### 348.1. Examine Equipment

At the command examine equipment, crew members perform the duties listed in *a* through *f* below.

*a. Chief of Section.*

(1) Remove CREW SAFETY KEYS from wall pin board and keep in possession whenever launchers are manned.

(2) All Nike rounds stored in magazine.

(3) Elevator MASTER CONTROL selector switch in MASTER position.

(4) Supervise section personnel during performance of equipment status check.

(5) Examine elevator electrical and hydraulic power unit.

*b. Panel Operator.*

(1) WHITE status lamp on. Control panel *not* energized.

(2) All switches at OFF, NONE, or AUTO. DC VOLTS meter reading 33.6 volts

±0.3 volts. Handsets connected to STA 1 and 2.

(3) Monitor control panel and maintain contact with LAUNCHING CONTROL VAN by telephone.

(4) Report PANNEL OPERATOR READY FOR WHITE STATUS.

*c. Crewman No. 1.*

(1) Status of launcher operating Panel No. 1. TEST-FIRE switch at FIRE. Rail SELECTOR switch at LAUNCHER. All other switches at OFF, STOP, CAGE, or EXTERNAL. Cover secured.

(2) On launcher No. 1 (elevator), insure erecting arm down in nonfiring position. Launcher junction box MAIN Switch ON. Hydraulic BYPASS valves closed.

(3) Examine Nike rounds 4, 5, 6, and 7 at Test Stations 5, 6, and 7, and launcher No. 1.

(4) Arming mechanisms read SAFE. Electrical cables connected to test stations. Hydraulic lines disconnected, coupled together, stowed in clip on rail. Minimum air pressure for ready rounds 3,000 psi or within yellow lines. Booster squib *disconnected* from ready round on launcher No. 1.

(5) Report READY FOR WHITE STATUS.

*d. Crewman No. 2.*

(1) Status of launcher operating panel No. 2. TEST-FIRE switch at FIRE. Missile SELECTOR switch at LAUNCHER. All other switches in OFF, STOP, CAGE, or EXTERNAL position. Cover secured.

(2) Status of launcher No. 2 (satellite). Erecting arm down in nonfiring position, hydraulic selector valve at LAUNCHER. Launcher junction box MAIN switch ON. Hydraulic BYPASS valves closed.

(3) Examine Nike rounds 8, 9, and 10 at test stations 2, 3, and 4. Armed mechanisms read SAFE.

(4) Electrical cables connected to test stations.

(5) Hydraulic lines disconnected, coupled together, and stowed in clip on rail.

(6) Minimum air pressure for ready rounds, 3,000 psi or within yellow line.

(7) Report READY FOR WHITE STATUS.

*e. Crewman No. 3.*

(1) Status of launcher operating panel No. 3. TEST-FIRE switch at FIRE. Missile SELECTOR switch at LAUNCHER. All other switches in OFF, STOP, CAGE, or EXTERNAL position. Cover secured.

(2) Status of launcher No. 3 (satellite). Erecting arm down in nonfiring position, hydraulic selector valve at LAUNCHER. Launcher junction box MAIN switch ON. Hydraulic BYPASS valves closed.

(3) Examine Nike rounds 1, 2, and 3 at test stations 9, 10, and 11. Arming mechanisms read SAFE.

(4) Electrical cables connected to test stations.

(5) Hydraulic lines disconnected, coupled together, and stowed in clip on rail.

(6) Minimum air pressure for ready rounds 3,000 psi or within yellow line.

(7) Report READY FOR WHITE STATUS.

*f. Crewman No. 4.*

(1) Status of launcher operating panel No. 4. TEST-FIRE switch at FIRE. Missile SELECTOR switch at LAUNCHER. All other switches in OFF, STOP, CAGE, or EXTERNAL position. Cover secured.

(2) Status of launcher No. 4 (satellite). Erecting arm down in nonfiring position. Launcher junction box MAIN switch ON. Hydraulic BYPASS valves closed.

(3) Examine section frequency converter or engine generator.

(4) Report GENERATOR READY FOR WHITE STATUS.

## 349. White Status (normal off status)

The launching section generators or frequency converters must be turned on to energize the section equipment during white status checks. If a higher status is not imminent after the checks have been completed, the equipment may be returned to the status given in paragraph 348.1. When white status is received, the crew members perform the following duties. If the daily checks have been completed within the past 24 hours, the white status checks may be omitted. Power will be supplied as soon as possible.

*a. Chief of Section.*

(1) *Step W-1.* Remove CREW SAFETY KEYS from board and keep in possession until preparatory activities are completed.

(2) *Step W-2.* Supervise launcher operating

panel checkout of all Nike missiles stored as assembled rounds in the magazines (W-5 to W-16 below).

(3) *Step W-3.* Command WHITE STATUS, PREPARE TO CHECK OUT NIKE ROUNDS.

(4) *Step W-4.* Command CHECK OUT ROUND No. ____.

(5) *Step W-5.* Command CHECK MISSILE BATTERY.

(6) *Step W-6.* Command CHECK GYRO, DESIGNATE LAUNCHER No. ____.

(7) *Step W-7.* Command UNCAGE, CHECK SLEW.

(8) *Step W-8.* Command SLEW GYRO.

(9) *Step W-9.* Command CAGE, CHECK SLEW.

(10) *Step W-10.* Command REPEAT SLEW GYRO.

(11) *Step W-11.* Command CHECK YAW.

(12) *Step W-12.* Command CHECK PITCH.

(13) *Step W-13.* Command CHECK ROLL.

(14) *Step W-14.* Command FINAL CHECK.

(15) *Step W-15.* Command CHECKOUT COMPLETED.

(16) *Step W-16.* Command CHECK NO. _____.

(17) *Step W-17.* Report WHITE STATUS CHECKS COMPLETED to launching control officer.

*b. Panel operator.*

(1) *Step W-1.* White STATUS lamp on.

(2) *Step W-2.* Monitor panel and communication net.

(3) *Step W-3.* Turn POWER switch ON to energize section panel and cabinet. Place INTERCOMM switches ON.

(4) *Step W-4.* Monitor panel.

(5) *Step W-5.* Monitor panel.

(6) *Step W-6.* DESIGNATE specified launcher, report on INTERCOMM, No. ____ ____ DESIGNATED.

(7) *Step W-7.* Monitor panel.

(8) *Step W-8.* Depress SLEW button for 10 seconds. Null meter needle must remain steady. Report over intercomm system NO RESPONSE.

(9) *Step W-9.* Monitor panel.

(10) *Step W-10.* Depress SLEW button for 10 seconds. Null meter needle must oscillate. Report over intercom system NORMAL RESPONSE.

(11) *Step W-11.* Monitor panel.

(12) *Step W-12.* Monitor panel.

(13) *Step W-13.* Monitor panel.

(14) *Step W-14.* Monitor panel.

(15) *Step W-15.* Await command to checkout other Nike rounds.

(16) *Step W-16.* Repeat W-6 through W-15 until all rounds in the magazine have been checked.

*c. Crewman (No. 1, 2, 3, or 4).*

(1) *Step W-1.* Start generator or frequency converter (crewman number 4). Crewmen 1, 2, and 3 go to LOP 1, 2, and 3 respectively.

(2) *Step W-2.* Supply power when ready. Return to LOP No. 4.

(3) *Step W-3.* Open launcher operating panel. Turn TEST-FIRE switch to TEST. Turn Missile SELECTOR switch to proper test station NUMBER. Turn hydraulic selector valve to LOADER. Check electrical cable for tightness. Connect hydraulic lines to test station.

(4) *Step W-4.* Turn LAUNCHER POWER to ON (voltmeter reads 28 to 32 volts). Turn HEATERS AND GYROS to ON (ammeter reads 0 to 5 amperes). Turn VIBRATORS to ON (after 60 seconds, ammeter reads 8 to 10 amperes).

(5) *Step W-5.* Turn EXTERNAL-INTERNAL switch to INTERNAL (after 10 seconds, voltmeter *must* read at least 27 volts). Turn EXTERNAL-INTERNAL switch to EXTERNAL. Report voltmeter reading to section chief.

(6) *Step W-6.* Await command.

(7) *Step W-7.* Turn CAGE-UNCAGE to UNCAGE. Turn MISSILE HYDRAULICS to ON. Hydraulic pressure gage should read approximately 1,900 (±100) psi (2,000±200 psi for combined power pack).

(8) *Step W-8.* Observe ailerons for lack of movement. Report NO RESPONSE.

(9) *Step W-9.* Turn CAGE-UNCAGE to CAGE.

(10) *Step W-10.* Observe ailerons for deflections. Report NORMAL RESPONSE.

(11) *Step W-11.* Press YAW button. Observe yaw fins for deflection. Report CLIMBING RIGHT TURN.

(12) *Step W–12.* Press PITCH button. Observe pitch fins for deflection. Report CLIMBING LEFT TURN.

(13) *Step W–13.* Press ROLL Button. Observe ailerons for deflection. Report CLOCKWISE ROLL.

(14) *Step W–14.* Press YAW, PITCH, and ROLL buttons simultaneously.

Observe fins and ailerons for deflection. Report CLIMB AND CLOCKWISE ROLL.

(15) *Step W–15.* Observe charging lights. Turn all switches to OFF, STOP, CAGE, or EXTERNAL position.

(16) *Step W–16.* Repeat W–3 through W–15 above until all rounds in the magazine have been checked.

(17) *Step W–17.* Standby.

## 350. Yellow Status

***Warning:*** During practice drills all commands will be preceded and followed by the word EXERCISE.

Duties of crew members during yellow alert are shown below.

| *Step* | *Chief of section* | *Panel operator* | *Crewman No. 1* | *Crewman No. 2* | *Crewman No. 3* | *Crewman No. 4* |
|---|---|---|---|---|---|---|
| Y-1 | Command YELLOW STATUS—PREPARE FOR ACTION.<br>Remove CREW SAFETY keys from improvised board.<br>Retain possession of these keys as long as any crew members are preparing aboveground launchers. | When YELLOW STATUS indicator light comes on turn MAIN POWER switch ON and announce over intercomm system YELLOW ALERT. | Report to magazine. | Report to magazine. | Report to magazine. | Start generator or frequency converter. |
| Y-2 | Operate elevator power switch to ON and master control station selector switch to MASTER.<br>Depress DOOR OPEN pushbutton.<br>After doors are fully opened, turn MASTER CONTROL STATION SELECTOR SWITCH to ELEVATOR. | Report over STA 1 (technical hot loop).<br>YELLOW STATUS RECEIVED BY SECTION (*A*, *B*, *C*, *D*).<br>Depress ALARM SHUT OFF pushbutton.<br>Turn all INTERCOMM switches ON.<br>Turn all LAUNCHER POWER switches ON. | Disconnect electric cable from missiles 3, 2, and 1. | Check missiles 3, 2, and 1 for evidence of damage or leaks. | Place two squib testers on elevator next to elevator controls. Remain on elevator and ride to surface. | Proceed to elevator well and wait for first missile to come up.<br>If the generator or converter is already operating, proceed to elevator with crewman No. 3 and ride elevator to surface. |
| Y-3 | CS and 3 mount elevator. CS depresses the elevator UP pushbutton. Remain on elevator. | | | | Ride elevator up. Disconnect electric cable while elevator is going up. | |
| Y-4 | Help roll missile No. 4 to launcher No. 4. When missile and personnel are clear of elevator, depress the elevator DOWN pushbutton. Remain on elevator. | | | | When elevator lowers on bridge locks, depress index pin and roll missile No. 4 to launcher No. 4. | Set squib testers on concrete pad.<br>Assist crewman No. 3 roll missile No. 4 to launcher No. 4. |
| Y-5 | After elevator is lowered, help roll missile No. 3 to elevator. | Depress PREPARED pushbutton for launcher No. 4 when PREPARED report received from surface team. | When elevator lowers on to stops, roll missile No. 3 on to elevator launcher and secure with index pin. Step off elevator. | Assist crewman No. 1 roll missile No. 3 on to elevator. Step off elevator. | Connect electric and hydraulic lines from missile No. 4 to launcher No. 4.<br>Insure arming mechanisms read SAFE on missile No. 4.<br>Report over intercomm system LAUNCHER NO. 4 PREPARED.<br>Go to elevator well and wait for next missile. | Turn rail forward and aft cranks to LOCK at launcher No. 4.<br>Remove cap from launcher squib receptacle.<br>Connect squib tester.<br>Go to elevator well and wait for next missile. |
| Y-6 | When 1 and 2 have stepped off the elevator, depress the UP pushbutton. Remain on the elevator. | | | | When elevator lowers on bridge locks, depress index pins and roll missile No. 3 to launcher No. 3. | Assist crewman No. 3.<br>Roll missile No. 3 to launcher No. 3. |
| Y-7 | Help roll missile No. 3 to launcher No. 3.<br>When missile and personnel have cleared elevator, depress elevator DOWN pushbutton. Remain on elevator. | Depress PREPARED pushbutton for launcher No. 3 when PREPARED report received from surface team. | | | Connect electric and hydraulic lines from missile No. 3 to launcher No. 3.<br>Insure arming mechanisms read SAFE on missile No. 3.<br>Report over intercomm system LAUNCHER NO. 3 PREPARED.<br>Go to elevator and wait for next missile. | Turn rail forward and aft cranks to LOCK at launcher No. 3.<br>Go to elevator and wait for next missile. |

| Step | Chief of section | Panel operator | Crewman No. 1 | Crewman No. 2 | Crewman No. 3 | Crewman No. 4 |
|---|---|---|---|---|---|---|
| Y-8 | After elevator is lowered, help roll missile No. 2 on to elevator. When 1 and 2 have stepped off elevator, depress UP pushbutton. Remain on elevator. | | When elevator lowers on to stops, roll missile No. 2 on to elevator launcher. Secure with index pins. Step off elevator. | Assist crewman No. 1 roll missile No. 2 on elevator. Step off elevator. | | |
| Y-9 | Help roll missile No. 2 to launcher No. 2. When personnel and missile have cleared elevator, depress elevator DOWN pushbutton. Remain on elevator. | | | | When elevator lowers on to bridge locks, depress index pin and roll missile No. 2 to launcher No. 2. | Assist crewman No. 3 roll missile No. 2 to launcher No. 2. |
| Y-10 | After elevator is lowered, help roll missile No. 1 to elevator. Report launcher No. 1 prepared. | Depress PREPARED pushbutton for launchers No. 2 and No. 1 when reported prepared. | When elevator lowers on to stops, roll missile No. 1 on to elevator and secure with index pin. Connect electric and hydraulic lines from missile No. 1 to elevator launcher. Step off elevator. | Assist crewman No. 1 roll missile No. 1 on to elevator. Turn rail forward and aft cranks to LOCK missile No. 1 to elevator launcher. Step off elevator. | Connect electric and hydraulic lines from missile No. 2 to launcher No. 2. Insure arming mechanisms read SAFE on missile No. 2. Report over intercomm system LAUNCHER No. 2 PREPARED. | Turn rail forward and aft cranks to LOCK at launcher No. 2. Remove cap from squib receptacle. Connect squib tester. |
| Y-11 | When 1 and 2 have stepped off elevator, depress elevator UP pushbutton. Remain on elevator. | Insure all ELEVATOR INTERLOCK indicator lights are illuminated after elevator is up. Report over STA 1 (technical hot loop). SECTION (*A*, *B*, *C*, *D*) PREPARED FOR ACTION. | Proceed to storage racks and install third booster fin on missiles 5, 6, 7, 8, 9, and 10. | Insure arming mechanisms read SAFE. Assist crewman No. 1 in fin installation. | | |
| | Remain above ground and await orders. | | Standby in magazine. | Standby in magazine. | Remain above ground and await orders. | Remain above ground and await orders. |

## 351. Blue Status

After the blue status has been entered and a target has been declared hostile by the AAOC or has committed a hostile act, the BCO will command ON DECK. In practice drills, each command after blue alert will be *preceded and followed* by the word EXERCISE. For example, EXERCISE—ON DECK—EXERCISE indicates a practice drill. *DURING PRACTICE DRILL THE BOOSTER SQUIBS WILL NEVER BE CONNECTED.*

| Step | Chief of section | Panel operator | Crewman No. 1 | Crewman No. 2 | Crewman No. 3 | Crewman No. 4 |
|---|---|---|---|---|---|---|
| B-1 | | When BLUE STATUS indicator light comes on, announce over the intercomm system BLUE STATUS. When the ON DECK command is received, announce over intercomm system ON DECK. | Turn MASTER CONTROL STATION SELECTOR switch to CONSOLE. | STANDBY. | Go to rear of launcher No. 2 | Go to rear of launcher No. 4. |
| B-2 | Remove forward yoke support and air regulator pins from missiles 1, 2, 3, and 4. Supervise squib tests. | | Close magazine vent system. Return to personnel room. | Return to personnel room. Secure doors in passageway enroute. | Complete launcher continuity, ac, and dc checks, on launcher No. 2. If satisfactory, remove shorting plug and connect booster squib at launcher No. 2. ***Caution:*** NEVER CONNECT THE BOOSTER SQUIB DURING PRACTICE DRILLS. | Complete ac and dc checks on launcher No. 4. If satisfactory, remove shorting plug and connect booster squib at launcher No. 4. ***Caution:*** NEVER CONNECT THE BOOSTER SQUIB DURING PRACTICE DRILLS. |

| | | | | | | |
|---|---|---|---|---|---|---|
| B-3 | | | | | Go to launcher No. 1, connect squib tester, and complete ~~launcher continuity, ac, and~~ dc checks. If satisfactory, remove shorting plug and connect the booster squib. ***Caution:*** NEVER CONNECT THE BOOSTER SQUIB DURING PRACTICE DRILLS. Close magazine hatch. | Go to launcher No. 3, connect squib tester, and complete ~~launcher continuity, ac, and~~ dc checks. If satisfactory, remove shorting plug and connect the booster squib ***Caution:*** NEVER CONNECT THE BOOSTER SQUIB DURING PRACTICE DRILLS. Assist No. 3 in closing magazine hatch. |
| B-4 | When all safety pins (with streamers) have been removed and booster squibs connected, report over the intercom system LAUNCHERS (*1, 2, 3, 4*) READY. | When LAUNCHER READY report is received, place LAUNCHER ELEVATION switch to UP. After all launchers are elevated, turn all INTERCOMM switches OFF. | | | | |
| B-5 | Hang 4 yoke support and 4 air regulator pins on improvised board. Insure all booster shorting plugs (4) are on improvised board. | Turn HEATERS AND GYROS ON for launcher No. 1. Record starting time. | Standby in personnel room. | Standby in personnel room. | Return to personnel room down hatchway ladder or stairway. Carry squib tester and two booster shorting plugs. Hang both booster shorting plugs on improvised board. Standby in personnel room. | Return to personnel room down hatchway ladder or stairway. Carry squib tester and two booster shorting plugs. Close hatchway cover. Hang both booster shorting plugs on improvised board. Standby in personnel room. |
| B-6 | After all crewmen have returned to personnel room, and all yoke support pins, air regulator pins, and booster shorting plugs are on improvised board, insert CREW SAFETY KEYS and turn each key to FIRE. | After launcher READY indicator light illuminates, designate launcher No. 1, and place SECTION READY TO FIRE—NOT READY switch to SECTION READY TO FIRE (up) position. Report over STA 1 SECTION (*A, B, C, D*) READY TO ENGAGE. If ON DECK status exceeds 10 minutes, alternate between launchers No. 1 and 4 for heaters AND GYROS ON and DESIGNATE. Record starting and stopping times. If ON DECK status terminates, turn HEATERS AND GYROS OFF, record stopping time. | | | | |

## 352. Red Status

***Warning:*** During practice drills all commands will be preceded and followed by the word EXERCISE.

Duties of crew members in red alert are shown below.

| *Step* | *Chief of section* | *Panel operator* | *Crewman No. 1* | *Crewman No. 2* | *Crewman No. 3* | *Crewman No. 4* |
|---|---|---|---|---|---|---|
| R-1 | Put on STA 2 headset and monitor tech hot loop. | When RED status indicator light illuminates, announce RED STATUS—ENGAGEMENT—LAUNCHING. | STANDBY. | STANDBY. | STANDBY. | STANDBY. |

| Step | Chief of section | Panel operator | Crewman No. 1 | Crewman No. 2 | Crewman No. 3 | Crewman No. 4 |
|---|---|---|---|---|---|---|
| R-2 | Monitor panel and hop loop. Be prepared to use emergency firing procedure if required. | Monitor command hot loop and SELECTED indicator light.<br>When SELECTED green indicator light comes on, turn HEATERS AND GYROS ON for next missile to be fired (normally No. 4). A selected section should have heaters and gyros on for two missiles. Record starting time.<br>Turn HYDRAULICS ON for missile No. 1.<br>Set gyro azimuth dial to gyro azimuth as reported by computer operator from battery control trailer.<br>Monitor null meter. Should fluctuate about center position. | | | | |
| R-3 | Monitor MISSILE REJECT, FIRE, LAUNCH ORDER, and MISSILE AWAY indicator lights.<br>When red REJECT or green MISSILE AWAY indicator light comes on, command RELOAD LAUNCHER No. 1. | Designate launcher No. 4 if missile READY TO FIRE indicator light is ON. If missile No. 4 is not ready, designate launcher No. 2 or 3. TURN HYDRAULICS ON for missile No. 4. | | | | |
| R-4 | Proceed to magazine room with crewmen. | Turn LAUNCHER ELEVATION switch to DOWN to lower elevator and erecting arm.<br>Turn LAUNCHER POWER and HYDRAULICS to OFF for launcher No. 1.<br>Turn launcher No. 1 INTERCOMM switch to ON. | Proceed to magazine. | Proceed to magazine. | Proceed to magazine. | Proceed to magazine. |
| R-5 | When elevator is down, announce over intercomm system LAUNCHER No. 1 DOWN.<br>Supervise reloading of launcher No. 1. | R-5 Turn Hydraulics Heater and gyro off — launcher power on ?? | Disconnect electric cable from missile No. 5 (on racks).<br>Complete installation of third booster fin if not done previously. | | Disconnect electric and hydraulic lines from launcher No. 1 (elevator).<br>Roll used rail to storage racks.<br>Turn rail forward crank to LOCK on used rail. | Release crank-operated locks on launcher No. 1.<br>Assist crewman No. 3 to roll used rail to storage rack. |
| R-6 | Help roll missile to elevator. | | Roll missile No. 5 to launcher No. 1 (elevator). Remove yoke support and air regulator pins. | Assist crewman No. 1 roll missile No. 5 to elevator. Connect squib tester to launcher receptacle.<br>Complete launcher continuity, ac, and dc checks. If satisfactory, remove shorting plug and connect booster squib. Report to CS RELOADED. | Turn forward rail crank on launcher No. 1 to LOCK. | Turn aft rail crank on launcher No. 1 to LOCK. |

This method would stop the Elev from coming down.

| | | | | | | |
|---|---|---|---|---|---|---|
| R-7 | Announce over intercomm system LAUNCHER RELOADED.<br>Order crewmen to return to personnel room.<br>Return to personnel room. | When launcher reported as reloaded:<br>Turn launcher No. 1 LAUNCHER POWER ~~and HYDRAULICS to ON~~.<br>Depress PREPARED pushbutton.<br>Turn HEATERS AND GYROS ON.<br>~~Turn~~ Hydraulics<br>Announce over intercomm system CLEAR ELEVATOR.<br>Turn LAUNCHER No. 1 LAUNCHER ELEVATION switch to UP (to raise elevator and erect missile).<br>Turn launcher No. 1 intercomm switch OFF. | Return to personnel room and hang pins on improvised board. | Return to personnel room and hang booster shorting plug on improvised board. | Return to personnel room. | Return to personnel room. |
| R-8 | Repeat steps R-1 through R-7 to complete engagement. | Repeat steps R-1 through R-7 required to complete engagement. | Repeat steps R-1 through R-7 required to complete engagement. | Repeat steps R-1 through R-7 as required to complete engagement. | Repeat steps R-1 through R-7 as required to complete engagement. | Repeat steps R-1 through R-7 as required to complete engagement. |

(This is to keep from blowing O-rings

## 353. Section Reload (Red to Blue Status)

The aboveground (satellite) launchers will be reloaded only during a lull in the engagement. *At no time will any personnel be allowed aboveground during an angagement.* Duties of crew members during reloading are shown below.

| *Step* | *Chief of section* | *Panel operator* | *Crewman No. 1* | *Crewman No. 2* | *Crewman No. 3* | *Crewman No. 4* |
|---|---|---|---|---|---|---|
| RB-1 | Command RELOAD LAUNCHERS when directed to do so by launching control officer. | When STATUS indicator light changes from red to blue, turn HEATERS AND GYROS and HYDRAULICS to OFF for all missiles. | Go to elevator MASTER CONTROL STATION and turn station selector switch to ELEVATOR. | Open magazine vent system. | Obtain squib tester.<br>Proceed up escape ladder (or stairway) to satellite launchers. Set squib tester near launcher No. 4.<br>Open magazine hatch. | Obtain squib tester.<br>Proceed up escape ladder (or stairway) to satellite launchers. Set squib tester near launcher No. 3.<br>Assist crewman No. 3 in opening magzaine hatch. |
| RB-2 | Proceed up escape ladder to satellite launchers. | Turn all INTERCOM switches ON, DESIGNATE switch to NONE, SECTION READY to FIRE—NOT READY to NOT READY, and all LAUNCHER ELAVATION switches to DOWN.<br>Turn LAUNCHER ELEVATION switches to OFF after each erecting arm is down. | | | | |
| RB-3 | | Relay all commands to crewmen via intercomm system. | Disconnect electric cables from ready rounds in magazine. | Assist crewman No. 1. | Disconnect squib line remnant from launchers Nos. 1 and 2. | Disconnect squib line remant from launchers Nos. 3 and 4. |
| RB-4 | Help roll next missile from elevator launcher to loading racks | | Roll next missile to be loaded onto elevator next to pit. | Assist crewman No. 1 roll missile. | Disconnect electric and hydraulic lines from missile on elevator. | Turn rail foward and aft cranks to UNLOCK on elevator launcher. |
| RB-5 | When missile and personnel have cleard elevator, depress DOWN pushbutton. Remain on elevator. | | | | Depress index pin and roll missile from elevator to launcher to be reloaded. | Assist crewman No. 3 roll missile from elevator to launcher to be reloaded. |

| Step | Chief of section | Panel operator | Crewman No. 1 | Crewman No. 2 | Crewman No. 3 | Crewman No. 4 |
|---|---|---|---|---|---|---|
| RB-6 | Help roll next missile from storage racks to elevator. | | When elevator lowers on to stops, roll missile on to elevator. | Assist crewman No. 1 roll missile on to elevator. | Disconnect electric and hydraulic lines between launcher to be reloaded and used rail on erecting arm. Depress index pin and roll used rail to outside of launcher. | Turn rail forward and aft cranks to UNLOCK on launcher to be reloaded. Assist crewman No. 3 in rolling used rail off of launcher. |
| RB-7 | When 1 and 2 have stepped off the elevator, depress the UP pushbutton. Remain on elevator. Help 3 and 4 as required. | | | | If launcher No. 4 has been fired, position missile from launcher No. 3 onto launcher No. 4. If launchers Nos. 3 and 4 have both been fired, roll used rail from launcher No. 3 to outside of launcher No. 4. | Assist crewman No. 3. |
| RB-8 | Repeat steps Y-4 through 11 as required to complete the reloading of launchers. | Repeat steps Y-4 through 11 as required to complete reloading of launchers. | Repeat steps Y-4 through 11 as required to complete reloading of launchers. | Repeat steps Y-4 through 11 as required to complete reloading of launchers. | Repeat steps Y-4 through 11 as required to complete reloading of luanchers. | Repeat steps Y-4 through 11 as required to complete reloading of launchers. |

## 354. Stand Down (Red or Blue to Yellow Status)

Duties of crew members in going from red or blue status to yellow status are shown below.

| Step | Chief of section | Panel operator | Crewman No. 1 | Crewman No. 2 | Crewman No. 3 | Crewman No. 4 |
|---|---|---|---|---|---|---|
| BY-1 | | When STATUS indicator light changes from red or blue to yellow, announce STAND DOWN RED (BLUE) STATUS TO YELLOW STATUS. Turn HEATERS AND GYROS and HYDRAULICS to OFF for all launchers except launcher No. 1. Record stopping time. | Standby in personnel room. | Standby in personnel room. | Standby in personnel room. | Standby in personnel room. |
| BY-2 | Turn all CREW SAFETY keys OFF, remove, and keep in possession. | When section is no longer ON DECK, announce OFF DECK, and turn HEATERS AND GYROS and HYDRAULICS to OFF for launcher No. 1. Record stopping time. | | | | |
| BY-3 | Command STAND DOWN TO YELLOW STATUS. Remove booster shorting plug, yoke support, and air regulator pins from improvised board and hand those for missiles Nos. 1 and 2 to crewman No. 3 and missiles Nos. 3 and 4 to crewman No. 4. | Turn all INTERCOMM switches to ON, DESIGNATE to NONE, SECTION READY TO FIRE—NOT READY to NOT READY, and LAUNCHER ELEVATION to DOWN for launchers 2, 3, and 4. | | | Take yoke support and air regulator pins and booster shorting plug for missiles Nos. 1 and 2 from CS. | Take yoke support and air regulator pins and booster shorting plug for missiles Nos. 3 and 4 from CS. |
| BY-4 | Proceed up hatchway stairs or ladder to satellite launchers. | | Go to magazine. | Go to magazine. | Proceed up hatchway stairs or ladder to launchers. | Proceed up hatchway stairs or ladder to launchers. |
| BY-5 | Supervise disconnecting booster squibs by crewmen Nos. 3 and 4. | | Turn elevator master control selector switch to ELEVATOR. Report over INTERCOMM system MASTER CONTROL TO ELEVATOR. | Open magazine vent system. | Open magazine hatch. Disconnect booster squib and connect booster shorting plug at launchers Nos. 1 and 2. | Assist crewman No. 3 to open magazine hatch. Disconnect booster squib and connect booster shorting plug at launchers Nos. 3 and 4. |

| | | | | | | |
|---|---|---|---|---|---|---|
| BY-6 | Supervise replacement of yoke support and air regulator pins at launchers Nos. 1, 2, 3, and 4. | When report master control to elevator is received, turn LAUNCHER NO. ELEVATION switch to DOWN. | Remove third booster fin from ready missiles in magazines. | Assist crewman No. 1 in removing third booster fin ~~from ready missiles in mag-~~ azine. | Replace yoke support and air regulator pins at launchers Nos. 1 and 2. | Replace yoke support and air regulator pins at launchers Nos. 3 and 4. |
| BY-7 | Report on intercomm system ALL ROUNDS SAFE. | | | | | |
| BY-8 | Remain above ground and await orders. | Report over STA 1 SECTION (*A*, *B*, *C*, *D*) STAND DOWN TO YELLOW STATUS COMPLETED. | Remain in magazine and await orders. | Remain in magazine and await orders. | Remain above ground and await orders. | Remain above ground and await orders. |

## 355. Replace Equipment (Yellow to White)

Duties of crew members in going from yellow to white status are shown below.

| *Step* | *Chief of section* | *Panel operator* | *Crewman No. 1* | *Crewman No. 2* | *Crewman No. 3* | *Crewman No. 4* |
|---|---|---|---|---|---|---|
| YW-1 | | When STATUS indicator light changes from yellow to white, announce over intercomm system REPLACE EQUIPMENT—YELLOW TO WHITE STATUS. | | | | |
| YW-2 | Command REPLACE EQUIPMENT. Depress elevator DOWN pushbutton. Remain on elevator. | Depress NOT PREPARED pushbutton for all launchers. | | | | |
| YW-3 | Help roll missile from elevator launcher to storage racks. *Note.* The order of returning ready missiles to the storage racks may be varied to equalize the guidance section running time. The missile on launcher No. 1 will normally accumulate the largest total running time. | Notify launching control officer over TECH hot loop (STA 1) of progress of unloading operations. | When elevator lowers to on stops, disconnect electric and hydraulic lines, depress index pin, and roll missile to designated place on storage racks. | Turn rail forward and aft cranks to UNLOCK. Assist crewman No. 1 in rolling missile to storage racks. | Disconnect electric and hydraulic lines at launcher No. 3. | Turn rail forward and aft cranks to UNLOCK, at launcher No. 3. |
| YW-4 | When missile and personnel are clear of elevator, depress the UP pushbutton. Remain on elevator. | | Connect electric cable of missile to test station on storage rack. Connect hydraulic lines together and store in clip on rail. | | | |
| YW-5 | Help roll round from satellite launcher to elevator. | | | | When elevator lowers onto bridge locks, depress the index pin and roll missile from launcher No. 3 to elevator. Step off elevator. | Assist crewman No. 3 in rolling missile from launcher No. 3 to elevator. Step off elevator. |
| YW-6 | After crewmen 3 and 4 have stepped off elevator, depress DOWN pushbutton. Remain on elevator. | | | | Disconnect electric and hydraulic lines at launcher No. 2. | Turn rail forward and aft cranks to UNLOCK at launcher No. 2. |

| *Step* | *Chief of section* | *Panel operator* | *Crewman No. 1* | *Crewman No. 2* | *Crewman No. 3* | *Crewman No. 4* |
|---|---|---|---|---|---|---|
| YW-7 | Help roll missile from elevator to storage racks. | | After elevator has lowered on to stops, depress index pin and roll missile to storage racks. | Assist crewman No. 1 in rolling missile to storage racks. | | |
| YW-8 | After crewmen 1 and 2 have stepped off elevator, depress UP pushbutton. Remain on elevator. | | Connect electric cable of missile to test station on storage rack. Connect hydraulic lines together and store in clip. | | | |
| YW-9 | Help roll missile from satellite launcher to elevator. | | | | Depress index pin and roll missile from launcher to elevator. | Assist crewman No. 3 roll missile from launcher to elevator. |
| YW-10 | After crewmen 3 and 4 have stepped off elevator, depress DOWN pushbutton. Remain on elevator. | | | | Disconnect electric and hydraulic lines at launcher No. 4. | Turn rail forward and aft cranks to UNLOCK, at launcher No. 4. |
| YW-11 | Help roll missile from elevator to storage racks. | | After elevator has lowered on to stops, depress index pin and roll missile to storage racks. | Assist crewman No. 1 roll missile to storage racks. | | |
| YW-12 | After crewmen 1 and 2 have stepped off elevator, depress UP pushbutton. Remain on elevator. | | Connect electric cable of missile to test station. Connect hydraulic lines together and store in clip. | | | |
| YW-13 | Help roll missile from launcher to elevator. | | | | When elevator lowers on to stop, depress index pin and roll missile from launcher No. 4 on to elevator. Return to magazine. | Assist crewman No. 3 roll missile from launcher to elevator. Return to magazine. |
| YW-14 | After crewmen 3 and 4 have stepped off elevator, depress DOWN pushbutton. Remain on elevator. | | Check status of LOP No. 1. | | Check status of LOP No. 3. | Assist crewman No. 3. |
| YW-15 | Turn master control station selector switch to MASTER. Close elevator doors. | Report over STA 1 (TECH HOT LOOP) SECTION (*A*, *B*, *C*, *D*) UNLOADED AND ALL EQUIPMENT REPLACED. | Check status of LOP No. 1 after elevator has lowered on to stops. Check status of launcher No. 1. Examine rounds 1, 5, 6, and 7. | Check rounds 8, 9, and 10. | Examine rounds 2, 3, and 4. | Assist as required. |

## Section II. ABOVEGROUND LAUNCHING SECTIONS

### 356. Fall In

The chief of section takes his post in front of and facing away from the section revetment. He commands FALL IN. The section forms in a single rank at close interval, centered on, facing, and three paces from the chief of section. The members of the section from right to left in the rank are as follows: senior launcher crewman, crewman No. 2, launcher crewman, crewman No. 4, generator operator, crewman No. 6, and launcher section panel operator.

### 357. Call Off

The section being in formation, the chief of section commands CALL OFF. All personnel in the rank except the senior launcher crewman execute eyes right and then in sequence calls off his designation given above. As each man calls out his designation, he turns his head and eyes smartly to the front.

### 358. Posts

The section being in formation, the chief of section commands POSTS. Members of the section move at the double to their individual duty stations as follows:

Senior launcher crewman—Rear of launcher No. 1, carrying squib tester with him.

Crewman No. 2—Launcher operating panel (LOP) of launcher No. 1.

Launcher crewman—Rear of launcher No. 2, carrying squib tester with him.

Crewman No. 4—LOP of launcher No. 2.

Generator operator—Rear of launcher No. 3, carrying a booster squib tester with him.

Crewman No. 6—LOP of launcher No. 3.

Launcher section panel operator—Seated in front of the launching section panel.

Crewman No. 7—Rear of launcher No. 4, carrying squib tester with him.

Crewman No. 8—LOP of launcher No. 4.

*Note.* Team 4 will be required when 4 launchers are used per section. The duties of teams 2, 3, and 4 will be the same as for team 1, except the team will be responsible for launchers Nos. 2, 3, and 4, whereas team 1 will be responsible for launcher No. 1.

### 359. Report

All members of the section being present at their assigned posts, the chief of section directs the panel operator to REPORT THE SECTION ALL PRESENT. The launching section panel operator makes this report to the launching control officer over telephone station No. 1 line (Tech hot loop).

### 360. Fall Out

When it is desired to give the platoon a rest or to relieve them temporarily from a post, the command FALL OUT is given. The command infers that personnel are to remain in the immediate vicinity. This command in the launching area will be given only after approval from the battery control officer.

### 361. Examine Equipment and White Status

The duties of the personnel in examine equipment and white status are the same as those for an underground type section (except all equipment is aboveground) excluding all elevator checks.

## 362. Yellow Status

***Warning:*** During practice drills all commands will be preceded and followed by the word EXERCISE.

Duties of crew members during yellow alert are listed below.

| *Step* | *Chief of section* | *Panel operator* | *Senior launcher crewman* | *Crewman No. 2* |
|---|---|---|---|---|
| Y-1 | Command YELLOW STATUS PREPARE FOR ACTION. Remove all CREW SAFETY keys. Retain possession of keys at all times the launchers are being manned by the crews. | When yellow STATUS indicator light comes on turn main POWER switch ON and announce on the intercomm system, YELLOW STATUS. | Obtain squib tester. Go to rear of launcher No. 1. Set squib tester at rear of launcher. | Go to front of launcher No. 1. *Note.* Generator operator, team No. 3, will start generator or frequency converter if not already running before going to launcher No. 3. |
| Y-2 | | Report over STA 1 (tech hot loop) YELLOW STATUS RECEIVED BY SECTION (*A*, *B*, *C*, *D*). Depress ALARM SHUTOFF pushbutton. Turn all INTERCOMM and LAUNCHER POWER switches ON. | Uncover missile. | Assist in uncovering missile. Check missile for evidence of damage or leaks. |
| Y-3 | | Depress appropriate PREPARED pushbutton when prepared reports received from teams. | Report LAUNCHER No. (*1*, *2*, *3*, *4*) PREPARED. Stand by for further orders. | Insure arming mechanisms read SAFE. Stand by for further orders. |

## 363. Blue Status

***Warning:*** During practice drills all commands will be preceded and followed by the word EXERCISE.

After the blue status is entered, and a target is declared hostile by the AAOC, or commits a hostile act, the BCO commands ON DECK. During practice drills, each command after ON DECK will be preceded and followed by the word EXERCISE. For example, EXERCISE—ON DECK—EXERCISE indicates a practice drill. *DURING PRACTICE DRILLS, THE BOOSTER SQUIB WILL NEVER BE CONNECTED.* Duties of crew members during blue status are shown below.

| *Step* | *Chief of section* | *Panel operator* | *Senior launcher crewman* | *Crewman No. 2* |
|---|---|---|---|---|
| B-1 | Supervise squib tests. | Monitor panel lights. When blue STATUS indicator light comes on, announce over intercomm system BLUE STATUS. When ON DECK command is received, announce ON DECK over intercomm. | Complete launcher continuity, ac, and dc checks. If satisfactory, connect squib. ***Warning:*** DO NOT CONNECT BOOSTER SQUIB DURING PRACTICE DRILLS. | Report the yoke support and air regulator safety pins, return to revetment and hand safety pins on improvised board. |

| | | | | |
|---|---|---|---|---|
| B-2 | | Place LAUNCHER ELEVATION switch to UP for the appropriate launcher when requested. Turn HEATERS AND GYROS to ON for launcher to be designated. Record starting time. After each launcher is elevated, turn LAUNCHER ELEVATION switch to OFF. | Command ELEVATE LAUNCHER No. (*1, 2, 3, 4*). Return to revetment. Hang booster shorting plug on improvised board. | Stand by in section revetment. |
| | Return to section revetment. | After all are elevated, turn all INTERCOMM switches to OFF. | | |
| B-3 | When all personnel and safety pins (three per launcher) are accounted for in the section revetment, insert CREW SAFETY KEYS and turn to FIRE. | After launcher READY indicator light comes on, turn the launcher designate switch to the first launcher to fire, depress the Launcher DESIG pushbutton, and place the READY TO FIRE—NOT READY switch to READY TO FIRE (up) position. This will be the launcher with heaters and gyros on. Report over STA 1 (tech hot loop) SECTION (*A, B, C, D*) READY TO ENGAGE. If on deck status exceeds 10 minutes, alternate 10 minutes on and 10 minutes off between 2 launchers for HEATERS AND GYROS ON and DESIGNATE. Record starting and stopping time. | Stand by in section revetment. | Stand by in section revetment. |

## 364. Red Status

***Warning:*** During practice drills all commands will be preceded and followed by the word EXERCISE.

Duties of personnel during red status are shown below.

| *Step* | *Chief of section* | *Panel operator* | *Senior launcher crewman* | *Crewman No. 2* |
|---|---|---|---|---|
| R-1 | Put on Sta 2 headset and monitor tech hot loop. | When red STATUS indicator light comes on, announce RED STATUS LAUNCHING. | Stand by in section revetment. | Stand by in section revetment. |
| R-2 | Monitor panel and tech hot loop. | When SELECTED indicator green light comes on, turn HEATERS AND GYROS ON for second missile. Record starting time. A selected section should have HEATERS AND GYROS ON for 2 missiles at all times. Turn HYDRAULICS ON for designated round. | | |
| | | Monitor null meter. Should fluctuate about center position. | | |

| Step | Chief of section | Panel operator | Senior launcher crewman | Crewman No. 1 |
|---|---|---|---|---|
| R-3 | Be ready to use emergency procedures if required. | Monitor MISSILE REJECT, FIRE, LAUNCH ORDER, and MISSILE AWAY indicator lights. When red REJECT or green MISSILE AWAY indicator light comes on, designate next missile to be fired (this will be the missile with the HEATERS AND GYROS ON). Turn HYDRAULICS ON for designated missile. Turn HEATERS AND GYROS ON for another missile. Record starting time. Turn HEATERS AND GYROS and HYDRAULICS OFF for fired or rejected round.<br>Turn LAUNCHER ELEVATION switch to DOWN for fired or rejected missile. When launcher erecting arm is down, turn switch to OFF. | | |
| R-4 | Repeat steps R-2 and R-3 as required to complete engagement. | Repeat steps R-2 and R-3 as required to complete engagement. | Standby in section revetment. | Standby in section revetment. |
| R-5 | When last round has been fired or rejected, command PREPARE TO RELOAD.<br>Remove CREW SAFETY KEYS. Keep in possession while crews are at the launchers. | Turn DESIGNATE switch to NONE, all HEATERS AND GYROS and HYDRAULICS OFF, LAUNCHER ELEVATION DOWN, and INTERCOMM switches to ON. When each launcher is down, turn LAUNCHER ELEVATION switch to OFF. | | |
| R-6 | When SELECTED indicator light changes from green to amber, command POSTS.<br>Go to launcher area and supervise reloading. | Man STA 1. | Obtain squib tester, and go to rear of launcher No. 1. Set squib test at rear of launcher.<br>Remove squib line remnant. Examine receptacle.<br>Turn rail rear crank to UNLOCK on used rail. Go to missile to be reloaded.<br>Turn rail rear crank to UNLOCK for missile to be loaded onto launcher. | Go to front of missile to be reloaded, turn rail front crank to UNLOCK and disconnect hydraulic and electric cables.<br>Go to launcher to be reloaded.<br>Turn rail front crank to UNLOCK, and disconnect hydraulic and electric connections from used rail. |

| | | | | |
|---|---|---|---|---|
| R-7 | Assist in rolling missiles. | | Roll new missile onto launcher erecting arm. Turn rail rear crank to LOCK. Connect hydraulics and electric lines. | Push old rail off launcher until it hits a stop on the storage racks. Raise stop on storage rack nearest launcher. Turn rail front crank to LOCK. Go to launcher being reloaded. Turn rail front crank to LOCK on new missile on launcher. |
| R-8 | Prepare missile to fire by completing steps B-1 through B-3 above. | Repeat steps B-1, B-2, and B-3. | Repeat steps B-1, B-2, and B-3. | Repeat steps B-1, B-2, and B-3. |
| R-9 | Repeat steps R-1 through R-8 as required to complete engagement. | Repeat steps R-1 through R-8 to complete engagement. | Repeat steps R-1 through R-8 to complete engagement. | Repeat steps R-1 through R-8 to complete engagement. |

## 365. Stand Down (Red or Blue to Yellow)

Duties of crew members in going from red or blue status to yellow status are shown below.

| *Step* | *Chief of section* | *Panel operator* | *Senior launcher crewman* | *Crewman No. 2* |
|---|---|---|---|---|
| RB-1 or BY-1 | | When STATUS indicator light changes from red or blue to yellow, announce STAND DOWN—RED (BLUE) STATUS TO YELLOW STATUS. Turn HEATERS AND GYROS and HYDRAULICS OFF for all except 1 missile. Record stopping time. | Standby in revetment. | Standby in revetment. |
| BY-2 | Turn all CREW SAFETY keys OFF, remove, and keep in possession. | When section is no longer ON DECK, announce OFF DECK, and turn HEATERS AND GYROS and HYDRAULICS to OFF for remaining missile. Record stopping time. | | |
| BY-3 | Command STAND DOWN to YELLOW STATUS. Remove booster shorting plug and yoke support and air regulator pins from improvised board. Hand booster shorting plug to crewman No. 1 and yoke support and air regulator pins to crewman No. 2. Go to launcher area. | Turn all INTERCOMM switches ON, DESIGNATE to NONE, SECTION READY TO FIRE—NOT READY to NOT READY, and LAUNCHER ELEVATION to DOWN. After launchers are down, turn LAUNCHER ELEVATION switches to OFF. | Take booster shorting plug from CS. Go to rear of launcher No. 1. | Take yoke support pin and air regulator pin from CS. Go to front of missile No. 1. |
| BY-4 | Supervise disconnecting booster squib. | | Disconnect booster squib and install booster shorting plug. | Install yoke support pin and air regulator pin. |
| BY-5 | Report over intercomm system ALL ROUNDS SAFE. Standby. | | Standby. | Standby. |

## 366. Replace Equipment (Yellow to White)

Duties of crew members in going from yellow to white status are shown below.

| *Step* | *Chief of section* | *Panel operator* | *Senior launcher crewman* | *Crewman No. 2* |
|---|---|---|---|---|
| YW-1 | | When STATUS indicator light changes from yellow to white, announce over intercomm system REPLACE EQUIPMENT-YELLOW TO WHITE STATUS. | | |
| YW-2 | Command REPLACE EQUIPMENT. Supervise crewmen. | Depress NOT PREPARED pushbutton, for all launchers. | Replace cover on missile. Check LOP. | Assist crewman No. 1 in replacing boot and covering missile. |
| YW-3 | Report ALL SECURE over intercomm system. | Report over tech hot loop SECTION (*A*, *B*, *D*, *C*) ALL SECURE. | Standby. | Standby. |

# CHAPTER 15

# EMERGENCY FIRING PROCEDURE

## 367. Use

The firing procedure given in chapters 12, 13, and 14 assumes that the launching control trailer and the entire Nike I cable system are being used. This is the normal firing procedure. However, the length of the interarea cable runs (runs 46, 47, and 48) makes them particularly susceptible to damage. In certain tactical situations it may be necessary to operate temporarily without the interarea cables or the launching control trailer. The Nike I system can engage targets without the use of the cable runs between the battery and launching control trailers or the cable run between the launching control trailer and each of the launching sections by using the emergency firing procedure. Due to local conditions, such as communications available, no one procedure will apply to all defense areas. The emergency firing procedure given in this chapter should be used as a guide to formulate local SOPs.

## 368. Emergency Firing Procedure

In the normal firing procedure, the required interarea communications are carried over the cable-carried net. When the emergency firing procedures are used, the information normally carried over the cable-carried net is relayed verbally over the field-wire or radio net. The missile-tracking radar operator remains on the technical hot loop except when he must report to the battery control officer. This chapter specifies when action different from the normal firing procedure is required by the operators. Included are the data lost when each cable run is not usable, the major indications of cable loss, and the actions required to successfully complete the engagement. Only the major indications of cable loss are given. Well-trained operators will recognize others. All operators must be thoroughly trained to immediately recognize the indications of cable losses and to effectively implement the required emergency procedure.

## 369. Interarea Cable Run 46, BCT to LCT

*a. Data Carried.*

(1) Gyro azimuth.

(2) Gyro reference.

(3) Number of missiles prepared.

*b. Loss Indication.*

(1) Number-of-missiles-prepared meter in the battery control trailer drops from some reading to zero.

(2) Number-of-missiles-prepared meters in the launching control trailer drop from some reading to zero.

## 370. Interarea Cable Run 47, BCT to LCT

*a. Data Carried.*

(1) Command hot loop.

(2) Technical hot loop.

(3) Missile-ready and common ground.

(4) Missile-reject and fire order signals.

(5) White, yellow, and blue alert statuses.

(6) Administration telephone circuit (phantom).

*b. Loss Indications.*

(1) Command and technical hot loops, cable-carried net, inoperative.

(2) Missile-ready indicator light at battery control trailer changes from green to amber.

(3) Premature red alert status at the launching control trailer.

## 371. Interarea Cable Run 48, BCT to LCT

*a. Data Carried.*

(1) Section selected.

(2) Launcher designated.

*b. Loss Indications.*

(1) Section SELECTED and launcher DESIGNATED indicator lights unexplainably change from green to amber in the radar control trailer.

(2) Launcher DESIGNATED indicator light in the battery control trailer unexplainably changes from green to amber.

## 372. Action, Interarea Cables Out

STEP 1. The battery control officer commands EMERGENCY PROCEDURE.

STEP 2. The battery control switchboard operator contacts launching control trailer switchboard operator (over the administrative wire line) and directs USE WIRE NET, (*current*) STATUS.

Both switchboard operators switch the CABLE-WIRE-RADIO switch to WIRE. If the field-wire net is out, establish contact by radio.

The computer operator and battery control officer report over the hot loops EMERGENCY PROCEDURE.

Each launching section control panel operator opens the MANUAL ORDERS access door, and positions the GYRO PRESET toggle switch from AUTO to MANUAL (up).

If the current status is white, the launching control trailer panel operator depresses the ALERT ALARM SHUTOFF pushbutton, opens the MANUAL ORDERS access door, and turns the ALERT SELECTOR switch to WHITE. During the continuation of the white status it will be necessary to continuously monitor the administrative wire net at the launching control trailer to receive subsequent status changes from the battery control trailer switchboard operator.

When the status is other than white, the battery control officer commands over the command hot loop (YELLOW), (BLUE), or (RED) STATUS. The computer operator repeats the command over the technical hot loop.

The launching control trailer panel operator positions the ALERT SELECTOR switch for each status change. When all personnel are present, he depresses the alarm SHUTOFF push button.

The missile-tracking radar operator positions the LOCAL DESIGNATE toggle switch to the LOCAL DESIGNATE (up) position.

STEP 3. The launching control officer in the launching control trailer advises the computer operator the total number of missiles prepared for each section. Computer operator advises the battery control officer of the number prepared and any subsequent change thereto. Battery control officer and computer operator report each change of status over the hot loops.

STEP 4. After the MISSILE TRACKED and TARGET TRACKED indicator lights on the battery control console in the battery control trailer change from amber to green, the computer operator reads the gyro azimuth over the technical hot loop as indicated on the GYRO AZIMUTH dial on the battery control console. Continue reporting each 50-mil change in gyro azimuth until the battery control officer commands fire.

The launching section control panel operator at the selected section turns the knob located beneath the GYRO PRESET dial until the reading on the GYRO PRESET meter is the same as that read by the computer operator. Continue until the battery control officer commands fire.

STEP 5. When the launching control panel operator in the launching control trailer has selected the section, the launching control officer reports over the technical hot loop SECTION (*A*, *B*, *C*, *D*) SELECTED. The missile-tracking radar operator in the radar control trailer depresses the corresponding SECTION

pushbutton and reports over the technical hot loop SECTION (*A*, *B*, *C*, *D*) SELECTED.

STEP 6. When the launching section panel operator has designated a launcher, the launching control officer reports over the technical hot loop SECTION (*A*, *B*, *C*, *D*) LAUNCHER (*1*, *2*, *3*, *4*) DESIGNATED.

The missile-tracking radar operator in the radar control trailer depresses the corresponding LAUNCHER pushbutton and repeats over the technical hot loop SECTION (*A*, *B*, *C*, *D*) LAUNCHER (*1*, *2*, *3*, *4*) DESIGNATED.

STEP 7. When the MISSILE READY light in the launching control trailer changes from amber to green, the launching control officer reports over the technical hot loop MISSILE READY.

The missile-tracking radar operator in the radar control trailer operates the MISSILE READY toggle switch to the MISSILE READY (up) position and repeats over the technical hot loop MISSILE READY.

STEP 8. If the designated missile is not automatically accepted, the missile-tracking radar operator reports the improper indications to the battery control officer over the command hot loop. If the battery control officer rejects the missile, he commands over the command hot loop, MISSILE REJECTED, RE-DESIGNATE. The missile-tracking radar operator repeats the command over the technical hot loop.

The operators repeat steps 5, 6, and 7 above until an acceptable missile has been designated.

STEP 9. When the battery control officer (BCO) determines it is time to fire the round, he commands FIRE over the command hot loop and simultaneously operates his FIRE switch to ON (up).

The computer operator repeats the fire command over the technical hot loop.

The launching control trailer panel operator immediately operates the manual FIRE switch to ON and reports FIRE SWITCH ON over the command hot loop.

Approximately 2 seconds later, the LAUNCH ORDER indicator light should automatically change from amber to green. If it does not, the launching control trailer-panel operator positions the manual LAUNCH ORDER toggle switch to ON (up). The panel operator reports over the command hot loop LAUNCH ORDER ON when the green LAUNCH ORDER indicator light lights.

STEP 10. BCO observes the LAUNCH indicator light. If it does not change from amber to green in approximately 10 seconds, the missile has been automatically rejected by the computer. The BCO then commands over the command hot loop MISSILE REJECTED. SECTION ____ ____ DESIGNATE. The computer operator repeats the command over the technical hot loop.

Repeat steps 5, 6, 7, 8, 9, and 10 above to fire another round.

STEP 11. Repeat as necessary to complete the engagement.

## 373. Launching Control Trailer Out of Action

*a. Loss Indications.* Loss of all data and communications between the battery control area and the launching control area.

*b. Action.*

STEP 1. Establish contact over radio net between the battery control area and the launching sections.

STEP 2. The battery control officer commands MANUAL OPERATION LAUNCHING CONTROL TRAILER OUT OF

ACTION (*current*) ~~ALERT~~ STATUS.

The computer operator repeats the command over the technical hot loop and thereafter reports any subsequent change in the alert status.

The launching section control panel operator opens the manual orders access door, operates the GYRO PRESET toggle switch to MANUAL (up) and the ALERT SELECTOR switch to the current alert status (white yellow, blue, or red).

The missile-tracking radar operator at the missile console in the radar control trailer positions the LOCAL DESIGNATE switch to LOCAL DESIGNATE (up).

STEP 3. Each launching section control panel operator reports SECTION (*A, B, C, D*) _____ MISSILES PREPARED over the technical hot loop. Thereafter each reports any change in the number of missiles prepared.

The computer operator records the number of missiles prepared for each section and keeps the battery control officer advised of the number of missiles prepared at each section.

STEP 4. At BLUE ~~ALERT~~; STATUS and when the BCO commands ON DECK, the launching section panel operator for each section operates the ON DECK toggle switch to ON (up).

STEP 5. At the appropriate time, the battery control officer commands SELECT SECTION (*A, B, C, D*).

The computer operator repeats command over the technical hot loop.

The launching section control panel operator for the section selected positions the SELECTED toggle switch to ON (up) and reports over the technical hot loop SECTION (*A, B, C, D*) SELECTED.

The missile-tracking radar operator in the radar control trailer depresses the corresponding SECTION pushbutton, and repeats SECTION (*A, B, C, D*) SELECTED over the technical hot loop.

STEP 6. At the appropriate time, the launching section selected designates the launcher to fire, and reports over the technical hot loop, SECTION (*A, B, C, D*) LAUNCHER (*1, 2, 3, 4*) DESIGNATED.

The missile-tracking radar operator in the radar control trailer depresses the corresponding LAUNCHER pushbutton and repeats SECTION (*A, B, C, D*) LAUNCHER (*1, 2, 3, 4*) DESIGNATED over the technical hot loop.

STEP 7. When the missile is ready to fire, the launching section panel operator reports over the technical hot loop MISSILE READY.

The missile-tracking radar operator positions the MISSILE READY toggle switch to MISSILE READY (up) and repeats MISSILE READY over the technical hot loop.

If the designated missile is not automatically accepted by the missile-tracking radar, the missile-tracking radar operator reports the improper indications to the battery control officer over the command hot loop. If the battery control officer rejects the missile he commands over the command hot loop MISSILE REJECTED—SECTION (*A, B, C, D*) DESIGNATE.

The missile-tracking radar operator repeats the command over the technical hot loop.

Repeat steps 5, 6, and 7 above, as required to obtain an acceptable missile.

STEP 8. When the MISSILE TRACKED and TARGET TRACKED indicator lights in the battery control trailer change from amber to green, the computer operator in the battery control trailer reads the gyro azimuth over the technical hot loop and the launching section panel operator in the selected section manually sets the gyro azimuth.

STEP 9. When the battery control officer is ready to fire the round, he commands over the command hot loop FIRE, and simultaneously operates his FIRE switch to ON.

The computer operator repeats the command over the technical hot loop.

The launching section control panel operator operates his FIRE switch to ON and reports FIRE.

Approximately 2 seconds later, he operates his LAUNCH toggle switch to ON and reports LAUNCH ORDER ON.

STEP 10. Repeats steps 3 through 9 as required to complete the engagement.

# PART FOUR
# EMPLACEMENT AND MARCH ORDER
# CHAPTER 16
# SEQUENCE

## 374. Personnel

The drills and procedures prescribed herein for emplacement and march order specify the recommended number of personnel to accomplish each task. Personnel not assigned specific duties are utilized as follows:

*a. Radar Collimation Mast Assembly.* Tests indicate that the emplacement and march ordering of the radar collimation mast assembly, where the deadmen are not permanently installed, requires more time than for the other equipment in the battery control area. If sufficient personnel are available, a special crew consisting of 6 men and 1 NCO in charge should be formed to emplace and march order the mast assembly. This special crew should start working as soon as possible.

*b. Cables.* Tests further indicate that emplacing and march ordering the cables requires considerable time. Personnel not assigned specific duties should be detailed for laying or picking up the cables.

## 375. Sequence

Table XLIX shows the recommended sequence for emplacement and march order.

## 376. Formations

When the commands FALL IN, COUNT OFF, or CALL OFF are given, the principles set forth in FM 22-5, Leadership, Courtesy, and Drill, will apply unless otherwise indicated.

*Table XLIX. Sequence of Events for March Order and Emplacement*

RESPONSIBLE SECTION

| | Fire control platoon | | | | | Comm | All Genr Oprs | Lchr Plat | Lchr Sec A | Lchr Sec B | Lchr Sec C |
|---|---|---|---|---|---|---|---|---|---|---|---|
| EQUIPMENT | Acq Radar M&S Tlr (8)<br>BCT (4) | RCT (4) | MTR (3) | TTR (3)<br>RCM (*) (8) | UNLOAD RCM (2) | Wire and Radio nets (5) | All Genr (7) | LCT (4) | See Lchr #1 (4) (7)<br>Lchr #2 (7)<br>Lchr #3 (7)<br>Lchr #4 (7) | See Lchr #1 (4) (7)<br>Lchr #2 (7)<br>Lchr #3 (7)<br>Lchr #4 (7) | See Lchr #1 (4) (7)<br>Lchr #2 (7)<br>Lchr #3 (7)<br>Lchr #4 (7) |
| | All prime mover drivers report to Comm Sgt as soon as towed load is uncoupled. Drop off cables as directed by Comm Sgt. Clear area of all vehicles. | | | | | | | | | | |
| CABLES | I/A (4) | Acq Radar to BCT (4) | MTR & TTR to RCT (4) | RCM (2) | Assist in I/A cables (2) | All Genr cables (2 per cable) | LCT to Sec (4) | See to Lchrs (7) | See to Lchrs (7) | See to Lchrs (7) | |
| | All personnel not assigned specific duties above will commence cable emplacement or march order as soon as the reels have been unloaded. | | | | | | | | | | |
| OSC | Orient, synchronize, and collimate all equipment. Set in parallax corrections. Complete initial tests, checks, and adjustments. | | | | | | | | | | |

Read across for concurrent procedures.
Read down for emplacement sequence.
Read up for march order sequence omitting bottom block.

BCT—battery control trailer.
I/A—interarea cable system.
OSC—orientation, synchronization, and collimation.
RCM—radar collimation mast.
RCT—radar control trailer.
LCT—launching control trailer.
(8)—number of men required, exclusive of drivers and chief of section.

* Concurrent with line 1 above if a special crew can be formed.

# CHAPTER 17
# BATTERY CONTROL AREA

## Section I. GENERAL

### 377. Layout of Equipment
(fig. 190)

There are certain distance limitations in the location of the major items of equipment in the battery control area. These are shown in figure 190.

### 378. Tracking Radar Antenna Assemblies

The tracking radar antenna assemblies must be between 250 and 360 feet apart.

### 379. Radar Collimation Mast Assembly

The radar collimation mast assembly must be within 80 feet of the perpendicular bisector of a line connecting the two tracking radar antennas and between 600 and 680 feet from the radar-connecting line.

### 380. Other Equipment

The other equipment may be located anywhere within the length of the cable assemblies provided.

### 381. Personnel

See table XLIX for sequence of events and responsible personnel.

## Section II. ACQUISITION RADAR AND MAINTENANCE AND SPARES TRAILER

### 382. General

This drill for emplacing the acquisition radar and the maintenance and spares trailer requires 1 NCO in charge (CS), a driver for each prime mover, and 8 men. Some of the components of the acquisition radar are transported in the maintenance and spares trailer during march order. Therefore, the acquisition radar should be emplaced before the maintenance and spares trailer is emplaced. The acquisition antenna is transported on the acquisition antenna trailer (fig. 191). Unless more permanent provisions are made, sandbags must be placed on each of the three mounting legs to stabilize the emplaced antenna. Some units may not have a maintenance and spares trailer or acquisition antenna trailer. The components of the acquisition radar will then come packaged separately (fig. 192). In this case, the procedure for emplacement and march order will vary only in the location of the components and removing the antenna from its container.

### 383. Fall In

To assemble the crew, CS commands FALL IN. All men fall in on the left side of the maintenance and spares trailer.

### 384. Count Off

The crew being in formation, CS commands COUNT OFF.

D reports DRIVER, preceded by particular prime mover he is driving, that is, acquisition or maintenance and spares.

1 through 8 report their numbers in consecutive order.

### 385. Call Off

The crew being in formation, CS commands CALL OFF.

D reports DRIVER, preceded by the particular prime mover he is driving, that is, acquisition or maintenance and spares.

1 reports COMPUTER OPERATOR.
2 reports RADAR OPERATOR.
3 reports RADAR OPERATOR.
4 reports RADAR OPERATOR.
5 reports COMPUTER OPERATOR.
6 reports COMPUTER OPERATOR.
7 reports ASSISTANT SECTION CHIEF.
8 reports COMPUTER OPERATOR.

### 386. Emplace Acquisition Radar

The crew being in formation, CS commands EMPLACE ACQUISITION RADAR.

*a. Moving Maintenance and Spares Trailer Into*

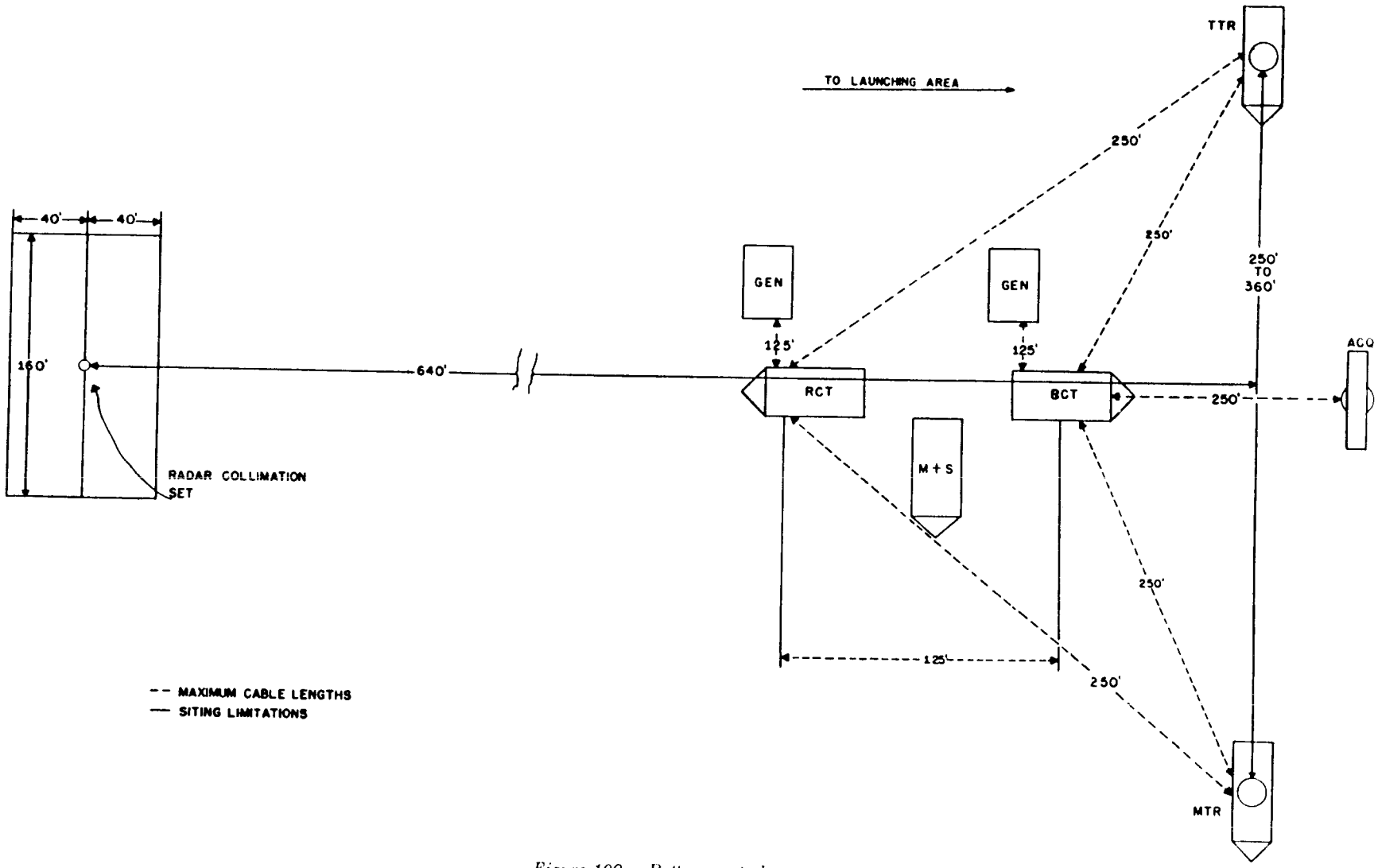


*Figure 190. Battery control area.*

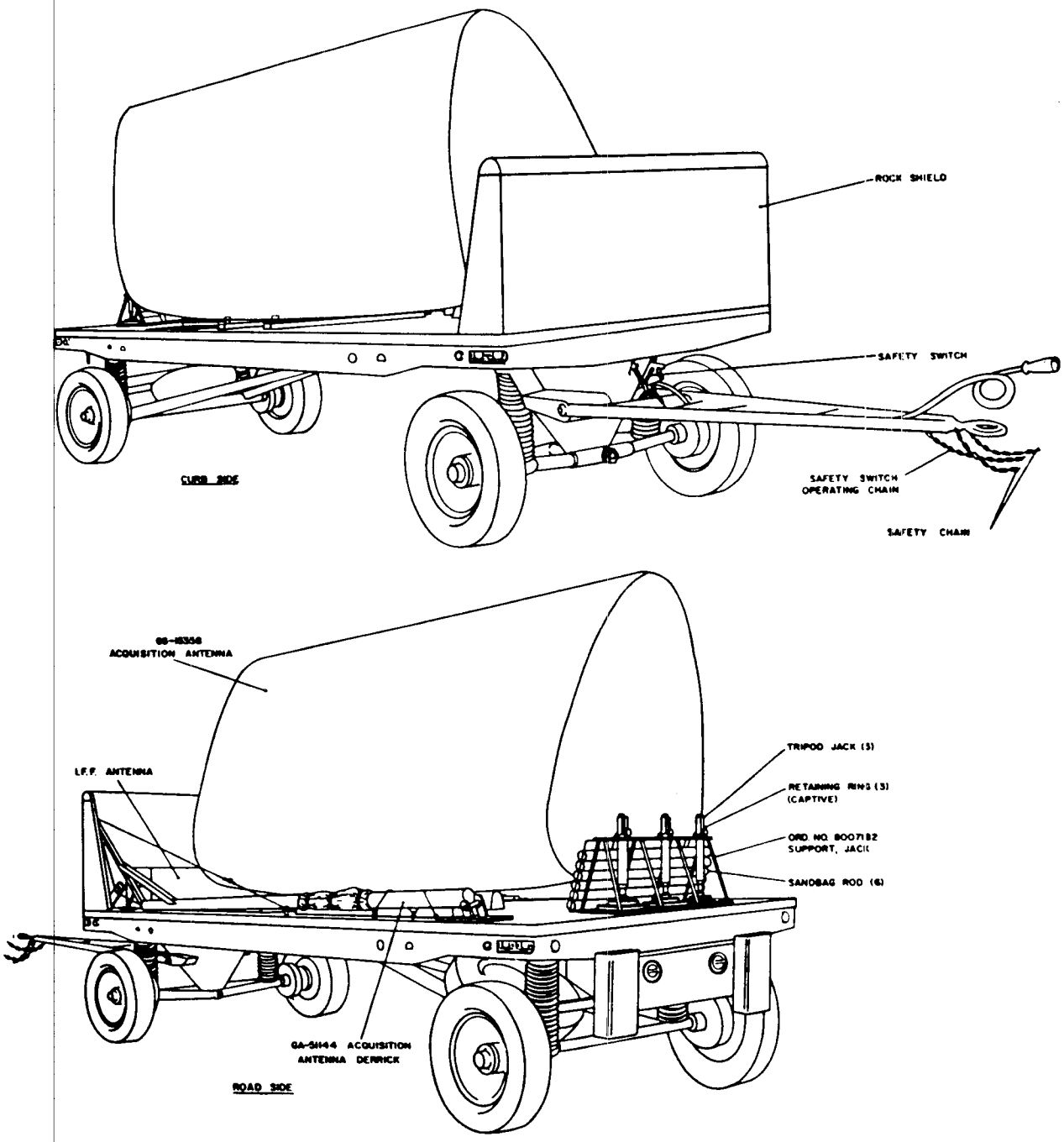


*Figure 191. Acquisition antenna trailer.*

*Position.* Under the direction of the **CS**, the maintenance and spares trailer is towed close to the site designated for the emplacement of the acquisition radar.

**1** sets the rear wheel parking brake on the trailer.

**2, 3, 4,** and **5** remove the chocks from the underside of the trailer and place one chock behind each wheel.

**6** and **7** release the two trunk-type latches which hold the trailer platform in its traveling position and lower the platform to its horizontal position.

**8** releases the step from the curbside of the rear bumper.

**6** and **7** open the rear trailer door, unlatch the stairs from the rear door, fasten the stairs

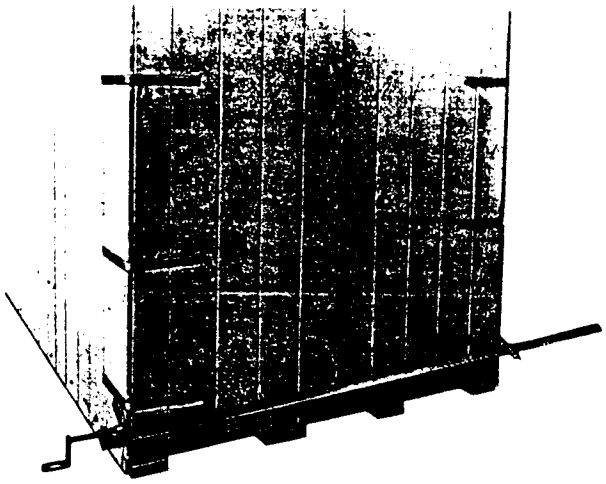

*Figure 192. Acquisition radar shipping container.*

to the platform, and adjust the stairs for proper length.

**4** removes the antenna installation kit from drawer 451 in the maintenance and spares trailer.

**5** removes the 30 empty 100-lb sandbags from bin 651 in the maintenance and spares trailer and places them near the assembly site.

**6, 7,** and **8** remove the tiedown assemblies which secure the acquisition modulator, the rf coupler, and the antenna drive unit to the trailer floor (fig. 193).

**All men** carry the acquisition modulator to the exact location designated for emplacing the acquisition radar.

**All men** remove the acquisition rf coupler from the trailer, set it on top of the modulator, aline the white stripes painted on each unit, and lock the 2 units together by inserting the 3 captive pins in their holes.

**CS** opens the waveguide cover on the rf coupler and locks the cover in the open position.

**All men** remove the acquisition antenna drive unit from the trailer. The drive unit is rolled to the trailer platform on its rolling rims.

**All men** place the antenna drive unit on top of the rf coupler, aline the white stripes painted on each unit, and lock the 2 units

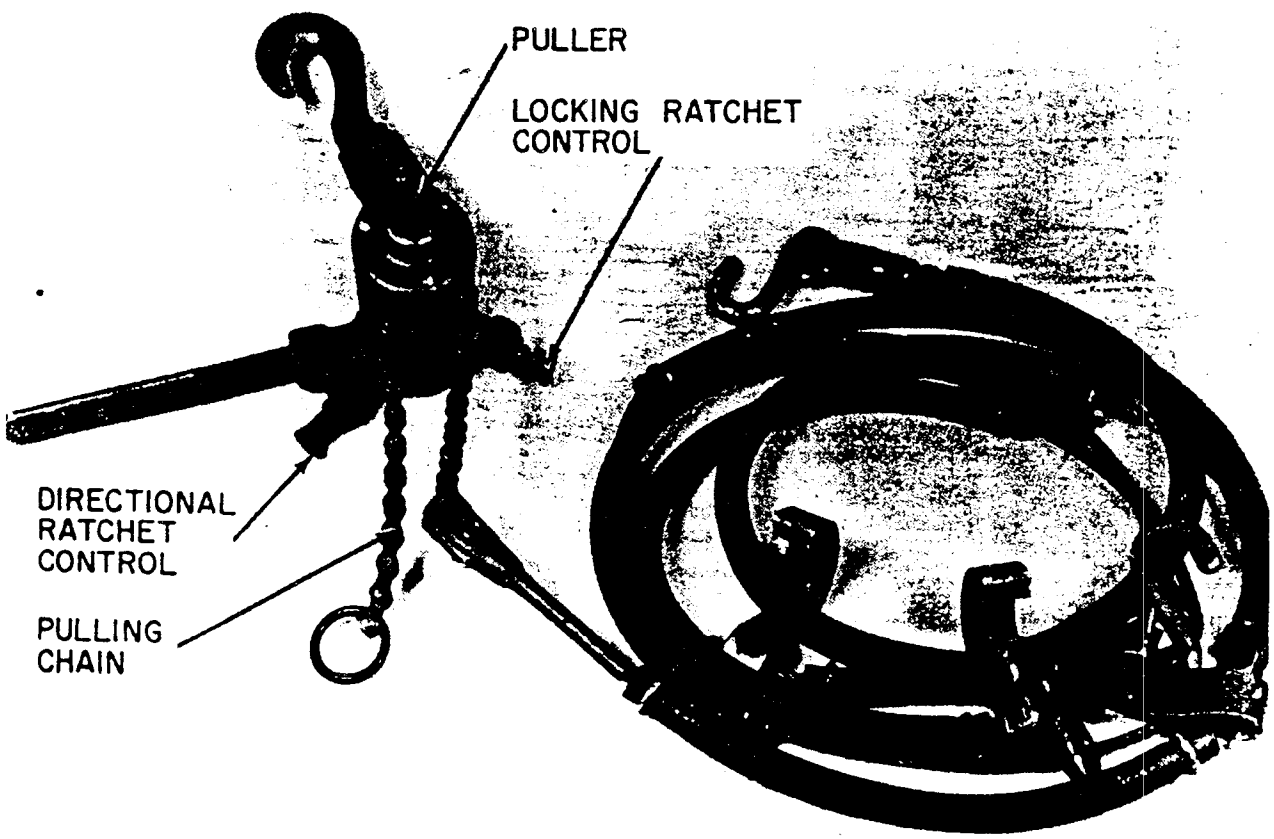


*Figure 193. Tie-down mechanisms.*

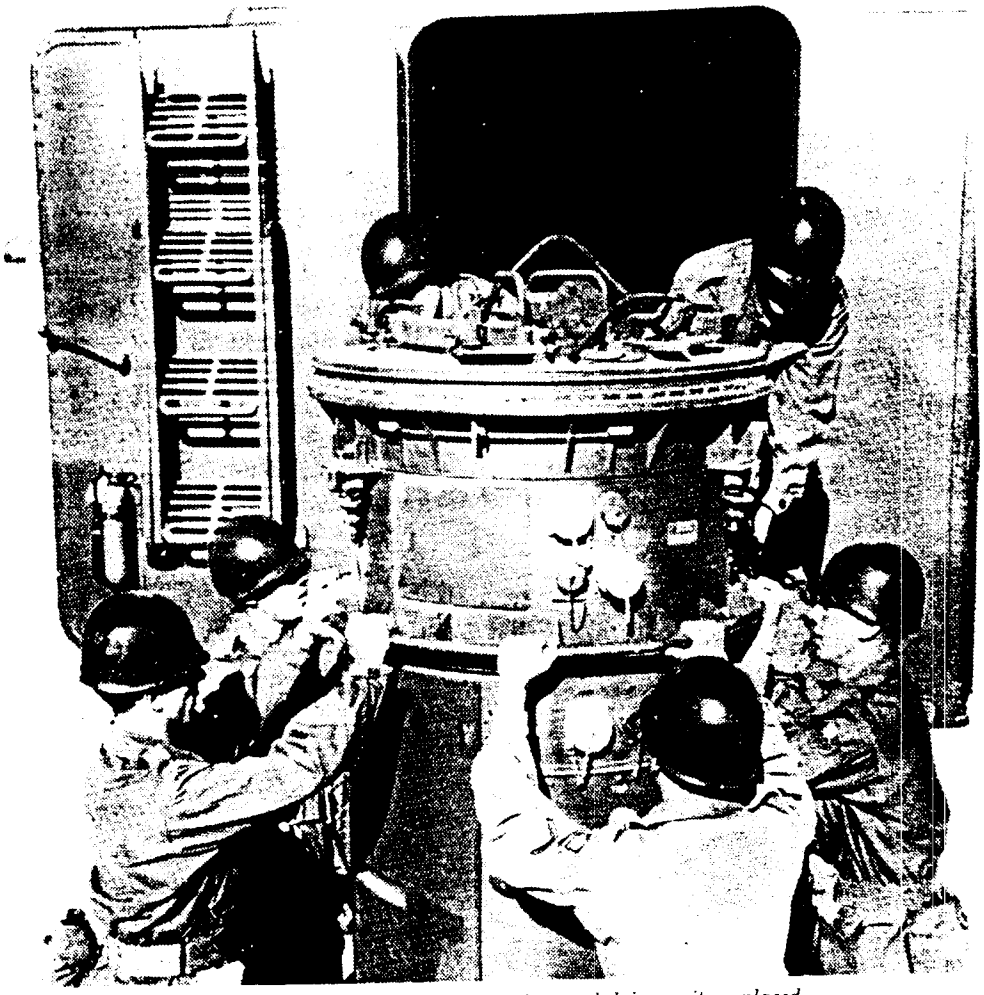

*Figure 194. Modulator, rf coupler, and drive unit emplaced.*

together by inserting the 3 captive pins in their holes (fig. 194).

**6** and **7** remove the acquisition antenna mounting legs and the leg braces from the maintenance and spares trailer and lay them on the ground near the emplacement site.

*b. Installing Mounting Legs* (fig. 195).

**5, 6,** and **7** install the antenna mounting legs by inserting the ball joint at the top of each leg into the receiving socket on the acquisition antenna drive unit and fasten the legs by tightening the hand screws.

**8** removes the jack assemblies and the sandbag rods from the acquisition antenna trailer.

**5, 6,** and **7** attach the leg braces to the legs.

**5, 6, 7,** and **8** attach a jack assembly to each leg by raising each leg in turn and fastening the jack assembly to the raised leg with the swing bolts provided. Two sandbag rods are inserted in each jack assembly.

**1, 2, 3,** and **4** fill the sandbags and place 5 filled sandbags on each side of each of the 3 mounting legs. The sandbags should lie on the sandbag rods, but must allow sufficient clearance for operating the jack handles.

**5, 6,** and **7** under the direction of the **CS,** extend the jacks until the assembled units are off the ground and approximately level.

*c. Installing Antenna.* Under the direction of the **CS,** the acquisition antenna trailer is towed into position so that curb side of the trailer is parallel to and approximately 6 feet from a leg brace on the antenna assembly.

**1** sets the parking brake on the trailer.

**2, 3, 4,** and **5** remove the chocks from the underside of the trailer and place one chock behind each wheel.

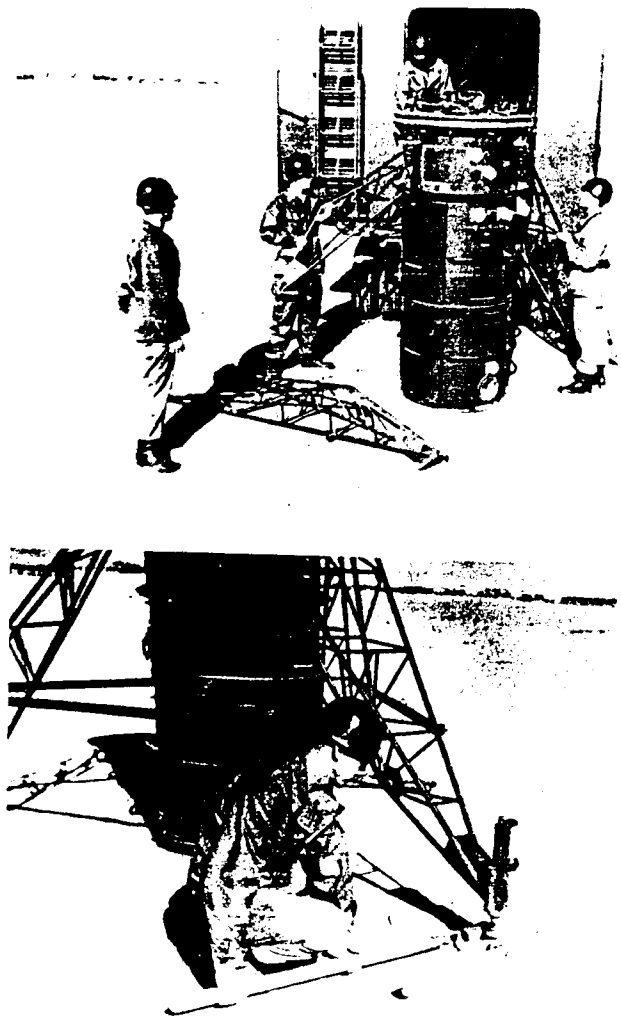

*Figure 195. Attaching legs and braces.*

**5** and **6** remove the upper and lower derrick brackets from the storage box at the rear of the acquisition antenna trailer and fasten the upper bracket to the antenna drive unit and the lower bracket to the leg brace adjacent to the trailer.

**7** and **8** loosen the derrick cable.

**7** and **8** remove two guy ropes from the storage rack on the antenna trailer and clip them to the eye-rings on the top of the derrick.

**All men** remove the derrick from the trailer, carry it to the emplacement site, and position the derrick so that the base plate is under the lower derrick bracket. While **3** braces the derrick base plate so it does not slip, they raise the derrick and slip it into the upper and lower derrick brackets.

**4** and **5** close and lock the upper and lower derrick bracket locks (fig. 196).

**6** and **7** remove the harness from the front storage box on the acquisition antenna trailer and fasten it to the derrick hook. The open end of the harness frame should be toward the derrick.

**3** and **4** remove the antenna loading platform from the bed of the antenna trailer, unfold and lock the supporting legs in place, fasten the platform to the trailer, and level the loading platform (fig. 197).

**8**, operating the derrick handcrank, raises the derrick hook until it is above the level of the antenna. Do not damage the crane by raising the hook too far.

**1** and **2** release and remove the antenna chocks that secure the antenna to the trailer.

**All men** slide the antenna from its mounting rails on the antenna trailer on to the loading platform.

**3** removes the two remaining guy ropes from the storage box on the antenna trailer.

**5** and **6** fasten the 2 guy ropes to the 2 hoisting handles on the acquisition antenna on the side away from the derrick.

**8** lowers the harness to the antenna.

**3, 4, 5,** and **6,** working in pairs, fasten the straps and cables of the harness to the hoisting handle rings on both sides of the antenna.

Under the direction of the CS, **8,** using the derrick, lifts the antenna from the loading platform until it clears the top of the antenna drive unit. While **8** is lifting the antenna, **1, 2, 3,** and **4** guide the antenna with the guy ropes (fig. 198). Care must be taken not to break the antenna chain hoist or that the chain does not get jammed in the gear mechanism by attempting to raise the antenna beyond the limits of the derrick.

**6** and **7** pivot the derrick until the antenna is positioned directly over the antenna drive unit (fig. 199).

Under the direction of the CS, **8** lowers the antenna as the CS guides it into the clamps on the antenna drive unit. The CS makes certain the antenna mounting registering marks are properly alined.

**7** and **8** tighten the four clamps on the antenna

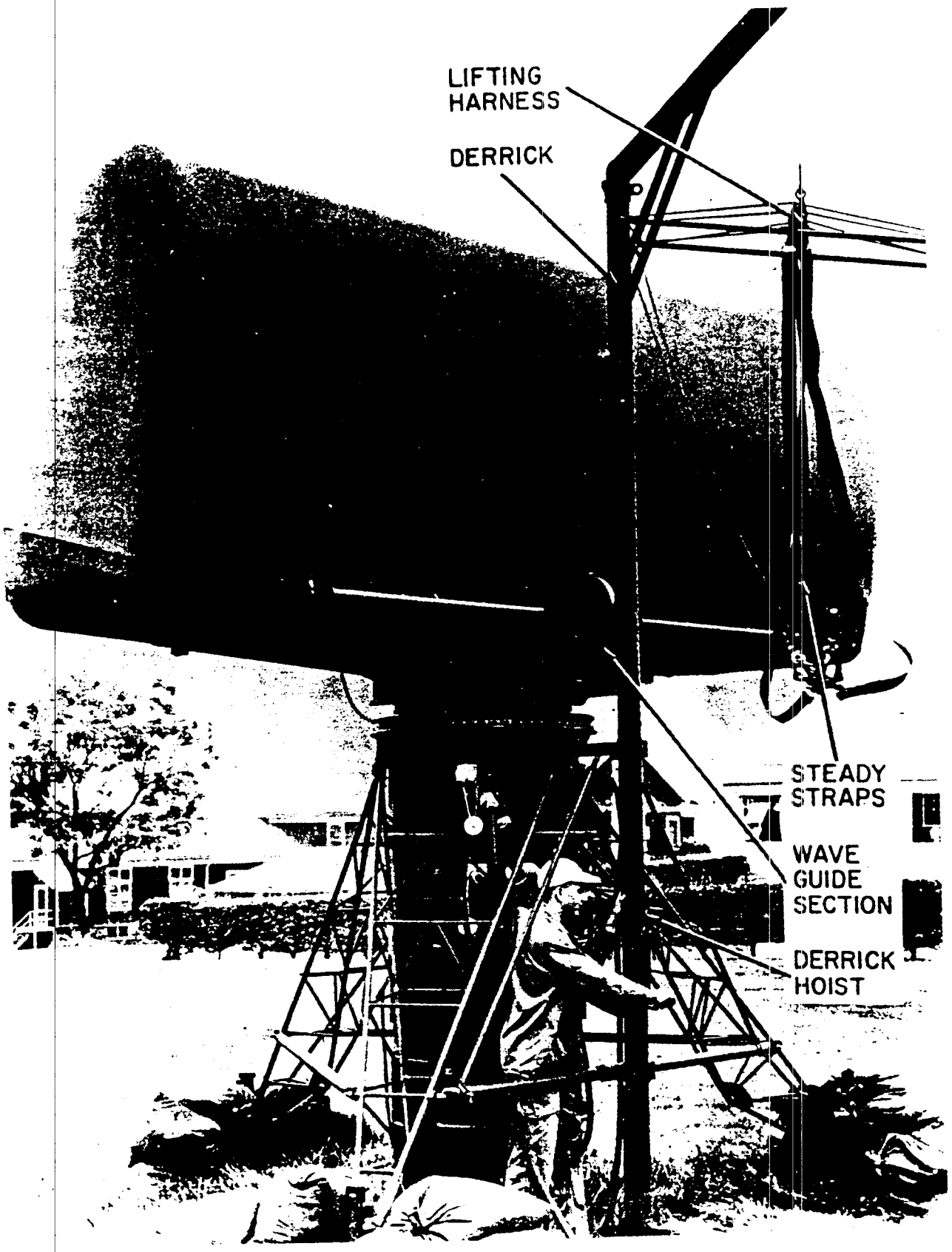


*Figure 196. Derrick installed.*

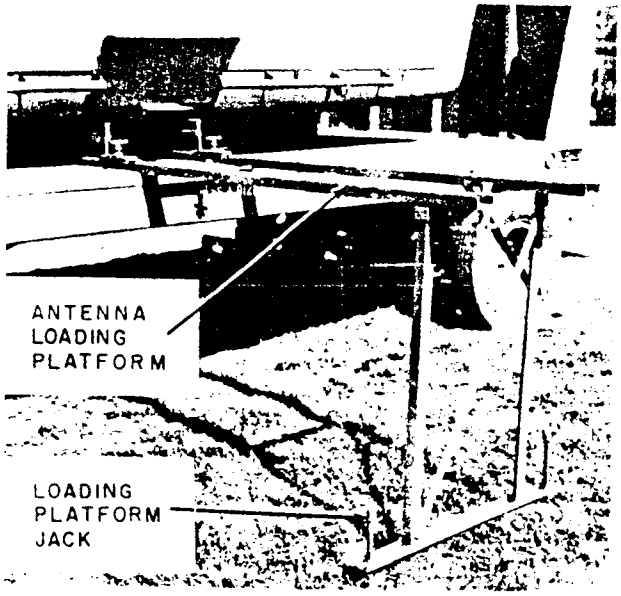


*Figure 197. Loading platform emplaced.*

drive unit until the antenna is securely fastened.

*d. Completing the Assembly* (fig. 200).

**1** obtains the twisted waveguide section from drawer 641 and the bent waveguide from bin 651 in the maintenance and spares trailer, removes the cover from the antenna drive unit waveguide coupling, attaches the twisted waveguide section to the antenna drive unit, and the bent waveguide section between the twisted waveguide section and the antenna coupling.

**2** fastens the power-to-antenna cable on top of the antenna drive unit to the hydraulic control unit.

**1** fills the antenna drive dust seal with Beacon 324 grease.

**2** fastens the acquisition orientation test set in its place. The test set is mounted on

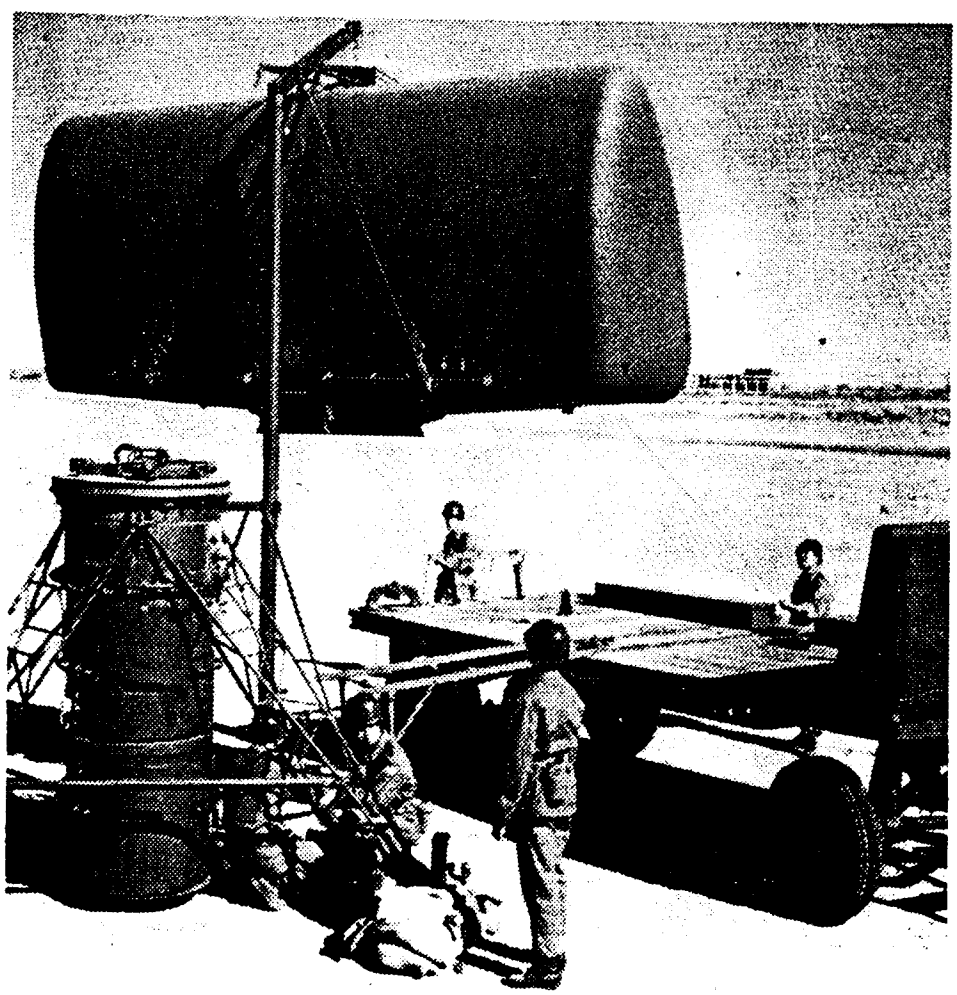

*Figure 198. Raising acquisition antenna.*

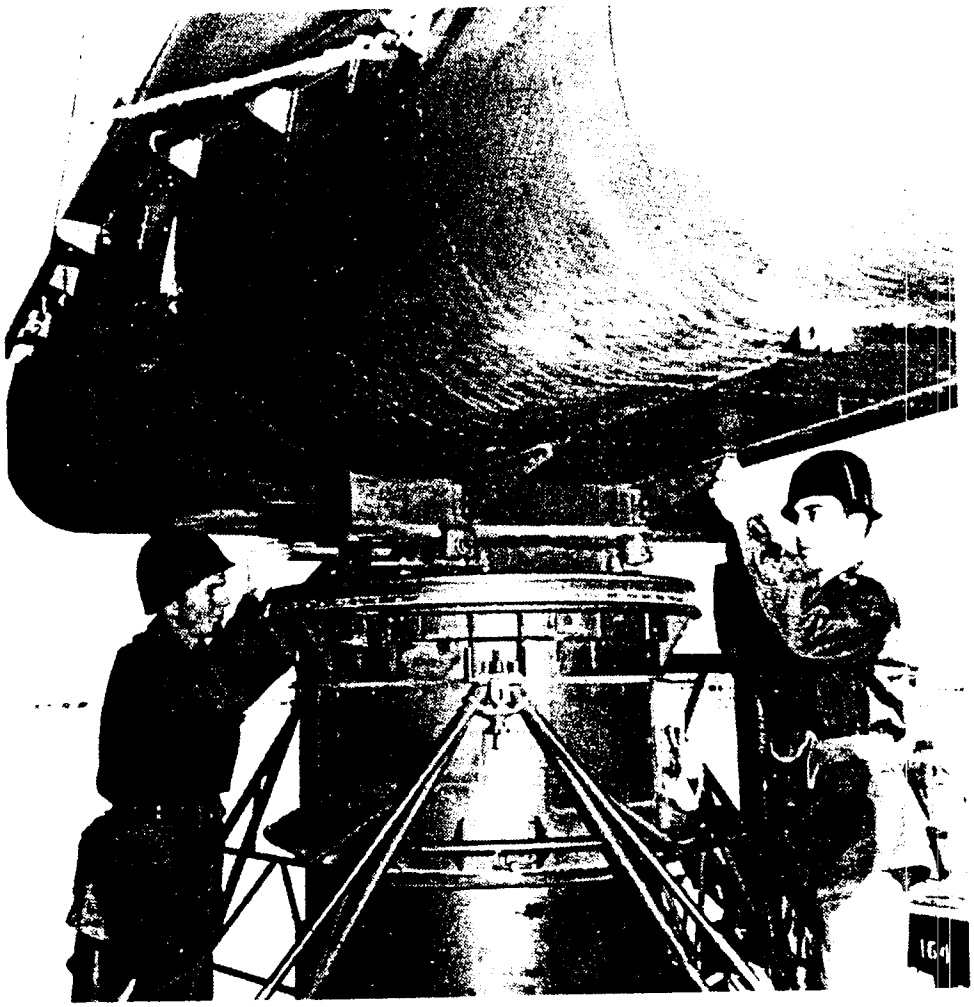

*Figure 199. Placing antenna on drive unit.*

two dowel pins located on the rotating platform of the acquisition antenna.

**2** obtains the five short power cables from bin 163 and the cable connecting wrench from drawer 451 in the maintenance and spares trailer and connects the cables to the appropriate units on the antenna.

Under the direction of the **CS**, **5**, **6**, and **7** adjust the jack assemblies until both levels indicate level. The **CS** then closes the cover on the orientation test set. The orientation test set contains two levels. To level the antenna, manually rotate the antenna until 1 of the levels in the test set is perpendicular to 1 side of the triangle formed by the bases of the 3 antenna mounting legs. Leveling can then be accomplished without further rotation of the antenna.

*e. Removing Handling Equipment.*

**3** and **4** remove the guy ropes from the hoisting handles and store the ropes in the storage box on the antenna trailer.

**5** and **6** unfasten the harness straps and cables from the hoisting handle rings.

**8** lifts the harness with the derrick crane, pivots the derrick away from the antenna, and lowers the harness to the ground.

**7** unfastens the harness from the derrick hook, winds the straps and cables around the harness frame, and stores the harness assembly in the front storage box on the trailer.

**5** and **6** remove the loading platform from the side of the antenna trailer and clamp it in its place on the trailer.

**5** and **6** loosen the upper and lower derrick bracket locks.

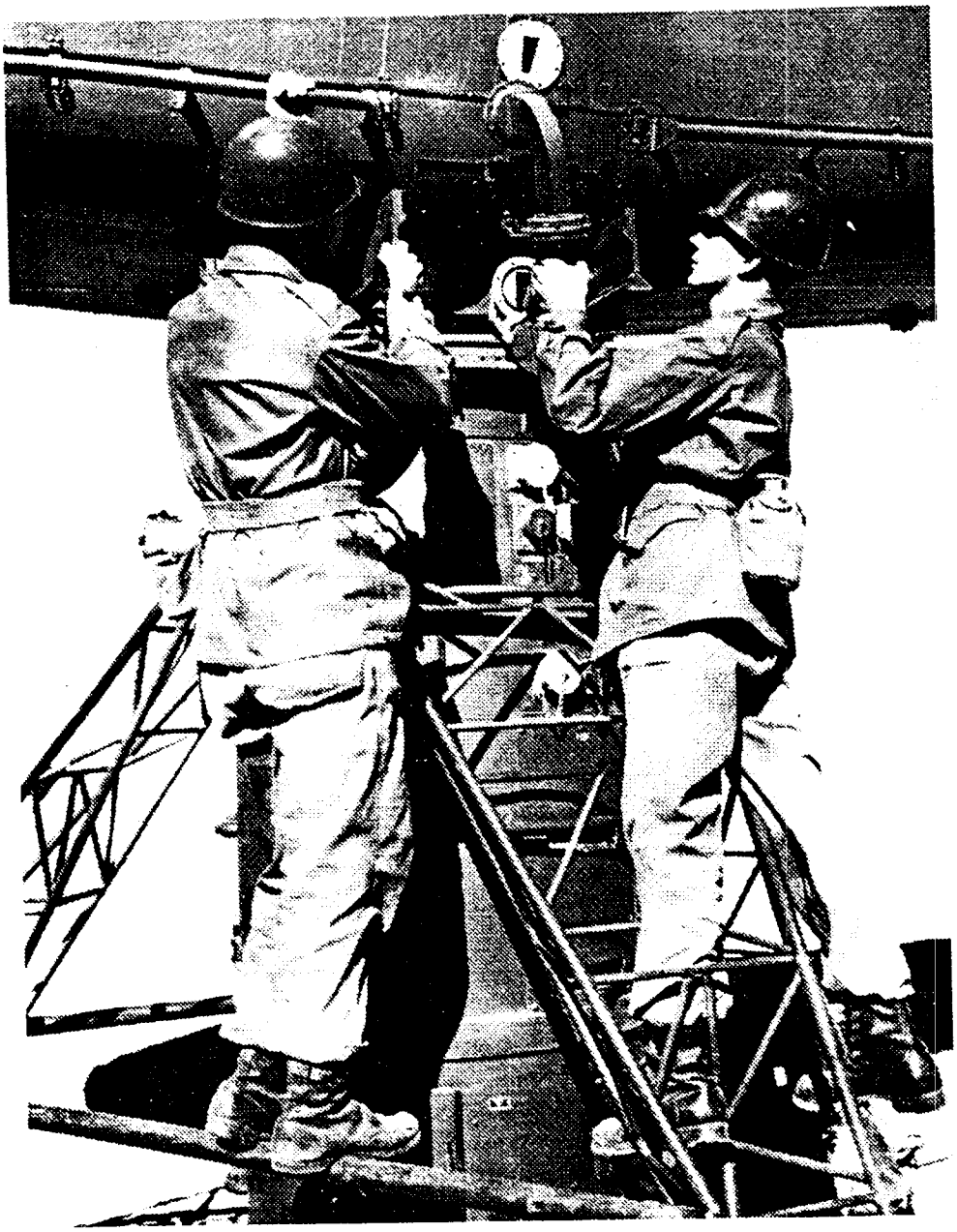

*Figure 200. Completing assembly of the acquisition radar.*

While **3** braces the derrick base plate to avoid slipping, **all men** lower the derrick.

**7** and **8** remove the two guy ropes from the eye rings on top of the derrick and store them in the storage rack on the antenna trailer.

**All men** carry the derrick to the antenna trailer and store it in its proper place on the trailer.

**4** and **5** remove the upper and lower derrick brackets from the leg brace and the antenna drive unit and store them in the rear storage box on the antenna trailer.

**CS** opens the cover on the antenna disabling switch S1 on the antenna drive unit and operates the switch to the ON (up) position.

**CS** insures antenna has been properly emplaced (fig. 201).

**6** collects and stores all the tools.

## 387. Report

As soon as all men have finished, **CS** commands FALL IN. The crew falls in at the antenna assembly. CS then commands REPORT.

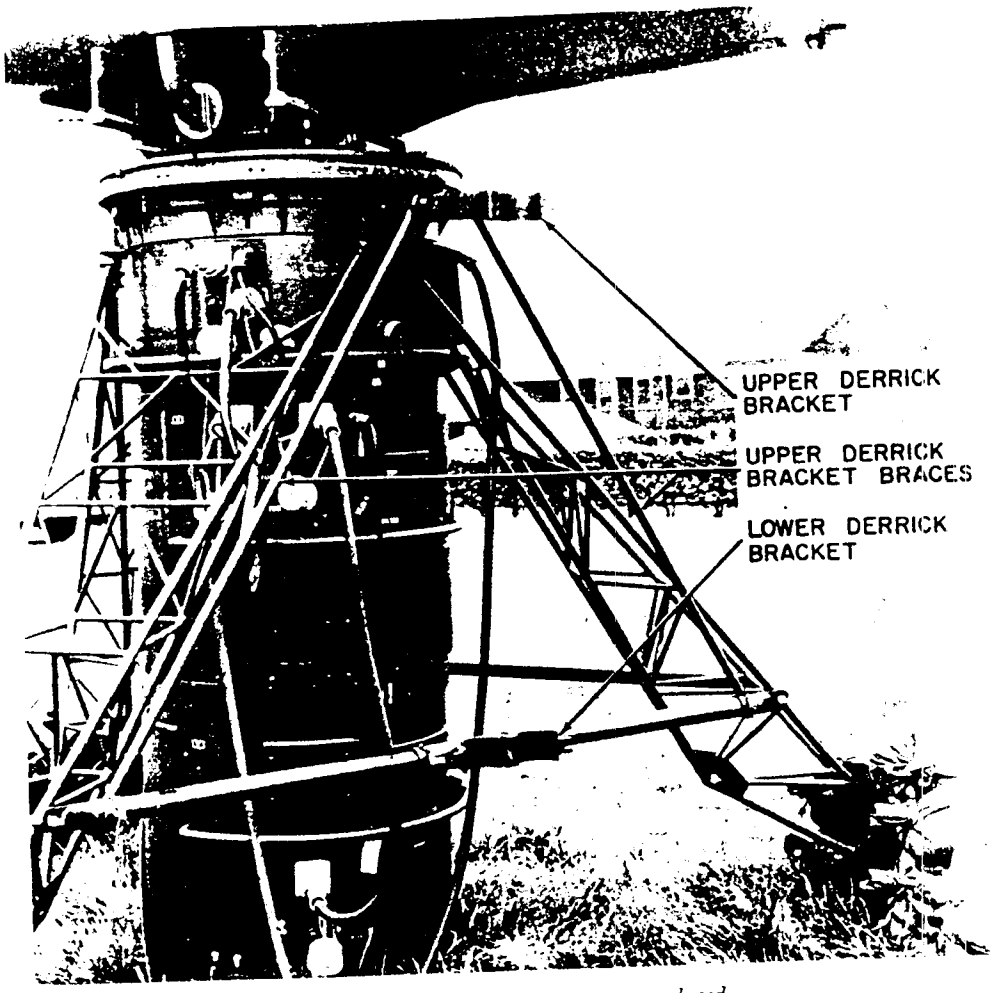


*Figure 201. Acquisition antenna emplaced.*

**D** reports ACQ PRIME MOVER READY.
**D** reports ANTENNA PRIME MOVER READY.
**1** reports DUST SEAL FILLED.
**2** reports TEST SET INSTALLED.
**3** reports GUY ROPES STORED.
**4** reports DERRICK STORED.
**5** reports LOADING PLATFORM STORED.
**6** reports TOOLS COLLECTED AND STORED.
**7** reports LEVELED AND SANDBAGGED.
**8** reports ANTENNA SECURED.

## 388. Emplace Trailer

After any deficiencies reported in paragraph 387 above have been corrected, CS commands EMPLACE TRAILERS.

**5, 6, 7,** and **8** emplace the antenna trailer.

**1, 2, 3,** and **4** emplace the maintenance and spares trailer.

*a. Antenna Trailer.*

**5, 6,** and **7** remove the chocks from behind the wheels on the acquisition antenna trailer and store them on the underside of the trailer.

**8** releases the rear-wheel parking brake and checks to insure the brake is completely released.

**D** tows the trailer to the motor pool and then reports to the communication sergeant at the battery control trailer.

*b. Maintenance and Spares Trailer.*

**3** and **4** remove the stairs from the platform, fasten them to the rear door, and close and lock the rear trailer door.

**1, 2, 3,** and **4** remove the chocks from behind the trailer wheels and store the chocks on the underside of the trailer.

**3** and **4** raise and lock the rear platform.

**4** raises and locks the folding step on the curbside of the rear bumper.



370064 O—56——27

**3** releases the rear-wheel parking brake.

**Driver** tows the maintenance and spares trailer to the site where it is to be emplaced.

**1, 2, 3,** and **4** emplace the maintenance and spares trailer, using the procedure described in paragraph 400.

## 389. Report

As soon as each trailer is emplaced, the crew members return to the maintenance and spares trailer. The **CS** then commands FALL IN. After the crew (less drivers) has assembled, **CS** commands REPORT.

**1** reports MAINTENANCE AND SPARES TRAILER EMPLACED.

**2** no report.

**3** no report.

**4** no report.

**5** reports ANTENNA TRAILER EMPLACED.

**6** no report.

**7** no report.

**8** no report.

## 390. March Order

This drill for march ordering the acquisition radar and the maintenance and spares trailer is based upon the use of 1 NCO in charge (CS), a driver for each prime mover, and 8 men. The radar and trailer will be march ordered only upon order of the battery commander. The drivers will not be present until after all cables have been placed on reels and all reels loaded on the prime movers.

## 391. Fall In

To assemble the crew, the **CS** commands MARCH ORDER, FALL IN.

**1** through **8**, less drivers, fall in at the acquisition radar antenna.

## 392. Count Off

The crew being in formation, the **CS** commands COUNT OFF.

**1** through **8** report their numbers consecutively.

## 393. Call Off

The crew being in formation, the **CS** commands CALL OFF.

**1** reports COMPUTER OPERATOR.

**2** reports RADAR OPERATOR.

**3** reports RADAR OPERATOR.

**4** reports RADAR OPERATOR.

**5** reports COMPUTER OPERATOR.

**6** reports COMPUTER OPERATOR.

**7** reports ASSISTANT SECTION CHIEF.

**8** reports COMPUTER OPERATOR.

## 394. March Order Drill

The crew being in formation, the **CS** commands MARCH ORDER.

*a. Preparing Maintenance and Spares Trailer.*

**1, 2, 3,** and **4** go to the site where the maintenance and spares trailer is emplaced.

**1** and **2** raise and fasten the trailer jacks in their traveling position. Lower the four jacks at a uniform rate.

**3** and **4** close and lock the escape hatches, the personnel air intake, the air exhaust ventilator and raise and lock the workbench. Be sure the radar rf test set is securely fastened in its traveling position.

**3** removes the stairs from the platform, fastens them to the inside of the trailer door, and closes and locks the trailer door.

**3** and **4** raise and fasten the platform in its traveling position.

**3** raises and locks the folding step to the rear bumper.

**1** and **2** couple the trailer to the prime mover.

**1** and **2** remove and store the chocks on the underside of the trailer.

**3** connects the intervehicular cable (air hose on later models), the emergency switch operating chain, and the two safety chains to the prime mover.

**1** releases the rear-wheel parking brake and checks that it is completely released.

**D** tows the trailer to the acquisition radar site.

*b. Preparing to Remove Antenna.*

Under the direction of the **CS, D** tows the antenna trailer into position so that curbside is parallel to, and approximately 6 feet from, a leg brace on the acquisition radar.

**CS** operates the antenna disable switch S1 to the OFF (down) position and replaces the switch cover.

**5** sets the rear-wheel trailer parking brake.

**6, 7,** and **8** remove the chocks from the underside of the trailer and place a chock behind each wheel

**5** and **6** remove the upper and lower derrick brackets from the storage box at the rear of the antenna trailer and fasten them to

the leg brace and the antenna drive adjacent to the antenna trailer.

**7** and **8** loosen the derrick cable.

**7** and **8** remove two guy ropes from the storage rack on the antenna trailer and clip them to the eye rings on top of the derrick.

**5, 6, 7,** and **8** remove the derrick from the trailer and carry it to the acquisition antenna site. **8** braces the base plate to prevent slipping while **5, 6,** and **7** raise the derrick and slip it into the upper and lower brackets.

**5** and **6** close and lock the upper and lower derrick locks.

**5** and **6** remove the harness assembly from the front storage box on the antenna trailer and fasten the harness to the derrick hook. The open end of the harness frame should be toward the derrick

**8** turns the derrick crank until the hook is above the level of the antenna.

c. *Removing Antenna.* The remaining steps in march order will not be started until **1, 2, 3,** and **4** have completed the preparation of the maintenance and spares trailer and the acquisition radar antenna trailer has been towed into position near the acquisition radar. **1, 2, 3,** and **4** will set the rear-wheel parking brake, lower the platform, fasten the stairs in position, remove the antenna installation kit from drawer 451 and place it near the antenna site.

**3** and **4** remove the unloading platform from the bed of the antenna trailer, unfold and lock the supporting legs in place, fasten the platform to the antenna trailer, and level the loading platform.

**1** and **2** place the antenna chocks so that they will not interfere with the loading of the antenna on the trailer

**2** obtains the cable-connecting wrench from drawer 451 in the maintenance and spares trailer and removes the five short power cables from the acquisition radar. He stores the cables in bin 163 and the wrench in drawer 451 in the maintenance and spares trailer.

**1** removes the acquisition orientation test set and stores it in the maintenance and spares trailer.

**1** disconnects the cable on top of the antenna drive unit from the hydraulic control unit.

**1** removes the twisted waveguide and the bent waveguide sections and stores them in drawer 641 and bin 651 respectively in the maintenance and spares trailer.

**5** and **6** remove the two remaining guy ropes from the storage box on the antenna trailer.

**5** and **6** fasten the 2 guy ropes to the 2 hoisting handles on the acquisition antenna on the side away from the derrick

**6** and **7** pivot the derrick until the harness is directly above the antenna

**8** lowers the harness to the antenna.

**3, 4, 5,** and **6,** working in pairs, fasten the harness straps and cables to the hoisting handle rings on both sides of the antenna.

**8** raises the harness until it is tight around the antenna but without any lift on the antenna.

**7** and **8** loosen the four clamps on the antenna.

Under the direction of the **CS, 8** lifts the antenna up from the drive unit by turning the derrick handcrank. **1, 2, 3,** and **4** guide and steady the antenna with the guy ropes. Care must be taken not to break the antenna chain hoist or that the chain does not get jammed in the gear mechanism by attempting to raise the antenna beyond the limits of the derrick.

**6** and **7** pivot the derrick until the antenna is above the loading platform.

Under the direction of the **CS, 8** lowers the antenna onto the loading platform.

**5** and **6** remove the two guy ropes from the antenna hoisting handles and store them in the storage box on the antenna trailer.

**3, 4, 5,** and **6** remove the harness from the antenna.

**All men** push the antenna from the loading platform onto the mounting rail on the antenna trailer.

**1** and **2** fasten the antenna chocks to the antenna trailer.

d. *Disassembling Handling Equipment.*

**5** and **6** remove the harness from the derrick and store the harness on the antenna trailer.

**5** and **6** unlock and open the upper and lower derrick bracket locks.

While **3** holds the derrick base plate to prevent slipping, **5, 6, 7,** and **8** remove the derrick from the derrick brackets and carry it to the antenna trailer.

**7** and **8** remove the two guy ropes from the eye rings on top of the derrick and store them in the storage rack on the antenna trailer.

**7** and **8** fasten the derrick to the antenna trailer.

**5** and **6** remove the upper and lower derrick brackets from the antenna drive unit and leg brace and store them in the storage box on the antenna trailer.

**5, 6,** and **7** fully retract the jacks on the mounting legs of the acquisition radar. Lower the jacks uniformly.

**1, 2, 3,** and **4** remove the sandbags from the antenna mounting legs and store the emptied bags in bin 651 in the maintenance and spares trailer.

**5, 6, 7,** and **8** remove the sandbag rods and the jack assemblies from the mounting legs and store them on the antenna trailer.

**5, 6,** and **7** remove the leg braces from the mounting legs, remove the mounting legs from the antenna drive unit, and store the legs and braces in the maintenance and spares trailer.

**All men** lift the antenna drive unit from the rf coupler and set it in its traveling position in the maintenance and spares trailer. The three locking pins that secure the drive unit to the rf coupler must be removed first.

The **CS** closes and locks the waveguide cover on the acquisition rf coupler.

**All men** lift the rf coupler from the modulator and set it in its traveling position in the maintenance and spares trailer. The three locking pins that secure the rf coupler to the modulator must be removed first.

**All men** place the modulator in its traveling position in the maintenance and spares trailer.

*e. Final Preparation of Maintenance and Spares Trailer.*

**6** checks the antenna installation kit for completeness. After all parts of the kit are accounted for, he stores the kit in drawer 451 of the maintenance and spares trailer.

**6, 7,** and **8** fasten the acquisition antenna drive unit, rf coupler, and modulator in their traveling positions with the tiedown assemblies.

**1, 2, 3,** and **4** remove the wheel chocks from behind the wheels of the trailer and store the chocks on the underside of the maintenance and spares trailer.

**6** and **7** remove the stairs, secure them to the inside of the trailer door, close and lock the trailer door.

**6** and **7** raise and fasten the platform in its traveling position.

**8** locks the folding step into its traveling position.

**7** releases the trailer rear-wheel parking brake and checks to insure it is completely released.

*f. Final Preparation of Acquisition Antenna Trailer.*

**1, 2, 3,** and **4** remove the wheel chocks from behind the antenna trailer wheels and store the chocks on the underside of the trailer.

**4** releases the antenna trailer rear-wheel parking brake and checks to see it is completely released.

## 395. Report

After the trailers have been prepared for march order and the prime movers coupled to the trailers, the **CS** assembles his crew by commanding FALL IN. The crew and drivers fall in at the trailer. **CS** then commands REPORT.

**D** reports MAINTENANCE AND SPARES PRIME MOVER READY.

**D** reports ACQUISITION PRIME MOVER READY.

**1** reports CHOCKS STORED.

**2** reports SANDBAGS STORED.

**3** reports ANTENNA SECURED.

**4** reports TRAILER BRAKE RELEASED.

**5** reports LEG BRACES STORED.

**6** reports INSTALLATION KIT COMPLETE.

**7** reports TRAILER BRAKE RELEASED.

**8** reports ANTENNA UNITS STORED AND SECURED.

**Drivers** then tow the trailers to their designated area.

# Section III. BATTERY CONTROL TRAILER AND RADAR CONTROL TRAILER

## 396. Personnel

This drill for the emplacement of and march order for the battery control and radar control trailers are very similar. Therefore, both trailers are included in this section. Unless otherwise specified, each step is applicable to both trailers. This drill requires 1 NCO in charge (CS), 1 driver, and 4 men for each trailer.

## 397. Fall In

To assemble the crews, the **CS** commands FALL IN. The crews fall in on the left side of the battery control trailer.

## 398. Count Off

The crew being assembled, the **CS** commands COUNT OFF.

**D** reports DRIVER.

**1** through **4** report their numbers consecutively.

**1** through **4** report their numbers consecutively.

## 399. Call Off

The crew being assembled, the **CS** commands CALL OFF.

**D** reports DRIVER.

**1** reports COMPUTER OPERATOR.

**2** reports COMPUTER OPERATOR.

**3** reports COMPUTER OPERATOR.

**4** reports ASSISTANT CHIEF OF SECTION.

**D** reports DRIVER.

**1** reports RADAR OPERATOR.

**2** reports RADAR OPERATOR.

**3** reports RADAR OPERATOR.

**4** reports RADAR OPERATOR.

## 400. Emplace Trailers

The crew being in formation, the **CS** commands EMPLACE TRAILERS. The driver, computer operators, and assistant chief of section emplace the battery control trailer while the radar operators emplace the radar control trailer.

*a. Setting Trailer in Position.* Under the direction of the **CS**, the trailer is towed to its designated location.

**1** sets the rear-wheel parking brake.

**2, 3,** and **4** remove the chocks from the underside of the trailer and place one chock behind each wheel.

**1** disconnects the emergency switch operating chain and the two safety chains on the trailer towbar from the prime mover.

**1** disconnects the intervehicular cable or air hoses from the socket at the prime mover and fastens the cable or hoses around the towbar and away from the ground.

**1, 2,** and **3** uncouple the trailer from the prime mover.

**D** drives the prime mover a short distance away and then reports to the communication sergeant for cable detail.

**1, 2, 3,** and **4** attach the spring snubbers on the front and rear undercarriages (fig. 202).

**1** and **2** release the two trunk-type latches which hold the platform in its traveling position and lower the platform to the horizontal position.

**1** releases the folding step from the curbside of the rear bumper.

**3** and **4** open the rear trailer door and lock it in the open position, remove the stairs by releasing the spring-loaded levers which clamp the stairs to the inside of the door, fasten the stairs to the platform, and adjust them for proper length.

**1** bleeds the air from the trailer air tanks (new model trailers only).

*b. Preparing Inside of Trailer.*

**1** enters the trailer, opens the escape hatches, and locks them in the open position.

**2** opens the equipment-cooling intake, the equipment-cooling exhaust, the personnel air intake, the rear door air-exhaust ventilator, and locks all the covers in their open position.

**1** releases the tiedown mechanisms which hold the chairs in their traveling position and places the chairs at the operating consoles.

*c. Mounting Siren (Battery Control Trailer Only)* (fig. 203).

**3** loosens the wingnuts which fasten the siren to the roadside wall of the battery control trailer and removes the siren. He then fastens the siren to the bracket on the rear curbside corner of the trailer roof, removes the chained connector cap from the siren power connector just above the door, and connects the siren cable.

*d. Jacking Up Trailer* (fig. 204).

**4** obtains the jack crank from behind the rear bumper pad support, inserts the crank into the crankshaft, turns the crank until the jack is disengaged from its traveling position, lowers the jack, and locks the hinged side braces in place by inserting the captive cotter pins. He does this for all four trailer jacks.

**1, 2, 3,** and **4** extend the jacks until the trailer wheels are off the ground and the trailer is approximately level. The jacks should be operated in pairs to avoid twisting of the trailer frame. If only one

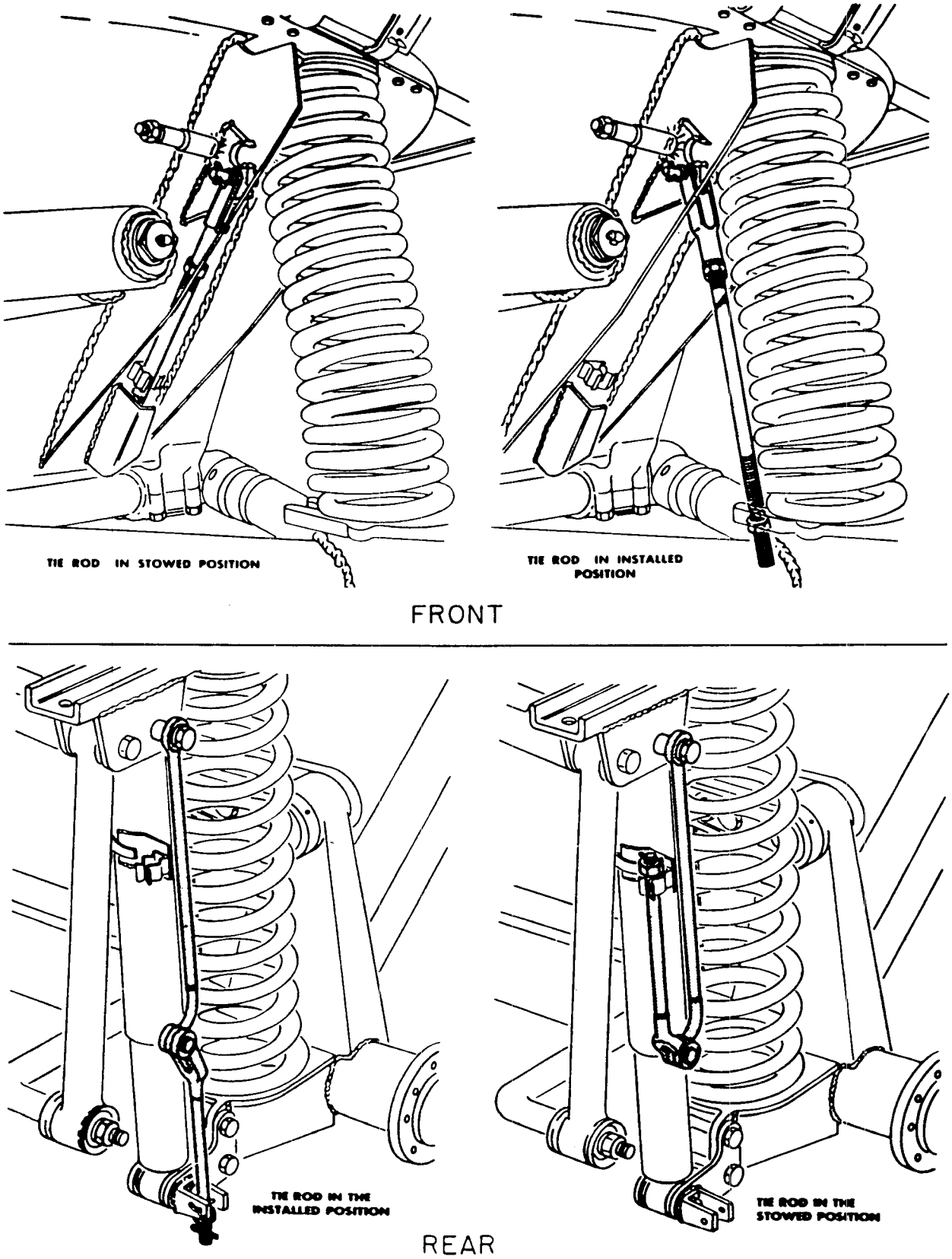


*Figure 202. Spring snubbers.*

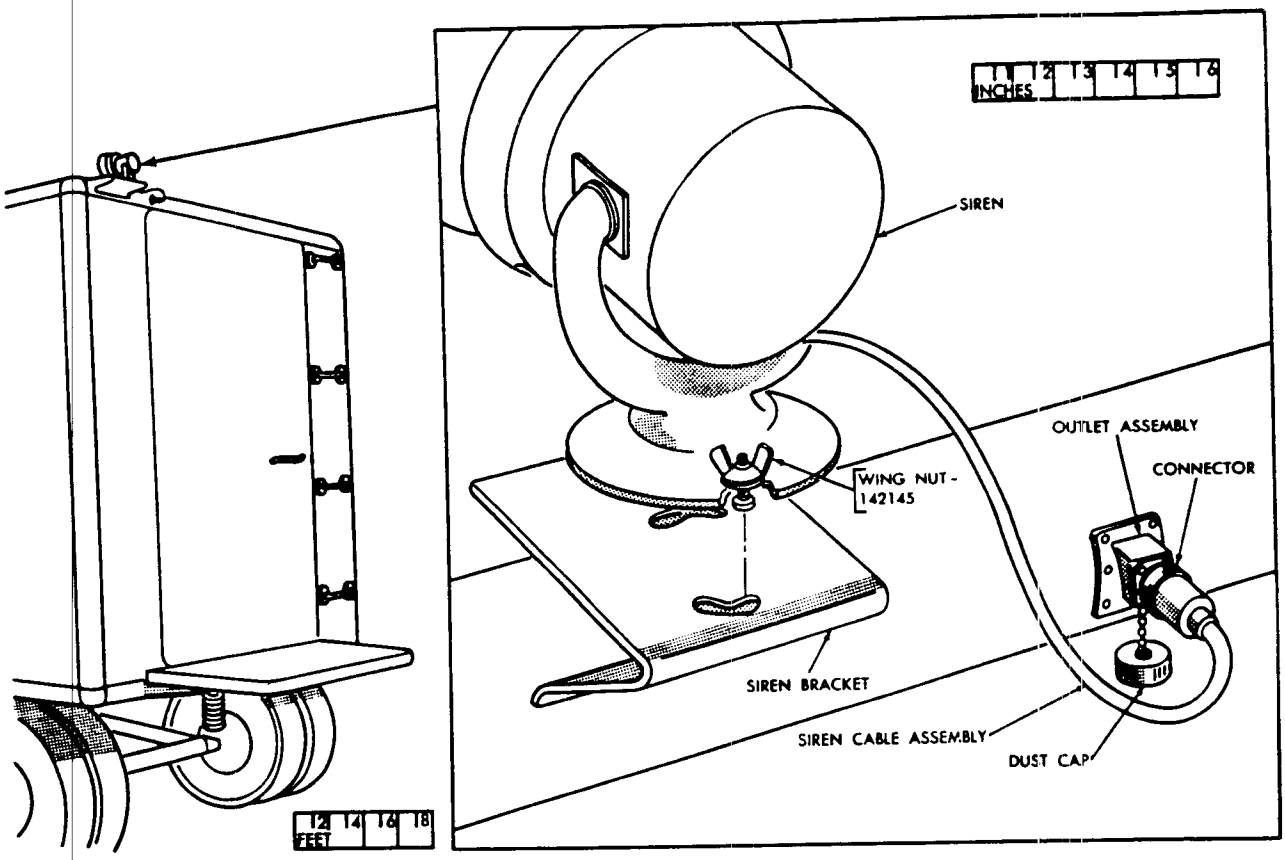


*Figure 203. Mounting siren.*

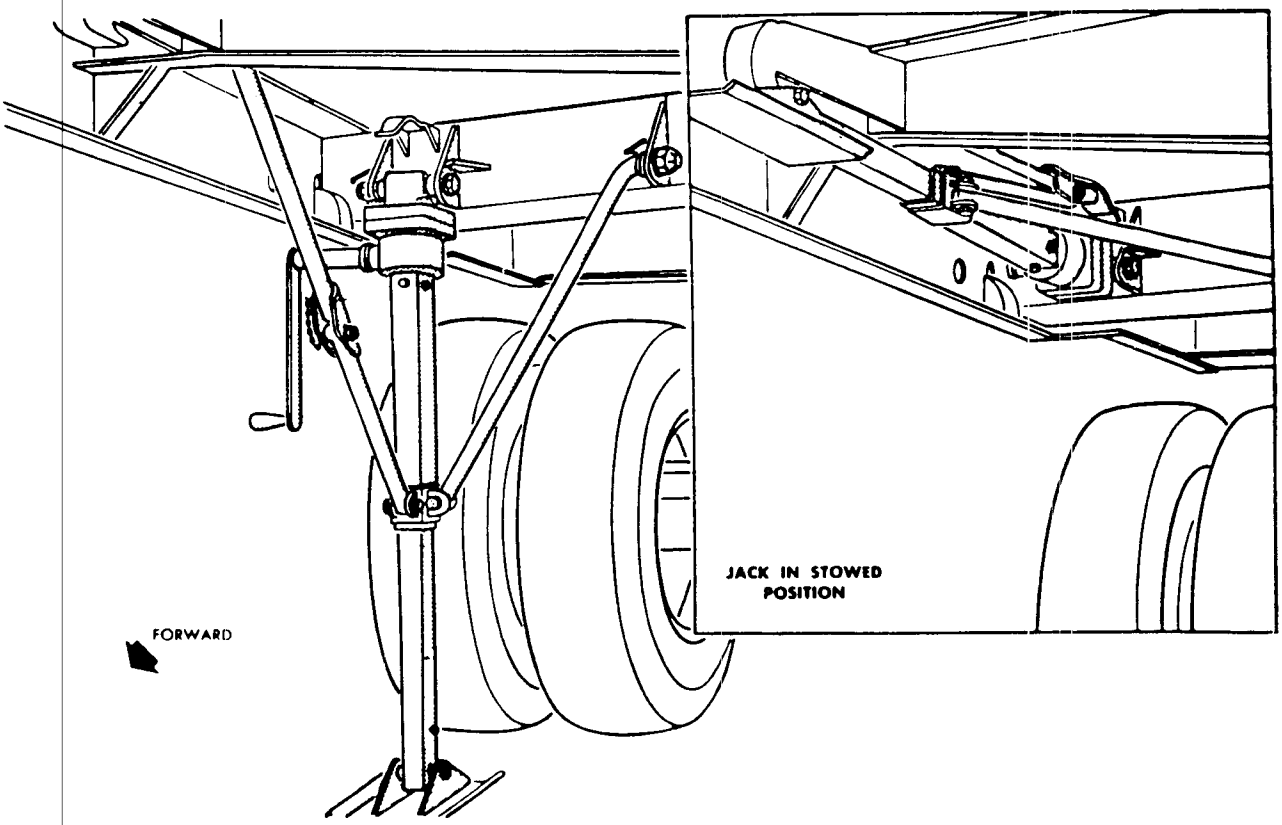


*Figure 204. Trailer jacks.*

crank is provided, obtain another from the maintenance and spares trailer or radar control trailer.

3 stores the jack cranks behind the rear bumper pad support.

*e. Preparing Automatic Plotting Boards (Battery Control Trailer Only).*

2 opens the window of the altitude plotting board by pushing the window release button, releases the pen arms, checks to see that the arms are properly released by sliding them along their rails, and closes the plotting board window.

4 releases the horizontal plotting board pen arms from the rear of the assembly. To do this, open the hinged assembly by releasing the slide lock and operating the left T-handled pull-release lever located underneath the shelf of the battery control console, release the pen arms, check to see that the arms are properly released by sliding them along their rails, and then close the hinged assembly.

2 opens the altitude plotting board hinged assembly by operating the right T-handled pull-release lever underneath the shelf of the battery control console, obtains the four plotting pens from cases, and closes the hinged assembly.

2 opens the altitude plotting board windows, installs the pens marked L and R on the appropriate arms, and closes the plotting board windows.

*f. Connecting Ground Rod* (fig. 205).

3 removes the ground rod from its supporting brackets at the forward end of the trailer and unwinds the cable, drives the ground rod into the ground at a distance from the trailer equal to at least one-half the cable length, and then fastens the cable to the terminal stud on the underside of the trailer. Figure 205 shows the ground rod installed for the launching control trailer. The ground rod on all trailers are the same but are installed in a different location. At the battery control trailer and radar control trailer, the ground rod cable is connected to the roadside.

## 401. Report

When each crew has completed the emplacement of its trailer, the CS commands FALL IN.

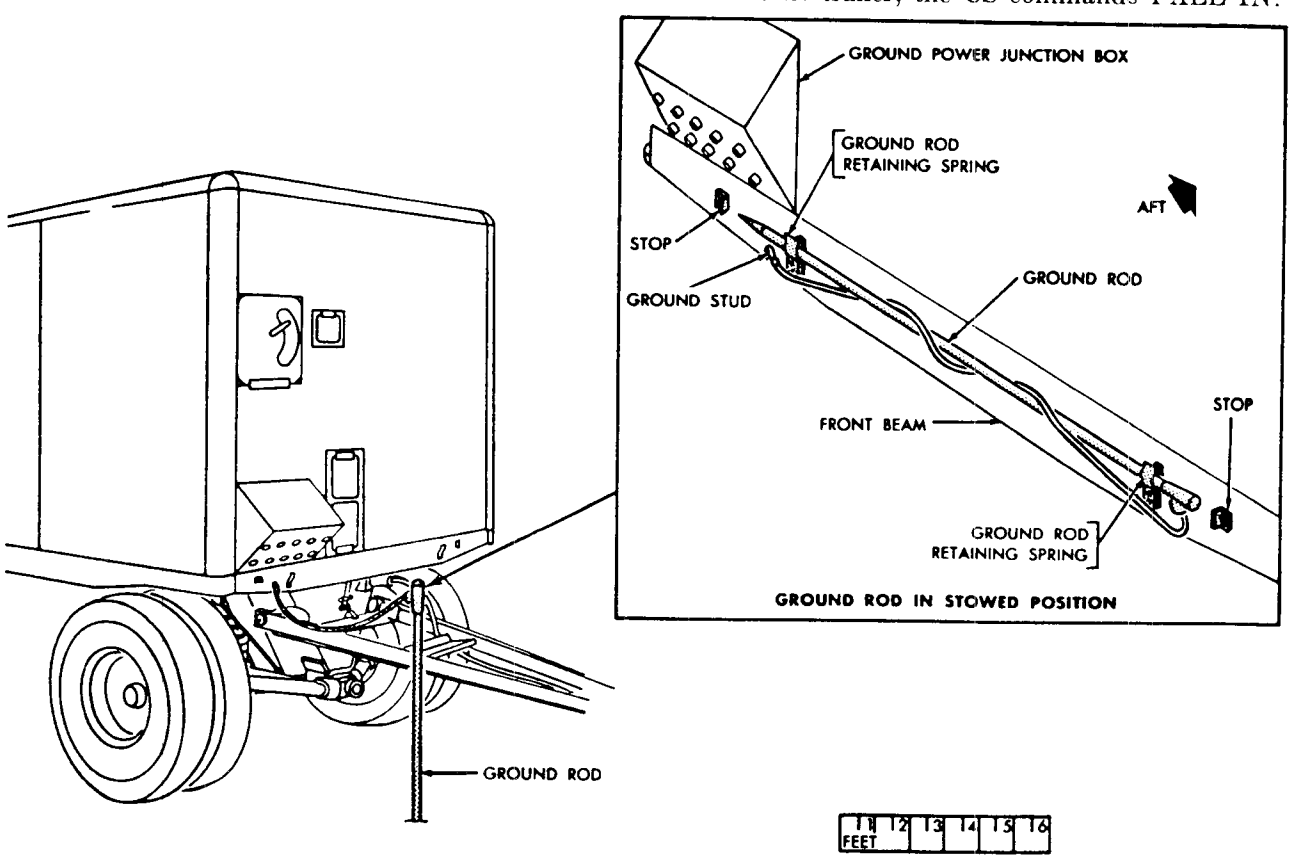


*Figure 205. Ground rod and cable.*

The crew being assembled, the CS commands REPORT. Drivers will not be present at this formation.

1 reports BATTERY CONTROL TRAILER EMPLACED.
2 no report.
3 no report.
4 no report.
1 reports RADAR CONTROL TRAILER EMPLACED.
2 no report.
3 no report.
4 no report.

## 402. March Order Personnel

This drill for march ordering the battery control and radar control trailers requires 1 NCO in charge (CS), 1 driver for each prime mover, and 4 men per trailer. See table XLIX for personnel and sequence. March order will be given only upon direction from the battery commander.

## 403. Fall In

To assemble the crew, the CS commands FALL IN.

1 through 8 (less drivers) fall in at the battery control trailer.

## 404. Count Off

The crew being assembled, the CS commands COUNT OFF.

1 through 4 report their numbers consecutively.
1 through 4 report their numbers consecutively.

## 405. Call Off

The crew being assembled, the CS commands CALL OFF.

1 reports COMPUTER OPERATOR.
2 reports COMPUTER OPERATOR.
3 reports COMPUTER OPERATOR.
4 reports ASSISTANT CHIEF OF SECTION.
1 reports RADAR OPERATOR.
2 reports RADAR OPERATOR.
3 reports RADAR OPERATOR.
4 reports RADAR OPERATOR.

## 406. March Order Drill

The crew being assembled, the CS commands MARCH ORDER TRAILERS.

*a. Removing Ground Rod.*

3 disconnects the ground rod cable from the terminal stud on the underside of the trailer, pulls up the ground rod, cleans the rod and the cable, and winds up the cable. He then fastens the ground rod to its supporting brackets at the forward end of the trailer.
4 and CS assist as needed.

*b. Preparing Automatic Plotting Boards (Battery Control Trailer Only).*

2 opens the windows of the horizontal and altitude plotting boards and removes the four plotting pens from the plotting arms. He then opens the hinged altitude plotting board assembly by operating the right-hand T-handled pull-release lever underneath the shelf of the battery control console, stores the pens in the pen cases, and closes the hinged assembly.
2 opens the altitude plotting board window, locks the arms, and closes the window.
2 opens the horizontal plotting board assembly by operating the left-hand pull-release lever, locks the pen arms in their traveling position, and closes the hinged assembly.

*c. Preparing Trailer.*

1 obtains the jack cranks from behind the rear bumper pad support.
1 and 4 retract the jacks until they are fully retracted. Operate the jacks in pairs to avoid twisting the trailer frame.
1 and 4 remove and store the hinged side braces on the jack assemblies, and raise and fasten each jack into its traveling position on the underside of the trailer.
3 disconnects the siren cable, removes the siren from its bracket on the rear curbside corner of the trailer roof, replaces the chained connector cap on the siren power connector, and stores the siren in the trailer.
1 closes and locks the escape hatches, equipment-cooling intake and exhaust, personnel air intake, and the rear door air-exhaust ventilator.
2 fastens the swivel chairs in their traveling position with the tiedown mechanisms.
3 and 4 remove the stairs from the platform, fasten them to the inside of the trailer door, and close and lock the trailer door.
1 and 2 raise the platform and lock it in the traveling position.
1 fastens the folding step in its traveling position.

**D** backs the prime mover into position under the direction of **CS**.

**1, 2, 3,** and **4** detach the spring snubbers from the front and rear undercarriages and fasten the snubbers in their traveling position.

**1** and **2** couple the trailer to the prime mover.

**1** connects the emergency switch operating chain and the two safety chains on the trailer towbar to the prime mover.

**1** connects the intervehicular cable (air hoses on later models of the trailer) to the prime mover.

**2, 3,** and **4** remove the chocks from behind the trailer wheels and store them in their traveling position on the underside of the trailer.

**1** releases the rear-wheel parking brake and checks to insure that the brakes are completely released.

### 407. Report

After the battery control and radar control trailers are march ordered, the **CS** commands FALL IN. The crews fall in at the battery control trailer. CS then commands REPORT.

**D** reports PRIME MOVER READY.
**1** reports SAFETY CHAINS AND CABLES READY.
**2** reports JACKS UP AND SECURED.
**3** reports CHOCKS STORED.
**4** reports TRAILER READY.
**D** reports PRIME MOVER READY.
**1** reports SAFETY CHAINS AND CABLES READY.
**2** reports JACKS UP AND SECURED.
**3** reports CHOCKS STORED.
**4** reports TRAILER READY.
**D's** then tow the trailers to the designated area.

## Section IV. MISSILE-TRACKING RADAR, TARGET-TRACKING RADAR, AND RADAR COLLIMATION MAST ASSEMBLY

### 408. General

The drill for the emplacement and march order of the missile-tracking radars is the same. Therefore both are included in this section. Prior to the emplacement, both sites must be well prepared due to the necessity for the radars remaining level at all times. When emplacing the tracking radars, the ground upon which the trailers are placed must be leveled a sufficient amount to prevent any part of the tripod mount from leaning against any part of the trailer bed after the mount is leveled.

### 409. Sequence

This drill for emplacing the tracking radars is based upon the use of 1 NCO in charge of both radars (CS), and 1 driver and 3 men for each of the 2 tracking radars. See table XLIX for the responsible section and the sequence of events. It should be noted that **1, 2,** and **3** emplace the target-tracking radar while **4, 5,** and **6** emplace the missile-tracking radar. **4, 5,** and **6** perform the same jobs as **1, 2,** and **3** in the following drill.

**7** and **8**, assisted by the drivers, unload the radar collimation mast assembly. **7** and **8** then return to the radar emplacement sites and assist as needed and the drivers drive to the battery control area and report to the communication sergeant. If sufficient personnel are available, a separate team should be formed to start emplacing the collimation mast assembly immediately.

### 410. Fall In

To assemble the crew, the **CS** commands FALL IN. The crew falls in at the radar control trailer.

### 411. Count Off

The crew being assembled, the **CS** commands COUNT OFF.

**D** reports DRIVER.
**1** through **8** report their numbers in consecutive order.

### 412. Call Off

The crew being assembled, the **CS** commands CALL OFF.

**D** reports DRIVER.
**1** reports MISSILE RADAR OPERATOR.
**2** reports MISSILE RADAR OPERATOR.
**3** reports TARGET RADAR OPERATOR.
**D** reports DRIVER.
**4** reports TARGET RADAR OPERATOR.
**5** reports TARGET RADAR OPERATOR.
**6** reports TARGET RADAR OPERATOR.
**7** reports TARGET RADAR OPERATOR.
**8** reports TARGET RADAR OPERATOR.

## 413. Emplace Radars

The crew being in formation, the **CS** commands EMPLACE RADARS.

*a. Unloading Collimation Mast.*

**7** and **8** proceed to the site designated for emplacing the radar collimation mast assembly, unload the assembly, and then return to the emplacement sites. The drivers assist in the unloading.

*b. Setting Tracking Antenna Trailer in Position.*

**D,** under the direction of the **CS,** tows the antenna trailer to the exact location designated for emplacement.

**1** sets the rear-wheel parking brake.

**2** and **3** remove the chocks from the underside of the trailer and place one chock behind each trailer wheel (fig. 206).

**1** disconnects the emergency switch operating chain and the two safety chains on the trailer towbar from the prime mover.

**1** disconnects the intervehicular cable from the socket at the prime mover and wraps the cable around the towbar and away from the ground.

**All men** disconnect the trailer from the prime mover.

**D** drives the prime mover to the battery control trailer and reports to the communication sergeant.

**2** and **3** unclamp the four snubbers on the front and rear undercarriages of the trailer, place the snubbers in the yokes, and take up on the nut until the nut engages the bottom of the yoke.

*c. Preparing Antenna Assembly.*

**1** obtains the wrenches from the storage compartment in the curbside equipment inclosure, removes the 2 protective covers from the vent openings on the roadside of the equipment inclosure, and removes the 3 covers which protect the flat machined portion of the leg assembly mounting surfaces on the equipment inclosure.

**1, 2,** and **3,** assisted by **7** and **8,** uncover and unbolt the 3 leg assemblies mounted on the forward deck of the trailer.

**1, 2,** and **3** assisted by **7** and **8,** remove the leg assemblies and attach each leg to the

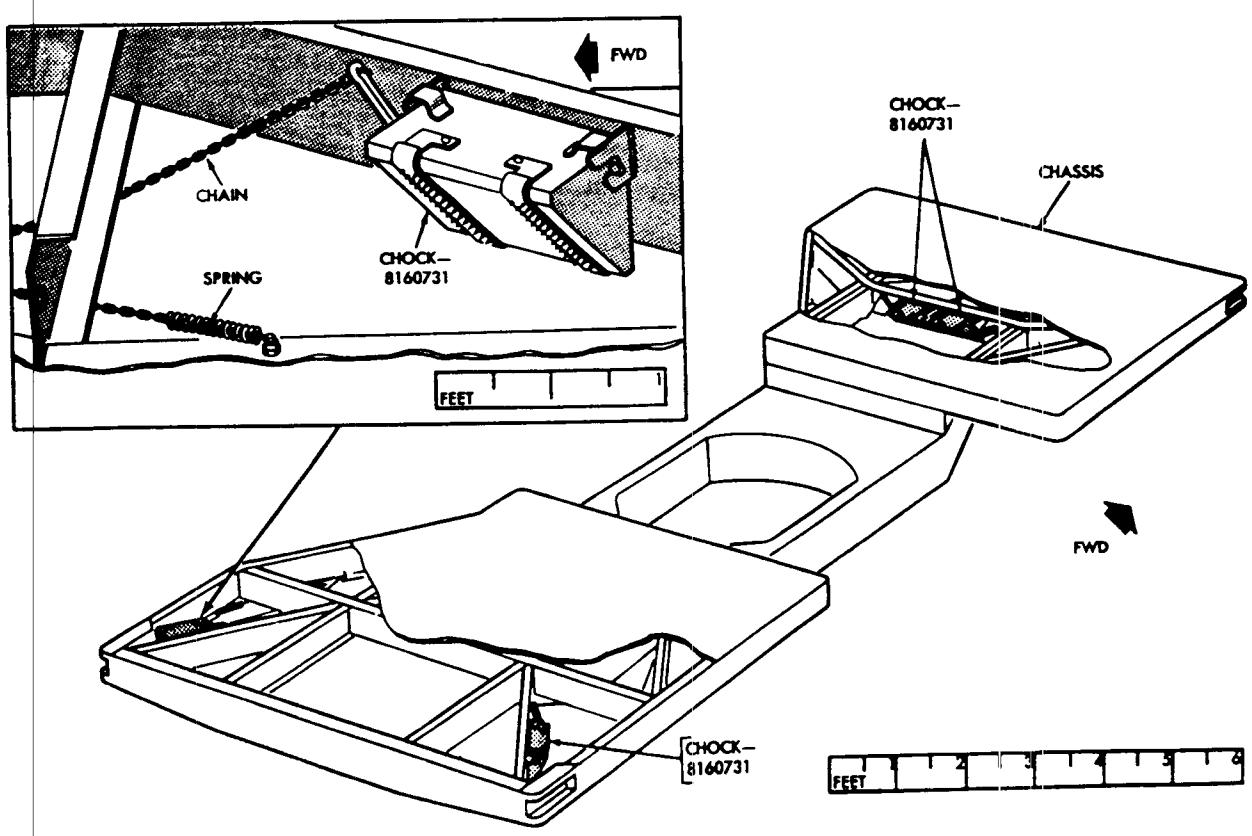


*Figure 206. Chocks stowed.*

mounting surface by inserting the hook on the leg assembly into the slot on the mounting surface and tightening the mounting bolts.

***Caution:*** Each leg assembly weighs approximately 200 pound. **1, 2,** and **3** bolt the three covers removed from the flat machined portion of the leg assemblies to the forward deck where the leg assemblies are stored when in transit.

**2** and **3** loosen the jackpad holddown covers on the front trailer deck, remove the 3 jackpads, and place the pads under the jacks.

**2** and **3** loosen the 2 locking hand nuts on each jack and strike each nut against the jack to release the locking mechanism, place a protective boot around each jack and extend the jacks until they engage the jack pads.

**1** unclamps and fastens the folding stairs to the trailer bed.

**1** loosens and removes the protective canvas covers from the antenna trunnion assembly and the tracking lens, folds the covers, and stores them in a convenient location.

**1, 2,** and **3** release the 3 trunk-type latches which secure the tracking lens to the rear trailer deck, place the tracking lens on its mounting on the rf unit, and fasten the lens by tightening the 12 captive bolts. Insert the stud on the lens assembly into the hole in the bracket for proper alinement.

**3** releases the azimuth lock (fig. 206) which secures the turntable assembly in its transit position. To do this, loosen the bolt and pull back on the slotted key bolt to release the lock. Then retighten the bolt so that the key bolt cannot be accidently placed in the locked position. Manually rotate the antenna to insure it is free.

**3** releases the elevation lock (fig. 207) which secures the rf unit in its transit position. To do this, pull out on the spring-loaded hand nut and turn it 180° in either direction. Make sure the keys are properly seated in the key slots. Manually rotate the rf unit to insure it is free.

**1** and **2** unscrew and store the three trunk-type latch assemblies from the rear trailer deck.

**1** loosens the four bolts which secure the antenna assembly to the shock jabsorbers on the trailer (fig. 207).

**1, 2,** and **3** obtain the three jack cranks from the storage compartment, center the jackpads, and then simultaneously, under the direction of the CS, extend the jacks until the antenna assembly is raised approximately 1½ inches off the trailer bed and is approximately level.

**1** and **2** check all connections to make sure they are properly tightened.

**3** collects the tools and loose bolts and stores them in the storage compartment.

## 414. Report

As soon as each crew has completed the emplacement, the **CS** commands FALL IN. The crew falls in at the radar control trailer. **CS** then commands REPORT.

**1** reports MTR JACKS EXTENDED.
**2** reports MTR ANTENNA SECURED.
**3** reports MTR AZIMUTH AND ELEVATION LOCKS RELEASED.
**4** reports TTR JACKS EXTENDED.
**5** reports TTR ANTENNA SECURED.
**6** reports TTR AZIMUTH AND ELEVATION LOCKS RELEASED.
**7** reports COLLIMATION MAST UNLOADED.
**8** reports ALL TOOLS COLLECTED AND STORED.

## 415. Collimation Mast

*a. Crews.* If sufficient personnel are available, a separate crew should be formed from personnel not utilized in table XLIX to emplace the collimation mast assembly. This crew should commence operations as quickly as possible, and need not await the completion of the emplacement of any other equipment in the battery control area. If a separate crew cannot be formed, the crews responsible for emplacing the two tracking radars will emplace the collimation mast assembly.

*b. Mast Area Layout.* Refer to figures 208 and 209.

(1) All anchor rods and anchor plate holes should be determined with respect to the center stake, which is the predetermined location of the mast base plate.

(2) The guy wire winch anchor rods 1, 2, 3, and 4, in figure 208 are each located 60 feet from the center stake and at 90° angles.

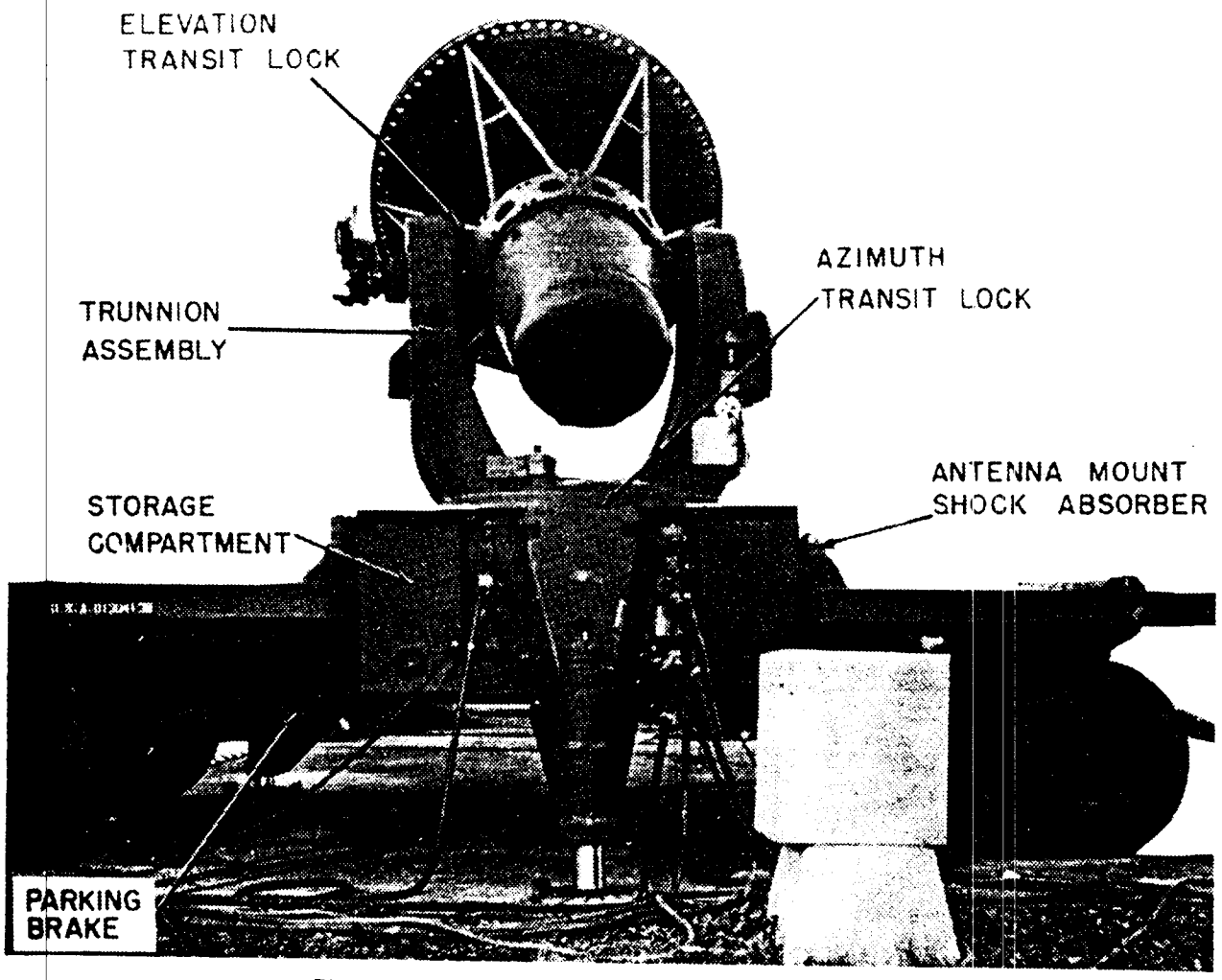


*Figure 207. Azimuth and elevation locks and shock absorbers.*

(3) Anchor rods 1 and 3 should be alined in the direction in which the mast is to be assembled and erected.

(4) The side anchor rods 2 and 4 should be located on a line that is perpendicular to the line joining anchor rods 3 and 1.

(5) The hoist anchor rod 5 should be located 22 feet from the center stake in line with anchor rods 1 and 3, and in the direction opposite to the mast when it is laid out on the ground for assembly as shown in figure 208.

(6) Each anchor plate hole should be 4 feet 3 inches behind its anchor rod with respect to the center stake.

(7) These distances may be determined by using the locating cable (fig. 208). The locating cable has seven loops which, when the cable is used properly, enable the crew to quickly and accurately determine the locations of the anchor rods and anchor plate holes.

(8) The anchor rods are driven into the ground at an angle of 45° from the horizontal and so that they will enter the anchor plate hole near the bottom (fig. 209).

(9) Each anchor rod should be driven into the ground until approximately 3 to 6 inches project above the ground.

(10) When the mast is to be erected on a slope, it will be assembled on the uphill side to insure that the winch with the largest cable will be used to maximum advantage.

*c. Fall In.* As soon as the CS is ready to proceed with the emplacement of the collimation mast, he commands FALL IN.

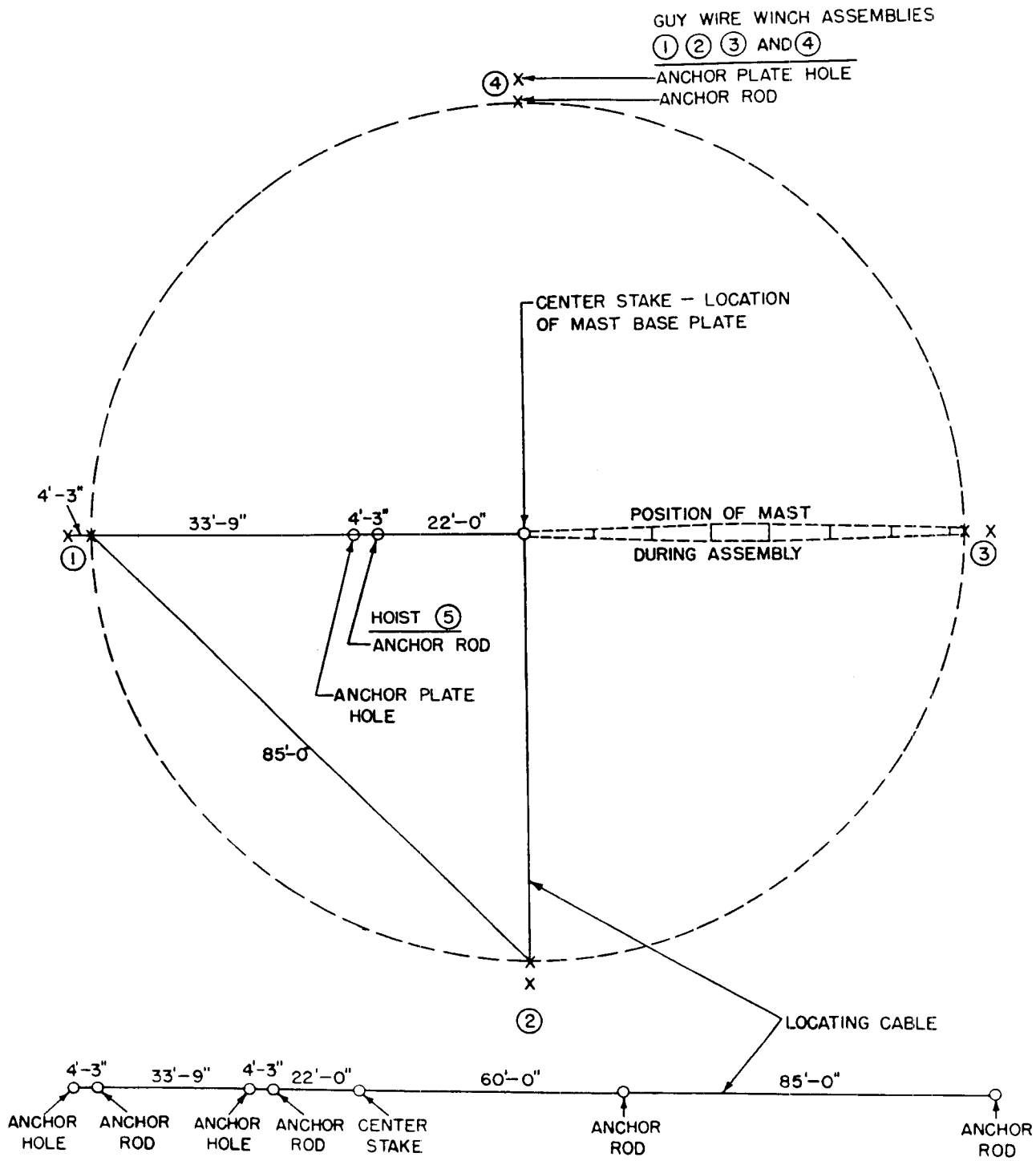


*Figure 208. Anchor rod and plate hole locations.*

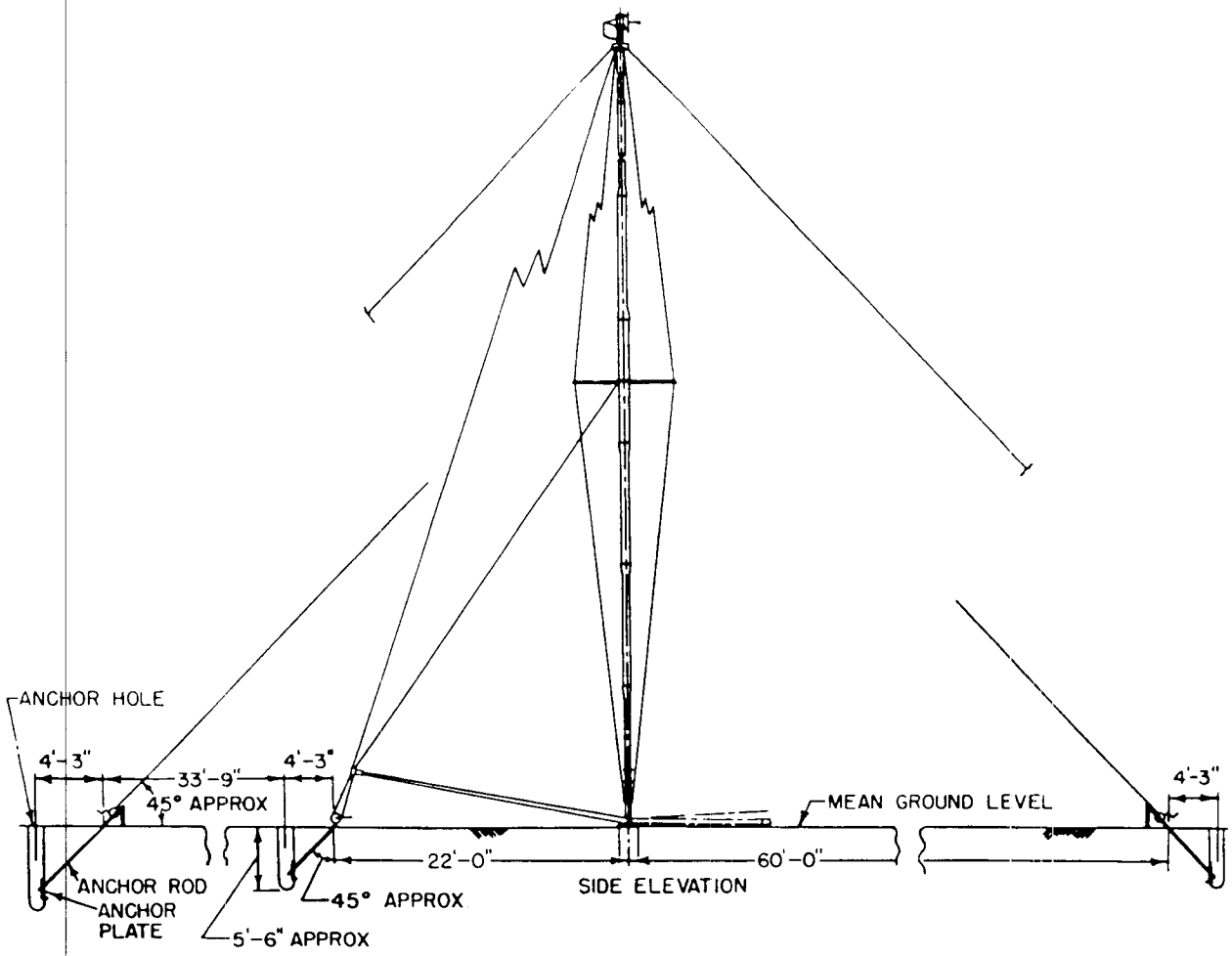


*Figure 209. Collimation mast.*

The crew falls in at the site designated for the emplacement of the mast assembly.

*d. Count Off.* The crew being assembled, **CS** commands COUNT OFF.

**1** through **8** report their numbers in consecutive order.

*e. Emplace Mast.* The crew being assembled, **CS** commands EMPLACE MAST.

## 416. Emplacing Collimation Mast

*a. Determining Location of Anchor Rods, etc.* (fig. 208).

**CS** marks the exact spot where the base plate is to be located.

**1**, **2**, and **3** remove the locating cable from its box.

**1**, **2**, and **3**, using the locating cable, stake out the location of the four guy wire winch anchor rods and anchor plate holes and the location of the hoist anchor rod and anchor rod hole as follows:

**1**, **2**, and **3** form a 45° triangle with the locating cable. **1** places the loop at the apex of the triangle over the center stake. **2** and **3** stretch the cable until it is taut and drive stakes at the location of the anchor rod and anchor plate hole for guy wire winches 1 and 2 and the hoist 5. The seven loops on the locating cable indicate the location of the stakes. **1**, **2**, and **3** then determine the location of the anchor rods and anchor plate holes for guy wire winches 3 and 4 by rotating the right triangle formed by the locating cable about the center stake at 90° intervals, using a previously determined anchor rod location as a reference.

**1** and **2** obtain the digging implements from the storage cases and dig the anchor plate holes at the designated locations, if not previously prepared.

**3** and **4** obtain 5 anchor rods and 5 anchor plates. They drive each anchor rod into the ground at a 45° angle with the top pointing toward the center stake, fasten the

anchor plate to the anchor rod (fig. 210), and assist **1** and **2** in filling the anchor plate holes after the anchor plates have been installed and the rods connected to the anchor plates.

Before filling the anchor plate holes, make certain each anchor plate is correctly positioned and engaged to the anchor rod. Be careful not to detach the plates when tamping the soil.

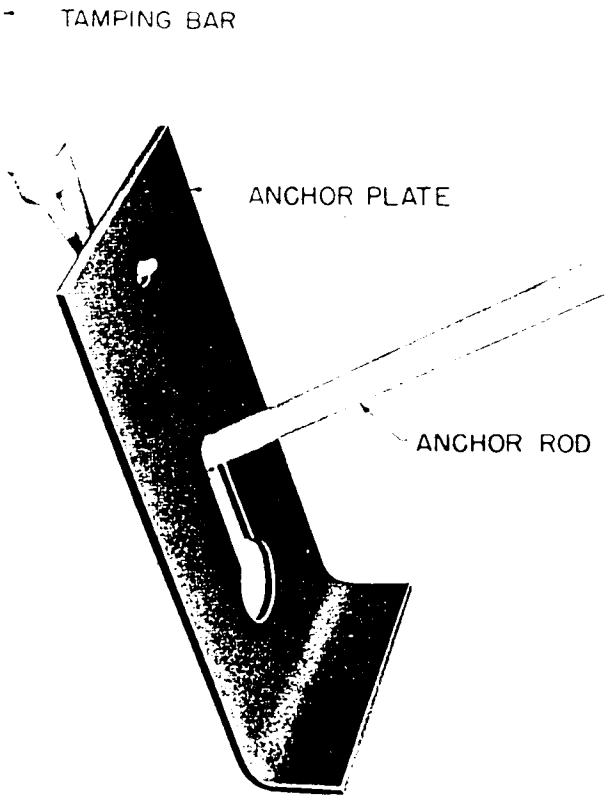


*Figure 210. Attaching anchor plate to anchor rod.*

*b. Installing the Mast Base Assembly* (fig. 211).

While **1**, **2**, **3**, and **4** are installing the anchor rods and the anchor plates, **5** and **6** get the mast base and stakes from their storage box and carry them to the center stake location.

**5** and **6** place the base plate over the center stake location and aline it so that one of the base plate center lines is alined with anchor rods 1 and 3. This is necessary to prevent the bottom of the mast section from resting on the cleats when the bottom mast section is installed on the yoke assembly prior to raising the mast.

The mast base plate assembly is a dual-purpose plate and can be installed in two distinct ways. If installed on soft ground, the base plate is installed with the cleats down, and cleats are driven into the ground before it is permanently staked down. When it is installed on hard ground, the plate is emplaced with the cleats up. In either case, the plate must be mounted on level ground that will not sink appreciably when the mast is erected. The saddle clamps are always mounted on top of the

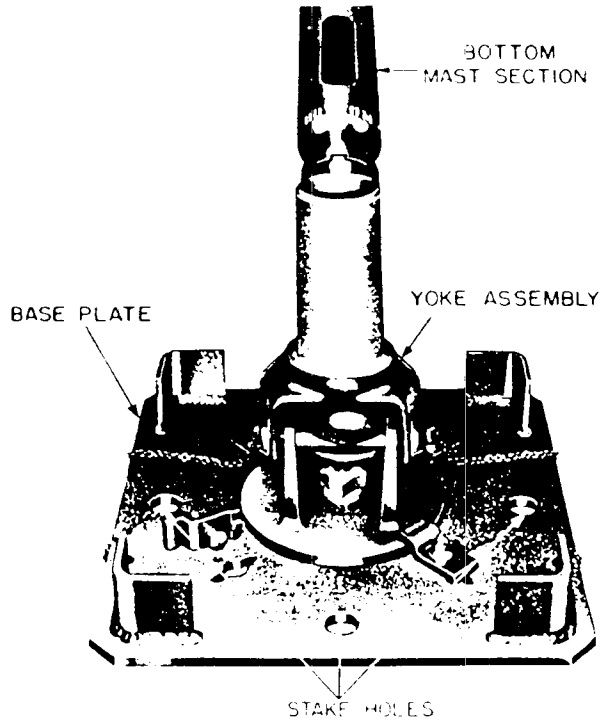


*Figure 211. Mast base plate assembly.*

base plate. These clamps are removed by unscrewing the mounting bolts.

After the base plate has been positioned, **5** and **6** remove the yoke assembly, drive the stakes into the base plate, and reinstall the yoke assembly. The yoke assembly is removed to prevent possible damage during the driving of the ground stakes.

After the stakes are driven into the ground, **5** and **6** reinstall the yoke assembly and position the yoke so that it is pointing toward the hoist anchor rod.

*c. Assembling Mast and Waveguide Sections.*

While **5** and **6** are installing the mast base

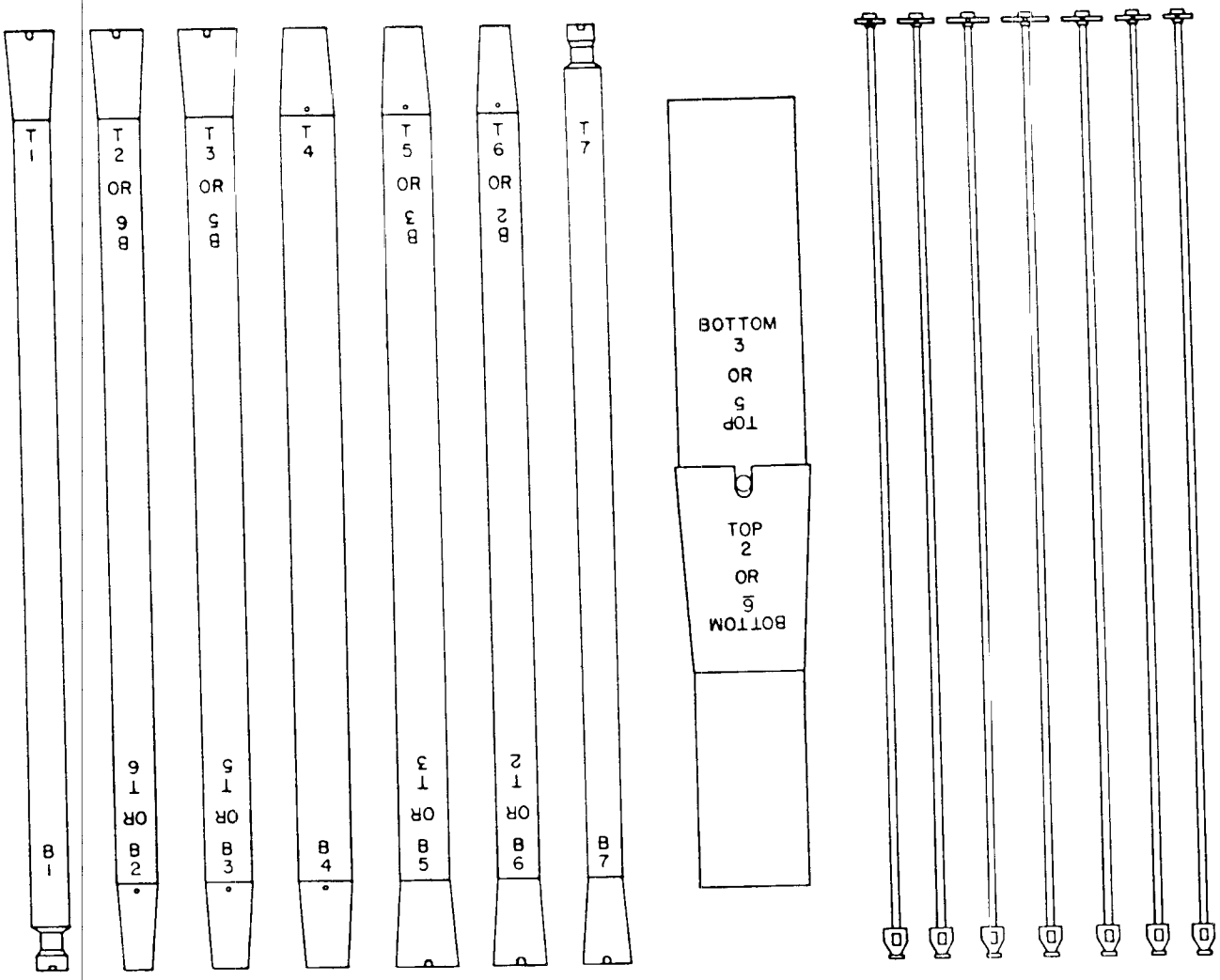


*Figure 212. Waveguide and mast sections.*

plate and the yoke assembly, 7 and 8 remove the 7 mast sections and the 7 waveguide sections from their carrying cases and lay them down in the order in which they are to be assembled. Each section is marked with a number and the words TOP and BOTTOM to insure proper arrangement (fig. 212).

5 and 6 slip the stay wire fastener over the slotted end of the bottom mast section so that the adjusted assemblies are facing the top of the mast and the key is properly engaged in the keyway (fig. 213).

5 and 6 insert the bottom mast section on the yoke assembly on the base plate (fig. 211), and rotate the yoke so that the slotted waveguide opening is on the top.

7 and 8 insert the bottom waveguide section into the bottom mast section. Aline the coupling block part of the waveguide section so that the flexible waveguide to the radar rf test set can be connected (fig. 214). This coupling block is not permanently fastened to the mast housing, but merely

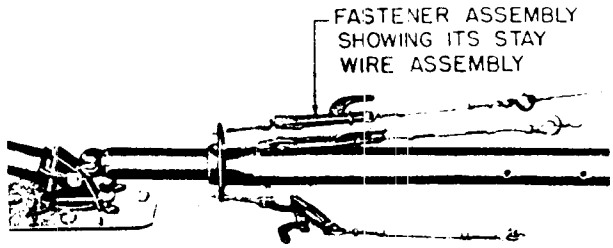


*Figure 213. Stay wire fastener assembly.*

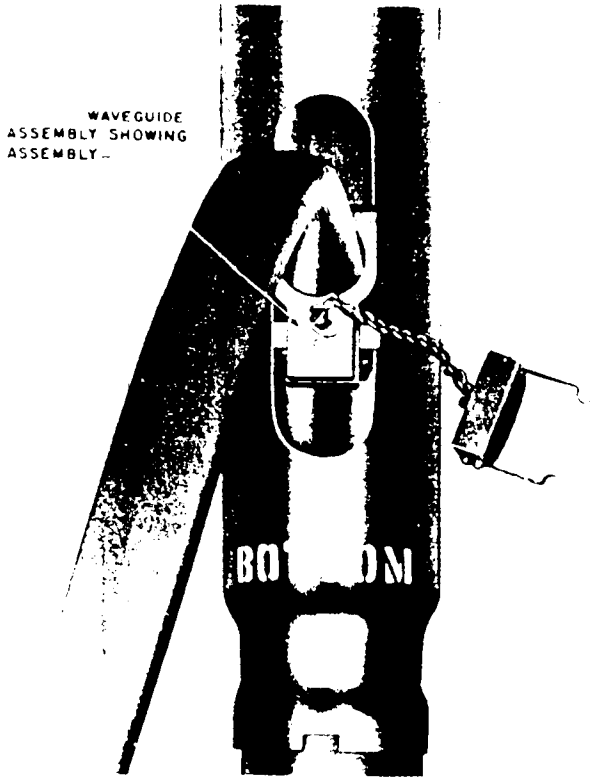


*Figure 214. Flexible waveguide connection to radar rf test set.*

slides into place and can be easily moved within the slotted opening for adjustment of the flexible waveguide to the test set.

**7** and **8** fasten the second waveguide section to the first waveguide section. The waveguide sections are fastened together by two snap fasteners which engage the corresponding waveguide section (fig. 215). When the sections are fastened together, the choke flange portion matches the plane flange. They are correctly positioned when the guide insert pins engage the holes on the flange end. Spacers attached to the waveguide section position the section within the assembly.

**5** and **6** slide the second mast section over the second waveguide section and join the two mast sections together (fig. 212).

**5, 6, 7,** and **8** continue assembling the mast by joining the waveguide and mast sections together until they have completed the center mast section.

When the center mast section is assembled,

**5** and **6** install the crossarm assembly on the center mast section. Mount the crossarm assembly so that the arms are folded against the mast and pointing toward the base plate. Then aline the holes in the crossarm assembly with the tapped holes in the center mast section so that the large hole in the assembly collar, to which the lifting cable is attached, is on the top. This will be accomplished when the two arrows embedded on the section are alined. Fasten the crossarm assembly in place by inserting the four bolts stored in a small bag attached to the crossarm assembly.

**5** and **6** unfold the TWO UPPER ARMS ONLY.

**5, 6, 7,** and **8** continue to assemble the mast and waveguide sections until all seven sections have been assembled. In assembling the mast sections, make sure that the sections are locked in place by noting that the slots engage the keys in the opposite sections as shown in figure 212. If the sections are not properly engaged, it may be necessary to remove the coupling block on the bottom mast section from its slotted hole and let the casting ride back into the mast section. When the guy wires are all assembled and pressure is placed on the mast during erection, the sections will be forced into position by the pressure on the mast sections. The coupling block can then be reassembled.

*d. Assembling Boom, Guy, and Hoist.*

**7** and **8** slip the wire guide assembly on the top mast section so that the shackles and lugs face toward the base plate (fig. 216).

**7** and **8** rotate the wire guide assembly so that the inner shackle to which the lifting cable is attached is on top, and engage the key on the assembly casting on the keyway on the mast section. Do not tamper with the four screws which surround the assembly.

**7** and **8** secure the coupling block on the top waveguide assembly to the mast section by means of the captive bolts attached to the waveguide assembly (fig. 216).

**5** and **6** assemble the center boom section to the bottom boom section, and the top section to the center section.

**5** and **6** attach the cable hanger to the top boom section so that the lifting cable shackles are on top (fig. 217).

**5, 6, 7,** and **8** uncoil the four stay wires so that they have no kinks, are free from

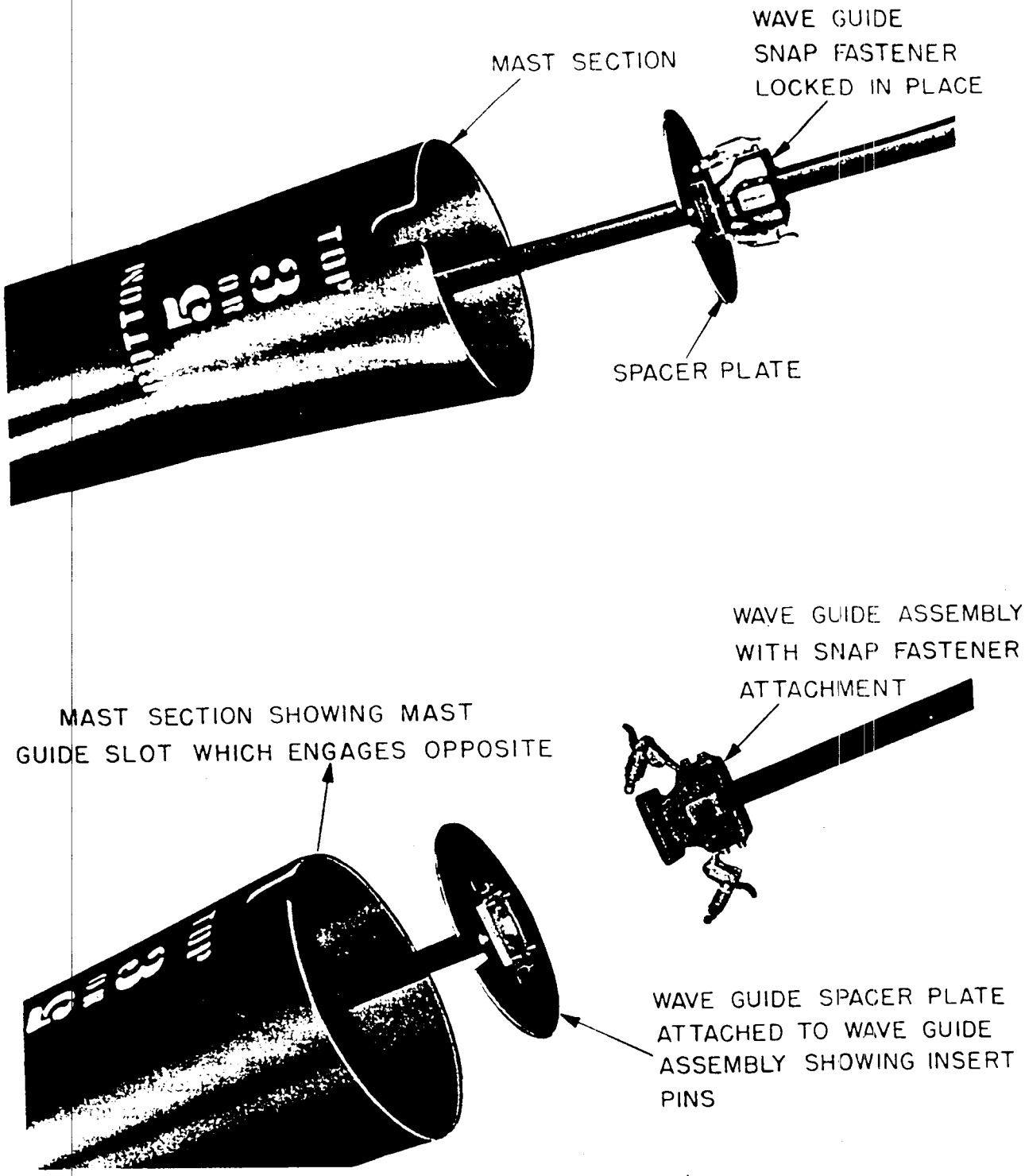


*Figure 215. Waveguide section connections.*

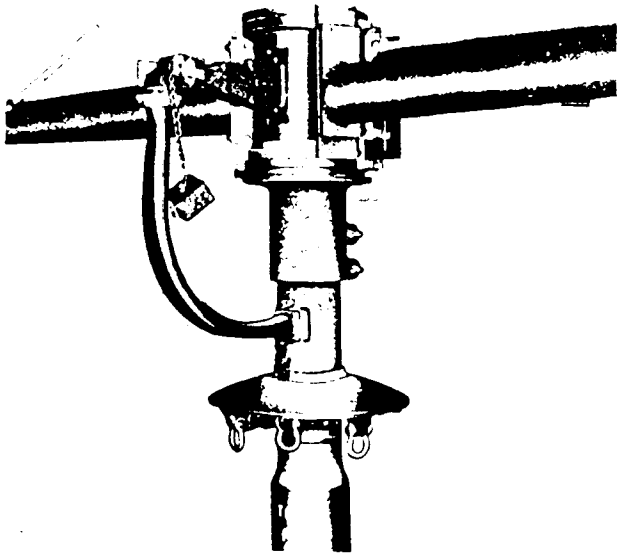

*Figure 216. Coupling block attached to top waveguide section.*

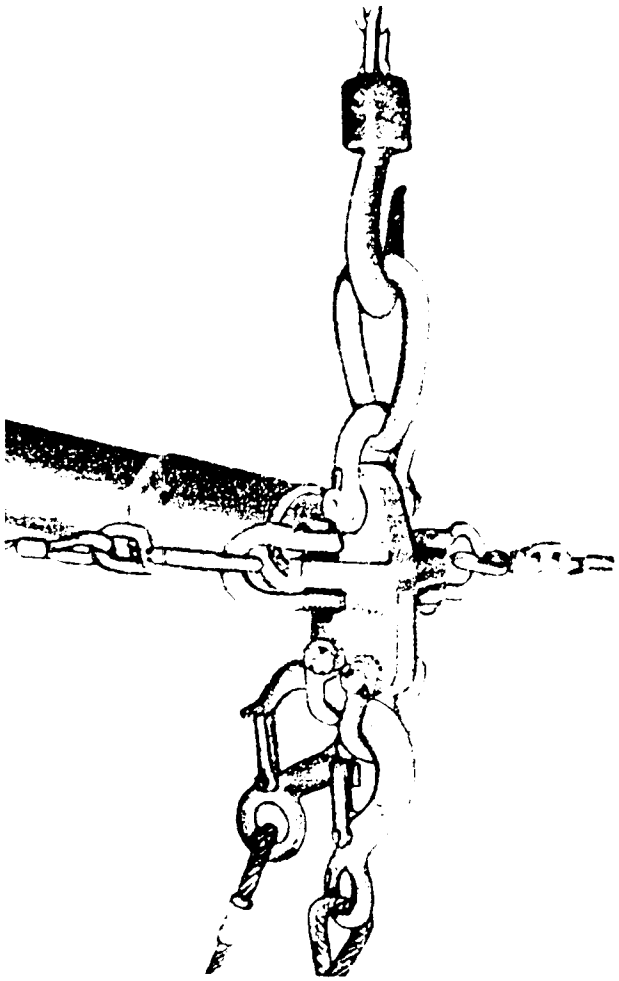

*Figure 217. Cable hanger installed.*

entanglement, the terminal connections are facing the top of the mast, and the thimbles the bottom. Fasten the terminal connections to the double lugs on the wire guide assembly at the top of the mast (fig. 218). Engage the swage on the two upper stay wires in the swage felting on the end of the two upper crossarms (fig. 218), and then connect the thimble ends of the two upper stay wires to the hooks on the stay wire fastener assembly at the bottom of the mast (fig. 213). Leave the adjuster arms on the fastener assembly in a slack position. The two lower stay wires cannot be assembled until the mast has been raised sufficiently to allow the lower crossarms to be unfolded.

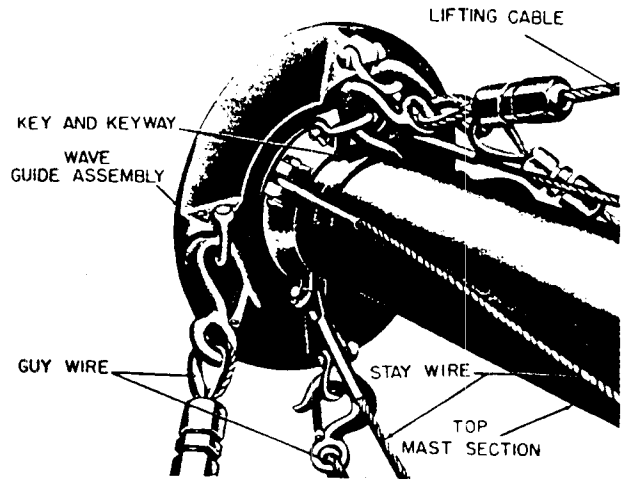


*Figure 218. Installing lifting cable to wire guide assembly.*

**1** and **2** attach the boom hoist to anchor rod No. 5, and connect the hoist chain to the lower pear-shaped shackle on the boom cable hanger (fig. 217).

**3** and **4** attach the snaphook on each side cable to either side of the cable hanger (fig. 217). These cables have a snaphook at one end and a slotted plate clamp at the other end.

**3** and **4** uncoil each cable and place the slotted plate clamp of one cable near anchor rod No. 4, and the other cable near anchor rod No. 2. These slotted plate clamps will be connected to the guy wire winch assemblies at anchor rods 2 and 4 after the mast guy wires have been unreeled.



Picture UP SIDE DOWN

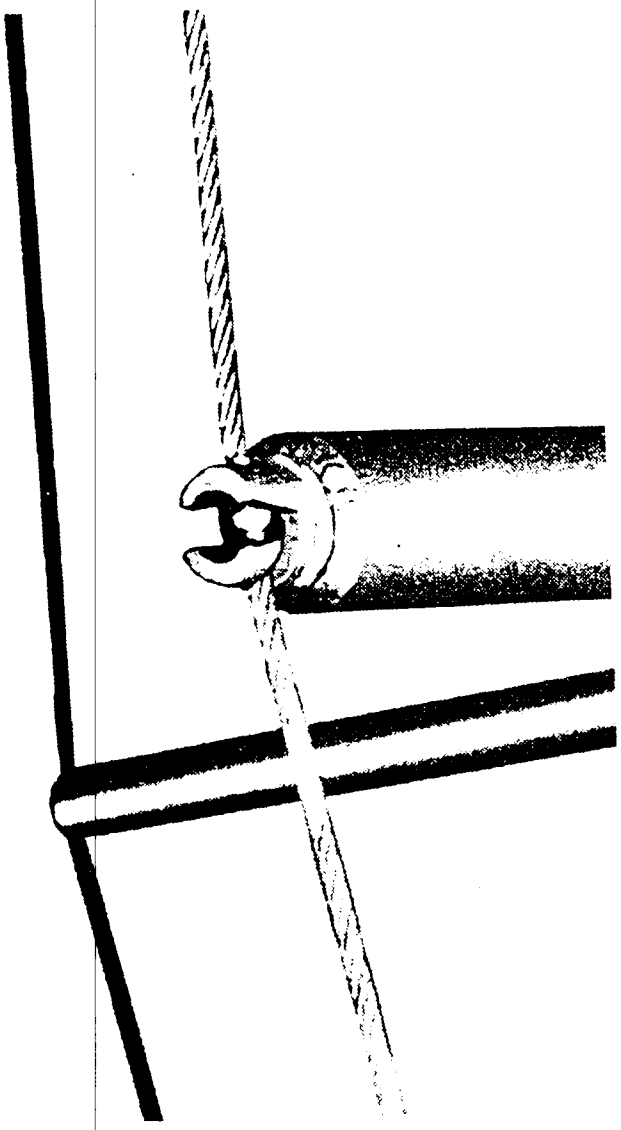

*Figure 219. Stay wire connection to crossarm assembly.*

**1, 2, 3,** and **4,** while **5, 6, 7,** and **8,** are completing the mast and boom assembly, obtain the four guy wire winch assemblies and install them on their anchor rods. The winch labeled 140 feet of wire is connected to anchor rod No. 1 is the one directly behind the hoist.

**1, 2, 3,** and **4** unreel the guy wires from the winch assemblies and connect them to the outer shackles on the wire guide assembly at the top of the mast (fig. 218).

As soon as the guy wires have been properly connected, **3** and **4** fasten the two plate clamps from the boom hoist to the number 2 and 4 guy wire winch assemblies and take up the slack handtight. The guy wire winch assemblies may be rapidly unreeled by hand by disengaging the two pawls from the drive ratchet and releasing the pawl on the brake ratchet. The two pawls on the drive ratchet can be kept disengaged by using the small clips stored in the bag attached to the winch assembly. To insert the clips, turn the winch crank slowly so that each pawl becomes available. As the pawls near the high point of the ratchet, insert a screwdriver or wrench handle under the pawl and compress it against the spring so that the small U-shaped clip can be installed on the pawl and bracket (fig. 220). Remove the clips after the guy wire has been sufficiently unreeled.

**5** and **6** attach the two lifting cables to the upper shackles on the boom cable hanger (fig. 218). The turnbuckle end of the short lifting cable fastens to the mast.

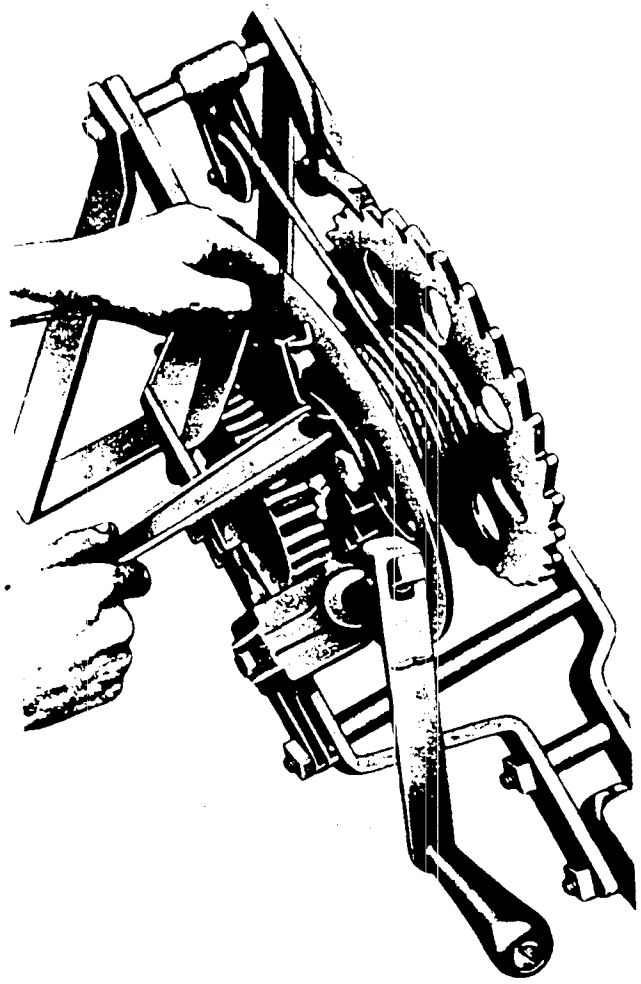

*Figure 220. Installing clips on guy wire winch assembly.*

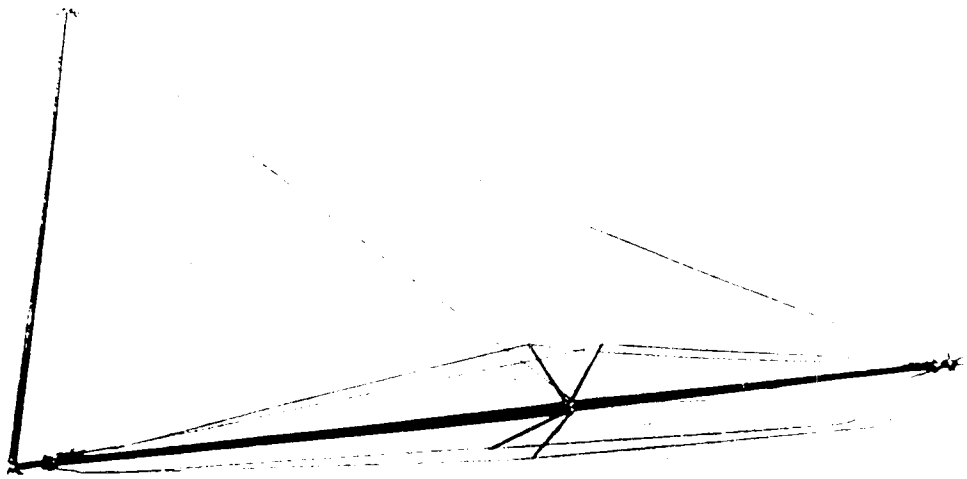

*Figure 221. Raising mast to unfold lower crossarms.*

**7** and **8** manually raise the hoist to the vertical position with the lifting cables while **6** releases the hoist chain.

**5** fastens the short lifting cable to the collar on the crossarm assembly on the center mast section.

**5** attaches the long lifting cable to the inner shackle on the wire guide assembly at the top of the mast.

*e. Installing Mast Head Assembly*

**6** takes up on the hoist so that the two lifting cables are taut. If necessary, realine the mast by means of the turnbuckles on the short lifting cable.

**3** and **4** adjust the two side guy wires by means of the winches so that they have approximately one to two feet of slack.

**6** raises the mast boom high enough to permit the two lower arms on the crossarm assembly to be unfolded (fig. 221).

**7** and **8** unfold the two lower crossarms and connect the two lower stay wires to the crossarms and to the fastener assembly at the bottom of the mast.

**CS** makes sure that the key on the fastener assembly casting is properly engaged in the keyway on the bottom mast section.

**5, 6, 7,** and **8** tighten the four stay wires so that the mast is straight. Do not place unnecessary strain on the mast by turning the turnbuckles too tight.

**1** and **2** mount the masthead assembly (target assembly) on the end of the mast and secure the assembly in place by means of the two bolts at the bottom of the assembly (fig. 221).

**1** and **2** attach the yellow and black sighting bars to the antenna horn, and a yellow and

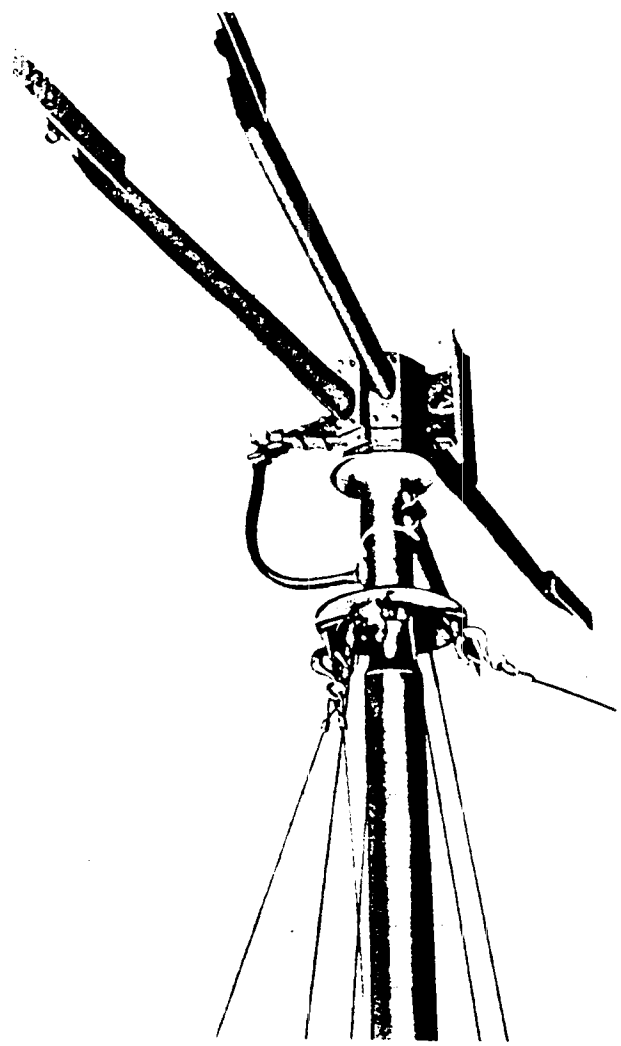

*Figure 222. Installing masthead assembly.*

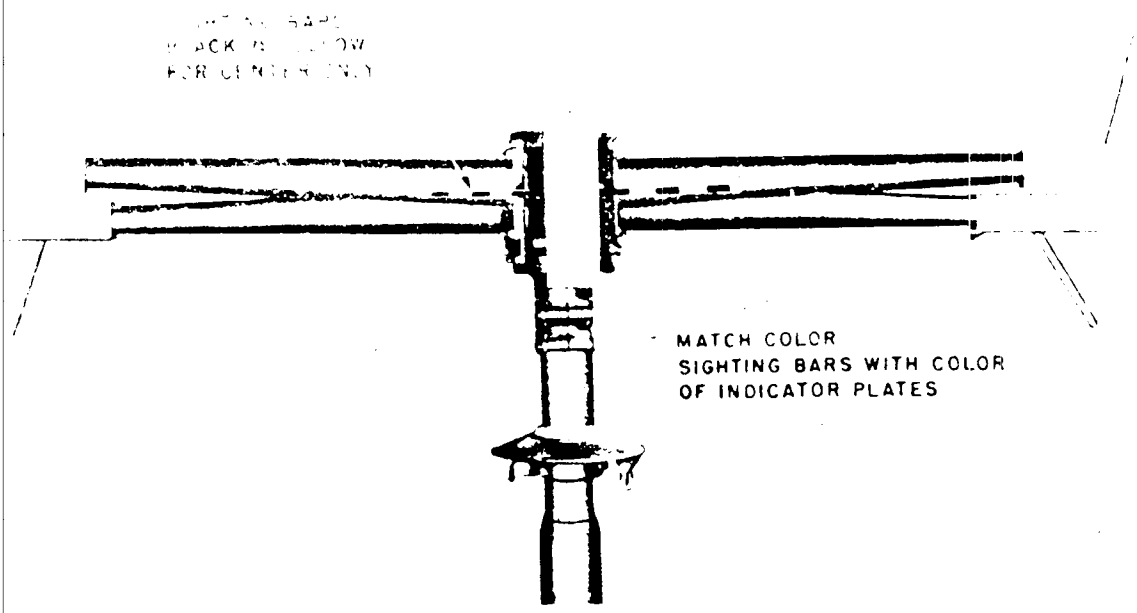


*Figure 223. Sighting bars installed.*

white sight rod to each arm (fig. 223). Match the color of the sighting rods with the color of the indicator plates. The sighting rods are mounted by inserting them into the matching slots and securing them with setscrews.

*f. Adjusting Targethead Assembly* (fig. 224).

(1) Azimuth Adjustment. Before the mast is erected, the target arms and the rf horn must be adjusted so that they can be alined with the two tracking antennas. The tracking radars need not be leveled and the sighting telescopes adjusted.

2 rotates the missile-tracking radar antenna and 5 rotates the target-tracking radar antenna until the two telescopes point directly at each other.

2 and 5 read and record the reading on the azimuth data unit. This is reading $A_1$.

2 and 5 rotate the antennas until the telescopes are sighted exactly at the base of the radar collimation mast. This is reading $A_2$.

2 and 5 read and record the readings on the azimuth data units.

2 and 5 determine the angle through which their respective antennas have rotated by determining the difference between $A_1$ and $A_2$. The differences are readings $A_{M3}$ and $A_{T3}$.

2 and 5 report these difference angles to the CS.

CS adds the difference angles and subtracts the sum from 3,200 mils. This difference is the included angle at which the target arms on the mast must be set. The CS in charge sets the target arms at this angle by loosening the locking bolts on top of the target assembly, and adjusting the target arms so that the azimuth scale reads the same as the included angle.

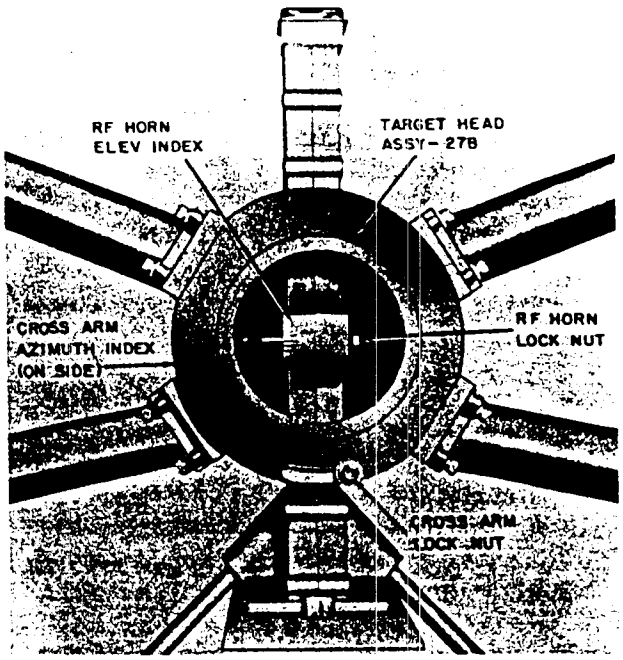


*Figure 224. Target adjustments.*

After the arms have been adjusted, **CS** retightens the locking bolt.

(2) Tilt Adjustment. The tilt angle for the rf horn is determined as follows.

**2** and **6** elevate or depress the antenna on the missile-tracking radars until the telescope on each mount points directly at the base of the collimation mast.

**2** and **6** read and record the elevation indicated on the elevation data units. These are readings $E_1$.

**2** and **6** elevate the antennas until each of the telescopes points to the top of the erected boom. These are readings $E_2$.

**2** reports to **CS**, MISSILE RADAR $E_1$ mils, $E_2$ mils.

**6** reports to **CS**, TARGET RADAR $E_1$ mils, $E_2$ mils.

**CS** determines the tilt angle setting required as follows: Find $E_T$ by subtracting $E_1$ from $E_2$. Multiply the difference by three and add the product to $E_1$. Determine $E_M$ by subtracting $E_1$ from $E_2$. Multiply the difference by three and add the product to $E_1$. Add $E_T$ and $E_M$ and divide the sum by two. This is the required tilt angle. Upon completion of the tilt angle determination, lower the mast to the ground so that the rf horn may be set to the determined tilt angle.

**CS** sets the rf horn at this angle ($E$) by loosening the rf horn locking bolt inside the target assembly and adjusting rf horn until the elevation scale on top of the horn reads the same as the value found for $E$.

**1** obtains the 21-inch flexible waveguide and the waveguide elbow, connects the waveguide elbow to the rf horn, and the 21-inch flexible waveguide between the elbow and the coupling block fastened on top of the mast.

*g. Erecting Mast* (fig. 225).

**1, 2, 4,** and **5** man the four guy wire winches.

**3** mans the hoist.

Under the direction of the **CS, 3** operates the hoist and raises the mast while **1, 2, 4,** and **5** keep about 2 feet of slack on the guy wires. After the mast is at an angle of approximately 30°, the No. 1 winch should be operated so as to remove slack in the cable. When the mast is completely raised, **CS** commands CEASE RAISING.

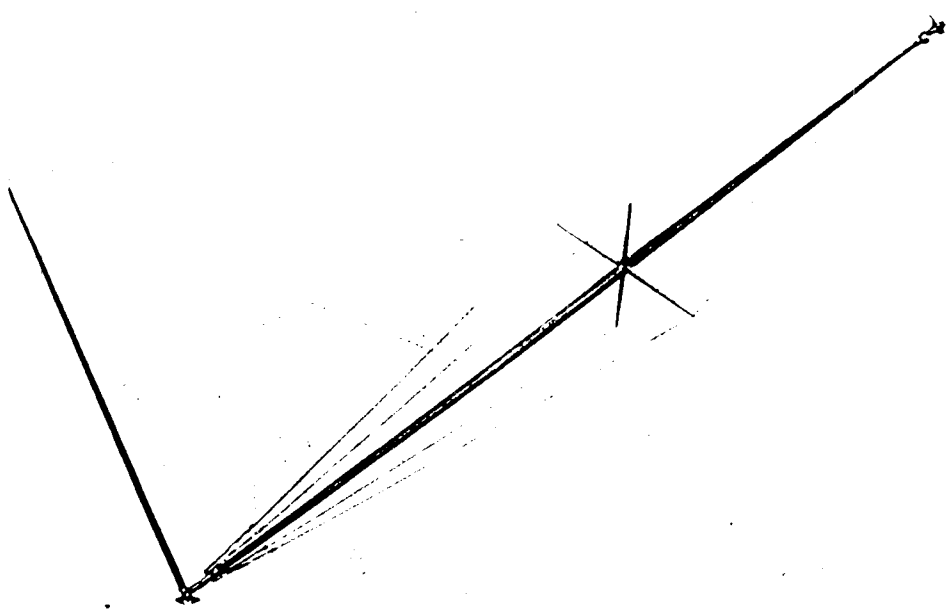

*Figure 225. Raising the mast assembly*

**1, 2, 4,** and **5** take up the slack in the guy wires and lock the winches.

**3** disconnects the hoist chain and the two guy wires from the boom.

Using the boom as a handle, **3,** assisted by **6,** rotates the mast so that the rf horn is pointing approximately midway between the two tracking radar antennas.

**6** fastens the mast in this position by tightening the four captive clamps on the mast base plate.

*h. Alining Mast Vertically.*

**5** and **6** sight the telescope of either tracking antenna at the bottom of the mast so that the vertical reticle line of the telescope is on the center of the mast. They then elevate the antenna until the telescope is sighted on the top of the mast. If the mast is properly alined, the vertical reticle line will remain on the center of the mast. If it is not, **1, 2, 3,** and **4,** under the direction of the **CS,** adjust the mast by using the four guy wires. When the mast is alined, **1, 2, 3,** and **4** apply final tension on the guy wires. Use the same torque wrenches to make the final adjustments. Recheck the vertical alinement of the mast by using the other tracking antenna.

*i. Final Adjustment of Target Assembly in Azimuth* (fig. 226).

**5** and **6** sight on one of the tracking antenna telescopes at the target assembly on top of the mast so that the vertical reticle line of the telescope is on the zero mark of the left-hand target. If the ball at the end of the sighting rod is at one side of the vertical line, **4** loosens the captive clamps at the base of the mast and **3,** using the boom as a handle, rotates the mast until the ball and zero are both on the vertical reticle of the telescope. **4** tightens the captive clamps. Recheck using the other tracking antenna. If the proper adjustment cannot be obtained by rotating the mast, the mast must be lowered and the target arms readjusted.

*j. Adjusting RF Horn in Elevation* (fig. 226).

**5** and **6** sight the optics of both tracking antennas on the target assembly so that the horizontal reticle of each telescope is lined up on the two ball ends of the sighting rods projecting from the elevation target on the rf horn. If both antennas are at the same elevation, the reticle of the scopes will line up with the center of the sighting rods. If they do not line up, lower the mast and adjust the elevation setting of the rf horn. If the track antennas are not at the same elevation, the horizontal reticle should cross the elevation target at the same number but on opposite sides for each antenna.

*k. Connecting Radar RF Test Set* (fig. 227).

**7** obtains the test set mounting bracket and fastens it to the mast using the two captive mounting bolts.

**7** and **8** get the test set from the maintenance and spares trailer, carry it to the mast, and mount it on the mounting bracket on the three button-head studs on the back of the test set.

**1** obtains the 60-inch waveguide and fastens one end to the coupling block at the bottom of the mast and the other end to the waveguide coupling on the side of the rf test set.

*l. Removing hoist, etc.*

All men wind up the boom guy wires, disconnect the hoist chain, and store them.

*m. Storing Tools.*

All men collect and store all tools and digging implements.

## 417. March Order, Tracking Radars

This procedure for march order is based upon the use of 1 NCO in charge of both radars, 1 driver, and 3 men for each trailer. See table XLIX for sequence and responsible personnel.

**CS** opens the hinged door of the equipment enclosure on the roadside of the trailer and operates the antenna disable switch S1 to the ANTENNA DISABLE (UP) position.

**2** and **3** obtain the three trunk-type latch assemblies and fasten them to the rear trailer deck.

**1** locks the turntable in transit position in azimuth and elevation.

**1, 2,** and **3** loosen the 12 captive bolts which fasten the tracking lens to the rf unit, remove the tracking lens, and fasten the lens to the rear trailer deck.

**1, 2,** and **3** cover the antenna trunnion and the tracking lens assemblies.

**1, 2,** and **3** remove, clean, and store the jack boots, and then completely retract the jacks. The three jacks must be lowered at approximately the same rate. Before the jacks are lowered, the **CS** will insure that

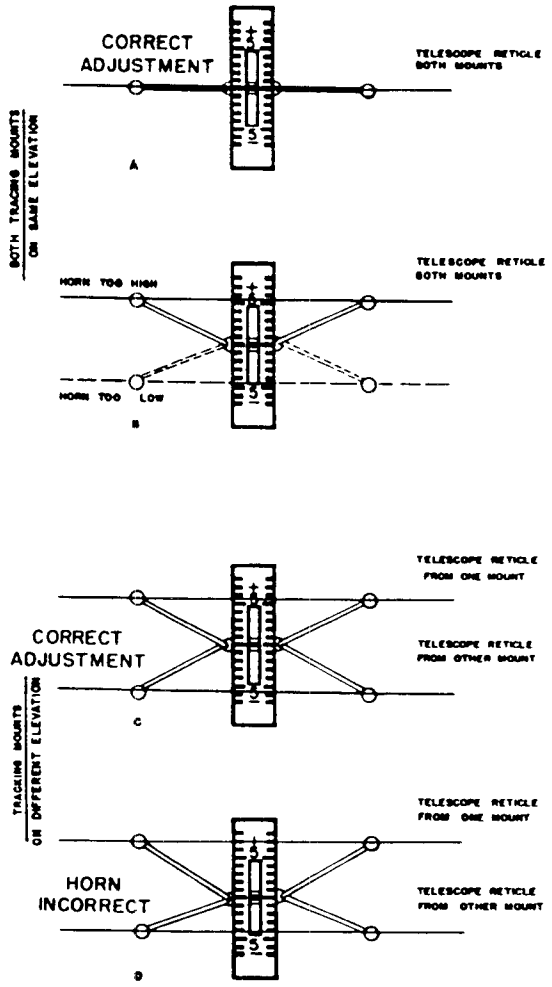


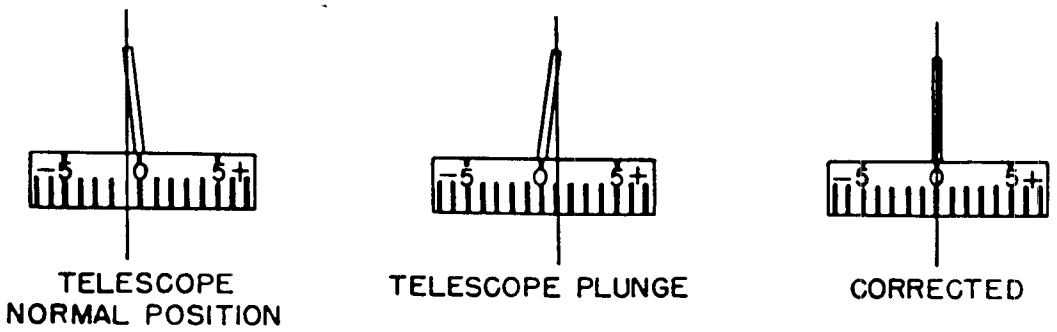


*Figure 226. Final adjustment of target assembly.*

the bolts which secure the turntable in its transit position in both azimuth and elevation are properly engaged and locked.

1 tightens the four bolts which secure the antenna assembly to the shock absorbers on the front and rear trailer decks.

2 and 3 remove the jack pads from under the jacks, clean the pads, and fasten them to the front trailer deck.

8 removes the stairs from the trailer and stores them.

1, 2, 3, and 7 remove the three machined portion protective covers from the forward trailer deck and lay them nearby.

1, 2, 3, and 7 remove and clean the three leg assemblies and secure them on the forward deck of the trailer.

## 418. Report

When the two tracking radars have been completely readied, the CS commands REPORT. The crew falls in at the missile-tracking radar and reports as follows:

D reports MTR PRIME MOVER READY.

1 reports MTR MOUNT LOCKED AND READY.

2 reports MTR YOKE ASSEMBLIES RELEASED.

3 reports MTR TOOLS STORED.

D reports TTR PRIME MOVER READY.

4 reports TTR MOUNT LOCKED AND READY.

5 reports TTR YOKE ASSEMBLIES RELEASED.

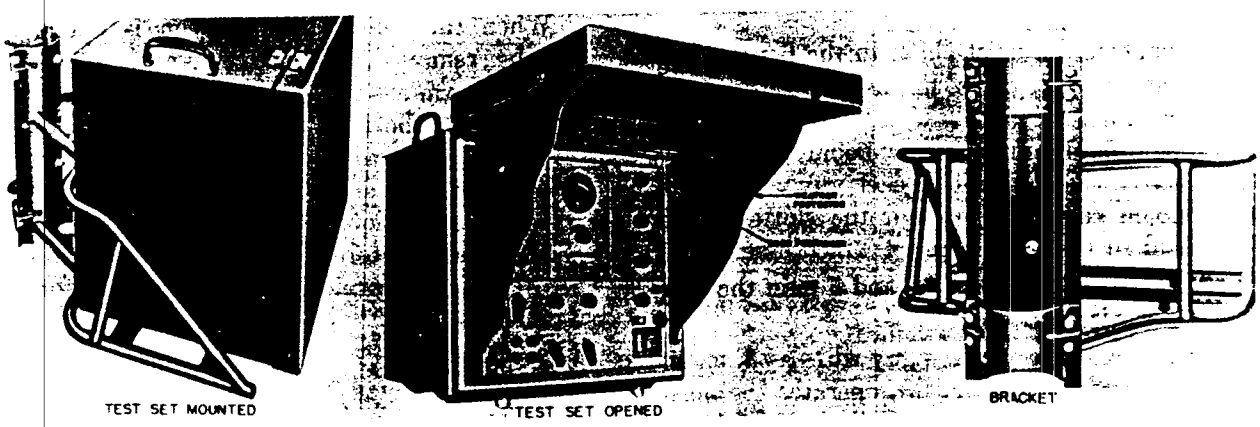


*Figure 227. Rf test set mounting rack.*

8 replaces the protective covers over the machined portion of the jack mounting surfaces, and closes the vent openings.

1 and 8 store the antenna control unit, secure the telescope assembly box, and store the telescopes, close and lock the equipment inclosure.

2 and 3 remove the chocks from behind the trailer wheels and store the chocks on the trailer undercarriage.

3 collects and stores all tools and locks the storage compartment door.

2 and 3 couple the trailer to the prime mover and connect the intervehicular cables and safety chains. If the collimation mast is transported on the prime mover, march order the mast assembly before coupling the prime mover to the trailer.

1 releases the trailer parking brake.

6 reports TTR TOOLS STORED.

7 no report.

8 no report.

## 419. March Order, Collimation Mast

*a. Moving to Test Area.*

The crew being in formation, the CS commands MARCH ORDER COLLIMATION MAST. If sufficient personnel are available, a separate crew should be formed to march order the collimation mast. This crew should operate concurrently with the tracking radar crews.

D drives the prime mover to the designated assembly area or to the collimation mast area if the mast is to be loaded on the prime mover after disassembly.

1 through 6 proceed to the location of the radar collimation mast and disassemble the mast.

**7** and **8** report to the communication sergeant for cable loading detail.

*b. Removing Radar RF Test Set.*

**2** removes and stores the flexible waveguide from the coupling block at the bottom of the mast and the radar rf test set.

**2** and **3** remove the test set from the mounting brackets and store it in the maintenance and spares trailer.

**1** removes the test set mounting bracket from the mast and stores it.

*c. Lowering Mast.*

**1** loosens the four captive clamps on the mast base plate.

**3** obtains the hoist, hoist chain, and hoist crank and fastens the hoist to anchor rod No. 5.

**3,** using the boom as a handle, rotates the mast until the boom is in line with the hoist.

**3** connects the hoist chain to the boom cable hanger and takes up as much slack as possible.

**5** and **6** obtain the two boom guy wires, fasten the hook end of each guy wire to the boom cable hanger and the slotted plate end to the Nos. 2 and 4 winch assemblies.

**3** mans the hoist, **1, 2, 4,** and **5** man the four guy wire winches.

**1, 2, 4,** and **5** loosen the guy wires as **3,** under the direction of the **CS,** operates the hoist and lowers the mast until the two lower crossarms just clear the ground. To insure that the mast will be lowered in the desired direction, the guy wire extending in the direction the mast is to be lowered is released after the other three guy wires have been loosened and the mast has tilted in the direction it is to be lowered. The winch in line with the mast and hoist (1, fig. 208) will be operated so as to assist in lowering the mast.

**1** removes and stores the 21-inch flexible waveguide and elbow.

**3** and **4** remove and store the target assembly, the four sighting rods, and the elevation target.

**5, 6, 7,** and **8** loosen the stay wires, fold the crossarms, and remove and store the stay wires.

**3** lowers the mast the rest of the way to the ground, while **1, 2, 4,** and **5** unreel the cable from the four guy-wire winch assemblies.

*d. Disassembling Mast.*

**5** and **6** manually raise the boom, disconnect the short lifting cable from the collar on the crossarm assembly, the long lifting cable from the inner shackle on the wire guide assembly, and lower the boom to to the ground.

**7** and **8** unfasten the guy wires from the outer shackles on the wire guide assembly and reel in the guy wires on the four guy-wire winch assemblies.

**1** and **2** remove and store the four guy-wire winch assemblies.

**5** and **6** remove and store the wire guide assembly from the top of the mast.

**5, 6, 7,** and **8** disassemble the mast and the rigid waveguide.

When the center mast section is ready to be removed, **5** removes and stores the crossarm assembly.

When the bottom mast section is removed from the mast base plate, **6** removes and stores the stay wire fastener from the bottom section of the mast.

**5, 6, 7,** and **8** store the 7 mast sections and the 7 rigid waveguide sections in their storage boxes.

*Completing Disassembly.*

**1** and **2** remove and store the cable hanger bracket from the end of the boom.

**1** and **2** disassemble the boom and store the three boom sections.

**1** and **2** remove and store the two boom guy wires from anchor rod No. 4 and 2.

**All men** remove and store the anchor plates and rods, the base plate stakes, the yoke subassembly, and the mast base plate assembly.

**All men** collect and store the tools and digging implements.

**All men** load the storage boxes on the prime mover.

## 420. Report

When all boxes have been loaded in the prime mover, **CS** commands REPORT. The crew falls in and reports as follows:

**D** reports PRIME MOVER READY.

**1** reports TOOLS STORED.

**2** reports BOXES SECURED.

**3** through **8**—no report.

# CHAPTER 18
# LAUNCHING AREA

## Section I. LAUNCHING CONTROL TRAILER

### 421. Crew

This procedure for the emplacement of the launching control trailer (LCT) requires 1 NCO in charge (CS), 1 driver (D), and 4 crewmen. The driver will tow the trailer close to the area designated for emplacement.

### 422. Fall In

To assemble the LCT crew, the **CS** commands
FALL IN.
The crew falls in on the left side of the launching control trailer.

### 423. Count Off

The crew being in formation, the **CS** commands COUNT OFF.
**D** reports DRIVER.
**1** through **4** report their numbers consecutively.

### 424. Call Off

The crew being in formation, the **CS** commands CALL OFF.
**D** reports DRIVER.
**1** reports CREWMAN 1.
**2** reports CREWMAN 2.
**3** reports CREWMAN 3.
**4** reports CREWMAN 4.

### 425. Prepare Trailer

The crew being in formation, the **CS** commands PREPARE TRAILER.

*a. Setting Trailer in Position.* Under the direction of the **CS**, the **driver** tows the trailer into the exact location designated for emplacement.

**1** sets the trailer parking brake.
**Driver** and **2** disconnect all the intravehicular cables and uncouple the trailer from the prime mover. **D** drives the prime mover to the rear of the trailer.
**3** and **4** lock the turn bolts in place and insure that the main coil springs on the trailer are compressed.
**1** and **4** release each of the four trailer jacks, obtain the jack crank, and extend each jack to the ground. The wheels should not touch the ground after leveling has been completed. In ConUS installations, the trailer undercarriage is removed.

*b. Installing Platform and Stairs.*

**2** and **3** release the two latches that secure the platform in a vertical position on the rear of the trailer and lower the platform to the horizontal position.
**2** unlatches and lowers the step on the curbside of the rear bumper.
**3** mounts the platform and opens the trailer door.
**3** removes the stairs from the door and hands them to **2**.
**2** fastens the stairs to the platform and adjusts the stairs for proper length.
Crew enters the trailer and removes the tiedown clamps and stores them in the general-purpose locker.

*c. Removing Cabinets.* The launching section operating and power cabinets for the launching sections are transported in the launching control trailer. The crew emplacing the launching control trailer will be responsible for removing the cabinets and delivering them to the launching section site.

**All men** remove the launching section operating and power cabinets from the launching control trailer and load them on the prime mover.
**1** secures the interconnecting cables and the launching sections' telephones and handset-headsets from the trailer and places them in the prime mover.
**2, 3,** and **4** secure the cabinets to the prime mover as required.

### 426. Report

Upon completion of the loading of the cabinets, the men fall in on the left side of the trailer.

CS then commands REPORT.

D reports PRIME MOVER READY.

1 reports CABLES AND TELEPHONES LOADED.

2 reports OPERATING CABINETS LOADED.

3 reports POWER CABINETS LOADED.

4 reports CABINETS SECURED.

Upon completion of the reports, the **driver** drives the prime mover to each area designated for the emplacement of the launching section equipment. The equipment will be unloaded by launching section personnel. After all of the section operating and power cabinets have been unloaded, the driver drives to the battery control area and reports to the communication sergeant.

## 427. Install Equipment

After the prime mover has been driven away from the launching control trailer, CS commands INSTALL EQUIPMENT.

*a. Installing Alarm Siren.*

1 removes the alarm siren from the cabinet located on the roadside wall at the rear of the trailer.

1 installs the alarm on the brackets on the rear roadside upper corner of the trailer.

1 inserts the alarm electrical disconnect into its receptacle.

*b. Installing Ground-Rod and Wire Assembly.*

2 removes the ground-rod and wire assembly from the holding clips located on the front end of the trailer.

2 drives the ground-rod into the ground a short distance from the trailer and then connects the wire to the trailer.

*c. Installing Test Responder and Mast* (fig. 228).

3 and 4 remove the three sections of the test responder mast from their supports on the roadside wall of the trailer.

3 and 4 secure the rope and pulley assembly from the storage cabinet in the trailer.

3 and 4 install the pulley assembly on the mast.

3 and 4 install the rope through the pulleys.

3 and 4 fit the top section of the mast into the center section, the center section into the bottom section, and secure the mast sections together with the attached bracket clamps.

3 and 4 attach the safety release lanyard at the top and bottom of the mast.

3 and 4 raise the responder mast against the trailer and attach the slotted brackets of the mast into the brackets on top of the trailer.

1, 2, 3, and 4 steady the mast and slip the pin at the bottom of the mast into the trailer brackets and the mast.

3 and 4 remove the responder with its bracket from the storage cabinet in the trailer and carry it to the mast.

3 and 4 connect the responder power cable. The power cable is connected to the responder through a hole in the bottom of the responder platform. The other end of the cable is connected to its receptacle on the trailer.

3 and 4 attach the cable brackets to the power cable at about 8-foot intervals, starting from the bottom of the responder.

2 and 3 raise the responder while 4 feeds the cable brackets holding the power cable into the track of the responder mast. When the responder is completely raised, 3 secures the rope around the cleat provided at the bottom of the mast.

*d. Installing Miscellaneous Equipment.*

1 connects the handset-headset to the jack boxes at the officer's desk, the utility table, the two control console stations, the launching control trailer switchboard, and a EE–8 telephone at the test responder and generator stations.

## 428. Report

Upon completion, the crew fall in at the rear of the trailer. The driver will not be present. CS then commands REPORT.

1 reports SIREN AND TELEPHONES INSTALLED.

2 reports GROUND WIRE INSTALLED.

3 reports MAST INSTALLED.

4 reports RESPONDER INSTALLED.

## 429. March Order

This procedure for march ordering the launching control trailer uses 1 NCO in charge (CS), 1 driver (d), and 4 crewmen. The LCT will be march ordered only upon direction from the battery commander.

## 430. Fall in

To assemble the LCT crew, the CS commands MARCH ORDER, FALL IN.

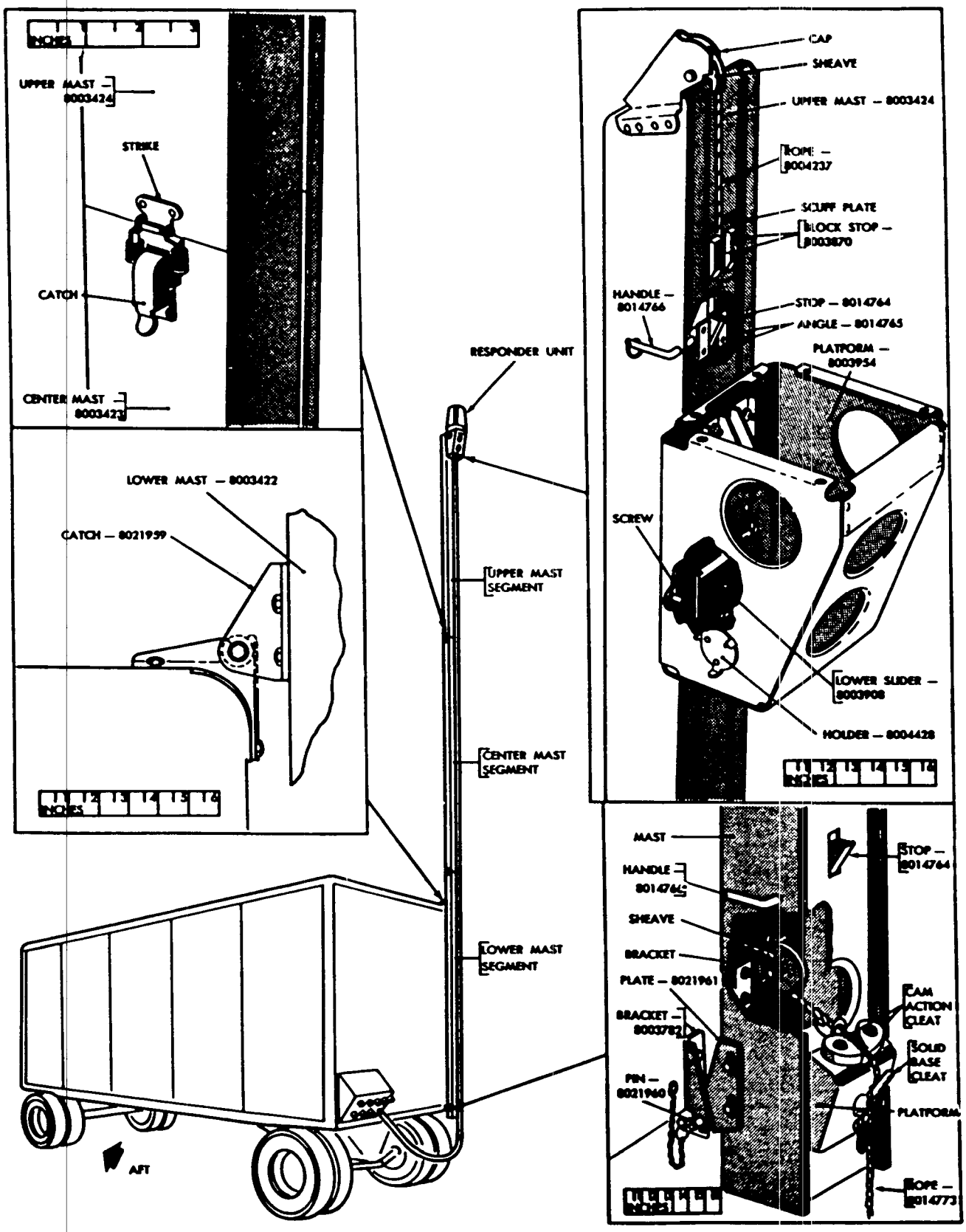


*Figure 228. Installation of test responder and mast.*

The crew less the driver will fall at the LCT. The CS then commands COUNT OFF and CALL OFF if required to verify his crew. The driver and prime mover will not be present until all cables have been placed on reels.

## 431. Remove Equipment

The crew being in formation, the CS commands REMOVE EQUIPMENT.

*a. Disconnecting Cables.*

1 and 2 disconnect all the cables from the trailer junction box on the lower curbside section of the forward wall on the outside of the trailer and replace all receptacle covers.

*b. Removing Test Responder and Mast.*

1, 2, and 3 loosen the rope from the cleat at the bottom of the responder mast and raise the responder.

4 releases the safety catch as 1, 2, and 3 pull the responder upward.

1, 2, and 3 lower the responder to the bottom of the mast.

3 and 4 remove the cable brackets.

3 and 4 disconnect the responder power cable.

3 and 4 remove and store the responder and responder platform.

1, 2, 3, and 4 remove the pin running through trailer bracket and the lower mast section.

3 and 4 unlock the mast from the locking unit on top of the trailer and lower the mast to a horizontal position on the ground.

3 and 4 remove the safety release lanyard.

3 and 4 remove the pulley assembly from the mast and store it in the storage cabinet.

3 and 4 unfasten the clamps from the mast sections, separate the three mast sections, and store them in their supports on the roadside wall of the trailer, first securing the officer's desk to the wall of the trailer.

*c. Removing Miscellaneous Communication Equipment.*

1 and 2 remove the handset-headsets from the jack boxes at the officer's desk, the utility table, the two control console stations, and switchboard, and the EE–8 telephones from the generator stations and store them in the storage cabinet.

*d. Removing Alarm Siren and Ground-Rod and Wire.*

1 disconnects the alarm siren electrical disconnect from its receptacle.

1 removes the alarm from its brackets and stores the alarm in the cabinet on the roadside wall on the rear of the trailer.

2 pulls the ground rod from the ground and cleans the rod.

CS and 1 assist in pulling the rod as needed.

2 disconnects the ground-rod wire from the trailer.

2 secures the ground-rod and wire assembly in the clips located at the front end of the trailer.

*e. Interior Equipment*

2 and 3 secure and lock the swivel chairs and the swinging seat in their transit positions.

*f. Launching Section Operating and Power Cabinets.* The launching section operating and power cabinets are transported in the LCT. The launching control trailer prime mover driver will drive directly to each section as soon as the necessary cables have been placed on reels. Personnel at each section revetment will load their equipment on the prime mover. After the prime mover arrives at the launching control trailer with the cabinets, the CS commands STORE CABINETS.

1, 2, 3, and 4 unload the operating and power cabinets from the prime mover and place them in the LCT.

1 stores the jumper cables and telephone equipment.

2 and 3 secure the cabinets in their traveling positions.

## 432. Prepare Trailer

After the launching section operating and power cabinets, telephones, handset-headsets, and jumper cables are stored and secured in the trailer the CS commands PREPARE TRAILER.

All men install the trailer undercarriage if it was removed during emplacement.

2 closes all the trailer vents.

1 removes the stairs from the platform and fastens them to the inside of the trailer rear door.

2 raises and locks the step on the rear bumper.

1 locks the trailer rear door.

1 and 2 raise and fasten the platform to the vertical position.

1 obtains the jack crank and raises and secures each jack in its traveling position.

3 and 4 remove the clamps from the springs.

D backs the trailer prime mover into position under the direction of the CS.

2 connects the trailer to the prime mover, connects the safety chains, electric brake and light cable, and the breakaway cable.

1 releases the parking brake on the trailer.

### 433. Report

As each crew member completes his assignment, he falls in at the left side of the trailer. The CS checks to insure the parking brake is released. CS then commands REPORT.

1 reports BRAKE RELEASED.

2 reports CABLES CONNECTED.

3 reports JACKS UP AND SECURED.

4 reports TRAILER IN ORDER.

D reports READY TO MOVE.

The **driver** then rows the trailer to its predesignated place.

## Section II. LAUNCHING SECTION CONTROL EQUIPMENT

### 434. Emplacement

This procedure for emplacing the launching section control equipment uses one NCO in charge (CS), and four launcher crewmen for each section. The section operating and power cabinets and telephone equipment are transported in the launching control trailer. The launching control trailer personnel will unload the equipment from the launching control trailer, load it on their prime mover, and the driver will drive to each launching section, in turn, where personnel from the launching section concerned will unload their section's equipment. After all of the section equipment has been unloaded, the driver will drive to the battery control area and report to the communication sergeant.

### 435. Fall In

After the prime mover with the section equipment arrives at the launching section revetment, the CS directs the driver to drive his prime mover near the section revetment. CS then commands FALL IN.

Crew members and the prime mover driver fall in near the revetment.

### 436. Count Off

The crew being in formation, the CS commands COUNT OFF.

D reports DRIVER.

1 through 4 report their individual numbers consecutively.

### 437. Call Off

The crew being in formation, the CS commands CALL OFF.

D reports DRIVER.

1 through 4 report CREWMAN followed by their individual numbers.

### 438. Unload Equipment

The crew being assembled, the CS commands UNLOAD EQUIPMENT.

All men remove one section power cabinet from the prime mover and set it in the section revetment.

All men remove one section operating cabinet from the truck and place it on top of the section power cabinet. CS insures that indexing legs of the operating cabinet are properly alined with the corresponding holes in the top of the power cabinet.

1 removes the interconnecting cables and the section telephones and handset-headsets from the prime mover.

D drives to next launching section.

1 connects the power and signal interconnecting cables.

4 connects the telephones and handset-headsets.

### 439. March Order

This procedure for march ordering the launching section equipment uses one NCO in charge (CS) and four crewmen for each section. The section equipment will be march ordered only upon direction from the battery commander. The driver and prime mover will not be present until after the necessary cables have been placed on reels and loaded on the prime mover. The driver drives to each section where the section personnel will load the section equipment on the prime mover. After all the section equipment has been loaded, the driver drives to the launching control trailer. The same drill will be followed at each section.

### 440. Fall In

To assemble the crew, the CS commands FALL IN.

The crew falls in near the revetment.

### 441. Count Off

The crew being in formation, the CS commands COUNT OFF.

1 through 4 report their numbers consecutively.

### 442. Call Off

The crew being in formation, the CS commands CALL OFF.

1 through 4 in consecutive order report CREWMAN followed by his individual number.

### 443. Load Equipment

The crew being in formation, the CS commands LOAD EQUIPMENT.

D drives the prime mover into position directed by the CS.

4 disconnects the telephones and handset-headsets.

1 disconnects the interconnecting cables.

1, 2, 3, and 4 lift the operating cabinet from the power cabinet and load it onto the prime mover.

1, 2, 3, and 4 load the power cabinet onto the prime mover.

1 loads the interconnecting cables on the prime mover.

4 loads the telephone equipment on the prime mover.

### 444. Report

After the cabinets, jumper cables, and telephone equipment have been loaded onto the prime mover, the crew members fall in near the section revetment. CS then commands REPORT.

D reports PRIME MOVER READY.
1 reports CABLES LOADED.
2 reports OPERATING CABINET LOADED.
3 reports POWER CABINET LOADED.
4 reports CABINETS SECURED.

Having received the reports, CS directs the driver to proceed to the next section. After all section equipment has been loaded the driver drives the prime mover to the launching control trailer.

## Section III. LAUNCHER-LOADER ASSEMBLIES

### 445. Emplacement

This procedure for emplacing the launcher-loaders is based upon the use of 1 NCO (CS) in charge, 1 senior crewman, 1 driver (D) for each vehicle, and 7 crewmen. During march order, the launcher is mounted on a bogie and towed by a prime mover. The loading racks and other equipment for each launcher-loader are carried on its prime mover.

### 446. Sequence

Each of the launcher-loaders within a section will be emplaced in turn by the same crew. To clear the vehicles from the area as quickly as possible so that the cables may be emplaced when the crews are ready, the emplacement crew falls in at the first launcher-loader to be emplaced. At the command EMPLACE LAUNCHER, the crew completely emplaces one launcher-loader less cables. While the first launcher-loader is being emplaced, the senior launcher crewman and the drivers for the other prime movers will uncouple the remaining launchers and unload the loading racks, storage boxes, and ground stake boxes from their prime movers at the designated place for emplacement. The drivers will drive to the battery control area and report to the communication sergeant at the battery control trailer. The senior launcher crewman returns to the launcher-loader being emplaced and assists as required.

### 447. Fall In

To assemble the launcher-loader crew, the CS commands FALL IN.

D, 1, 2, 3, and 4 line up from front to rear on the left side of the launcher to be emplaced.

5, 6, and 7 line up from front to rear on the right side of the launcher to be emplaced. CS takes his position two paces to the rear of and in line with the launcher.

### 448. Count Off

The crew being in formation, CS commands COUNT OFF.

D reports DRIVER.

1 through 7 report their numbers consecutively.

### 449. Call Off

The crew being in formation, the CS commands CALL OFF.

D reports DRIVER.

1 through 7 report CREWMAN followed by their respective numbers.

## 450. Emplace Launcher

The crew being in formation, the CS commands EMPLACE LAUNCHER.

*a. Unloading Prime Mover.*

**D** mounts the prime mover.

**1** disconnects the intervehicular cable at the prime mover.

**2** extends the forward jack.

**3** and **4** unhook the launcher-loader from the prime mover.

**D** drives the prime mover forward approximately 6 feet.

**1, 2, 3,** and **4** move out to the left side of the prime mover and unload three sections of the loading racks and the storage box from the prime mover.

**5, 6,** and **7** move out to the right side of the prime mover and unload two sections of loading racks and the ground stake box from the prime mover.

**D** drives prime mover to the battery control area and reports to the communication sergeant.

*b. Emplacing Launcher* (figs. 229 and 230).

**1, 2,** and **3** emplace the launcher while **4, 5, 6,** and **7** assemble the storage racks on the left side of the launcher. **1, 2,** and **3** then install the electric and hydraulic cables and lines while **4, 5, 6,** and **7** assemble the storage racks on the right side. All men then stake down the storage racks and bolt down the launcher.

**1** retracts the forward jack.

**2** extends the left leg jack with the stabilizing leg still secured to the side of the launcher.

**3** extends the right leg jack with the stabilizing leg still secured to the side of the launcher.

**2** loosens the nuts on the left trunnion bolt that extends down and aft just behind the bogie axle.

**3** loosens the nut on the right trunnion bolt that extends down and aft just behind the bogie axle.

**1** removes the electrical brake disconnect plug from the launcher-loader receptacle.

**2** and **3** push the bogie out when the launcher is jacked up high enough to allow the bogie to drop out of engagement.

**2** and **3** retract the leg jacks. If necessary, place a block of wood under the launcher to insure the stabilizing legs can be swung outward after the bogie is removed.

**1** disconnects the bumper and running-light assembly disconnect plug from its socket on the launcher base.

**2** and **3** remove the fasteners that secure the bumper assembly to the launcher, remove the bumper, and place it with the bogie for later storage.

**2** removes the slip pin that secures the left stabilizing leg to the side of the launcher and swings the leg around to the stop.

**3** removes the slip pin that secures the right stabilizing leg to the side of the launcher and swings the leg around to the stop.

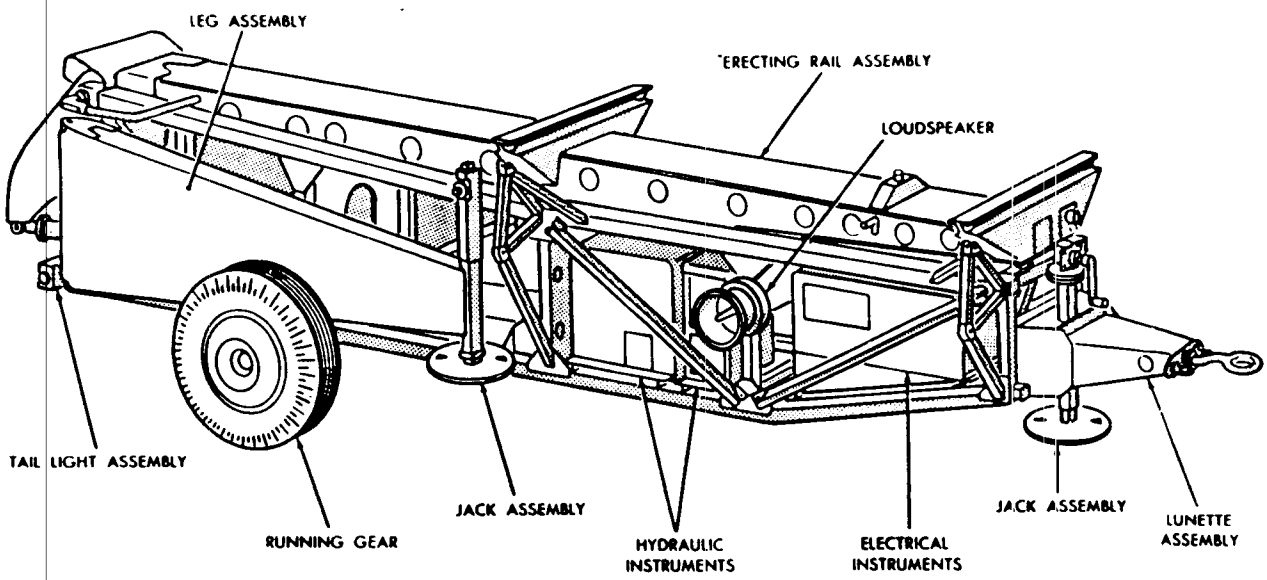


*Figure 229. Launcher in traveling position.*

**1** extends the forward jack. **2** and **3** extend the left and right stabilizing leg jacks until the launcher is raised approximately 42 inches.

**CS** checks the level of the launcher with the gunners quadrant, and instructs **1, 2,** and **3** to RAISE or LOWER as required until the launcher is level.

**1, 2,** and **3** tighten the setscrews on the jacks.

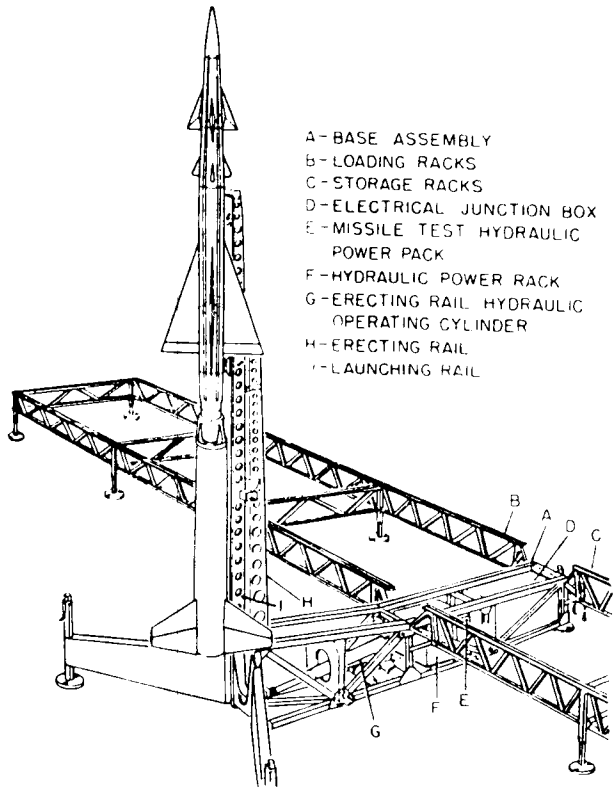


*Figure 230. Launcher emplaced.*

*c. Assembling Loading Racks (Concurrent With Launcher Emplacement)* (fig. 231).

**4** and **5** pick up a side truss and fasten it to the protruding open framework truss at the center of the launcher with the slip pins.

**6** and **7** pick up a side truss and fasten it to the protruding forward open framework truss on the front of the launcher with the slip pins.

**7** picks up each float, and assisted by **5** and **6,** fastens it to the support at each end truss.

**4** and **5** pick up an end truss and fasten it to the side trusses with the slip pins.

**4** through **7** continue this process until the three loading racks on the left side and two on the right side of the launcher are completely assembled.

**CS** checks the loading racks for proper height by sight. Commands RAISE or LOWER as required. The crewmen raise or lower the telescopic pin-locking tubular supports at each end of each truss as required.

*d. Installing Launcher Operating Panel and Clamps (First Section of Storage Racks Installed).*

**1** and **2** remove the launcher operating panel from the base of the launcher and clamp it on the forward side truss on the left side of the launcher and within 5 feet of the launcher junction box (fig. 232).

**3** removes the loudspeaker from the base of the launcher and clamps it on the first side truss next to the launcher operating panel.

**1, 2,** and **3** install the three clamp assemblies on the forward side trusses. The clamps are installed approximately 80 inches apart with the first assembly approximately 20 inches from the left end (at the rail locating holes).

**2** and **3** install the bumper stops on the inside of the tracks near each missile test station.

**1, 2,** and **3** connect the 12 intermediate clamps to the racks.

**2** and **3** connect a short length flex hose with a male quick-disconnect on the end to the bottom port of the forward tee on each clamp assembly attach female disconnect line.

**1** mounts the clamp assembly and the hydraulic selector valve, with the selector valve handle forward, on the forward side truss on the left side and approximately 18 inches from the launcher attach point (fig. 233).

*e. Hydraulic and Electric Connections (All Storage Racks on Left)* (fig. 234).

**1, 2,** and **3** connect the hydraulic lines as follows:

(1) From the port on the hydraulic selector valve toward the missile testing stations to the pressure line at each testing station.

(2) From the missile testing station side of the tee on the bottom port of the hydraulic selector valve to the return line at each testing station.

(3) From the top port on hydraulic selector valve, to the pressure line from the missile testing hydraulic power unit.

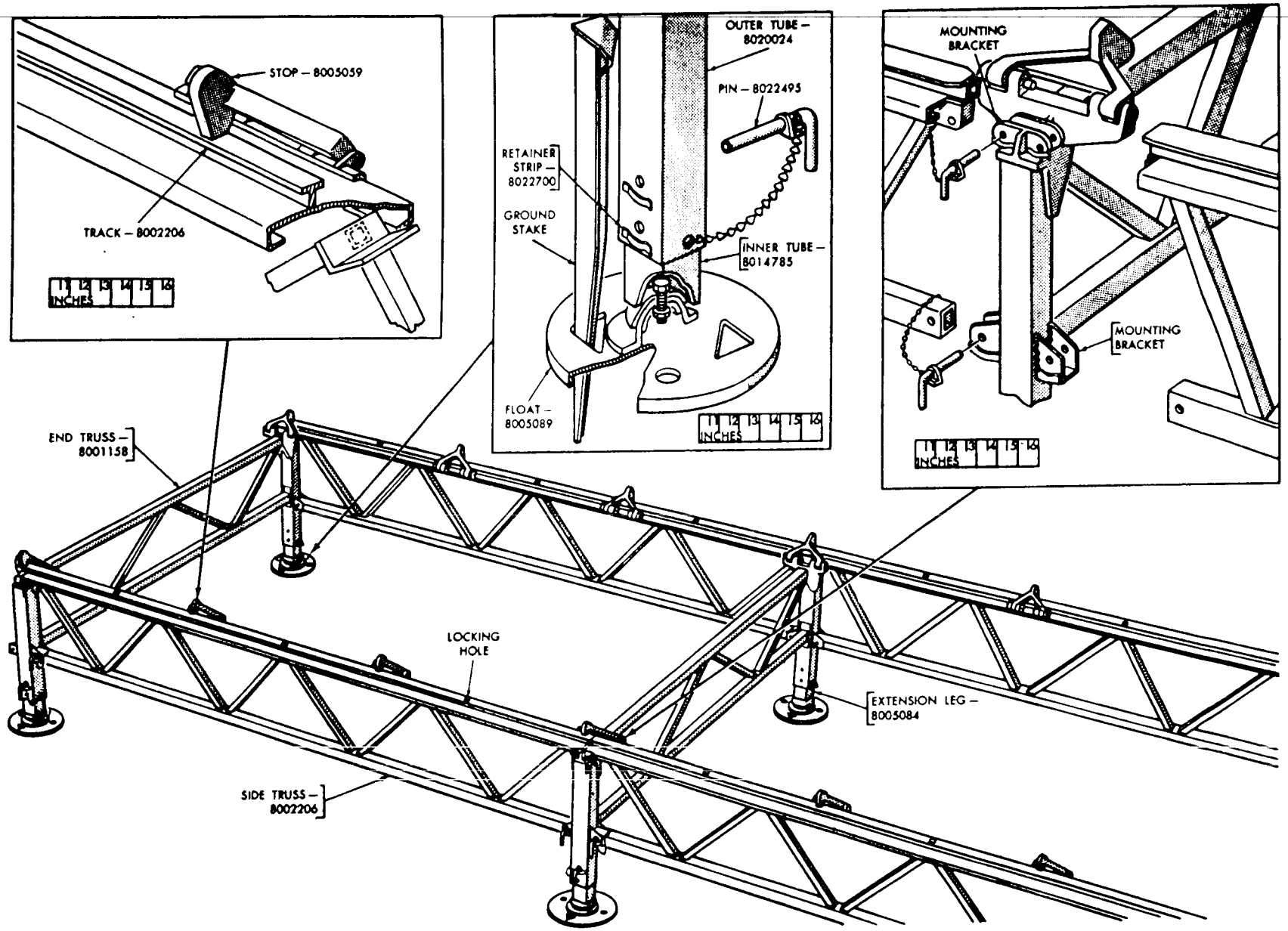


Figure 234. Assembling storage racks

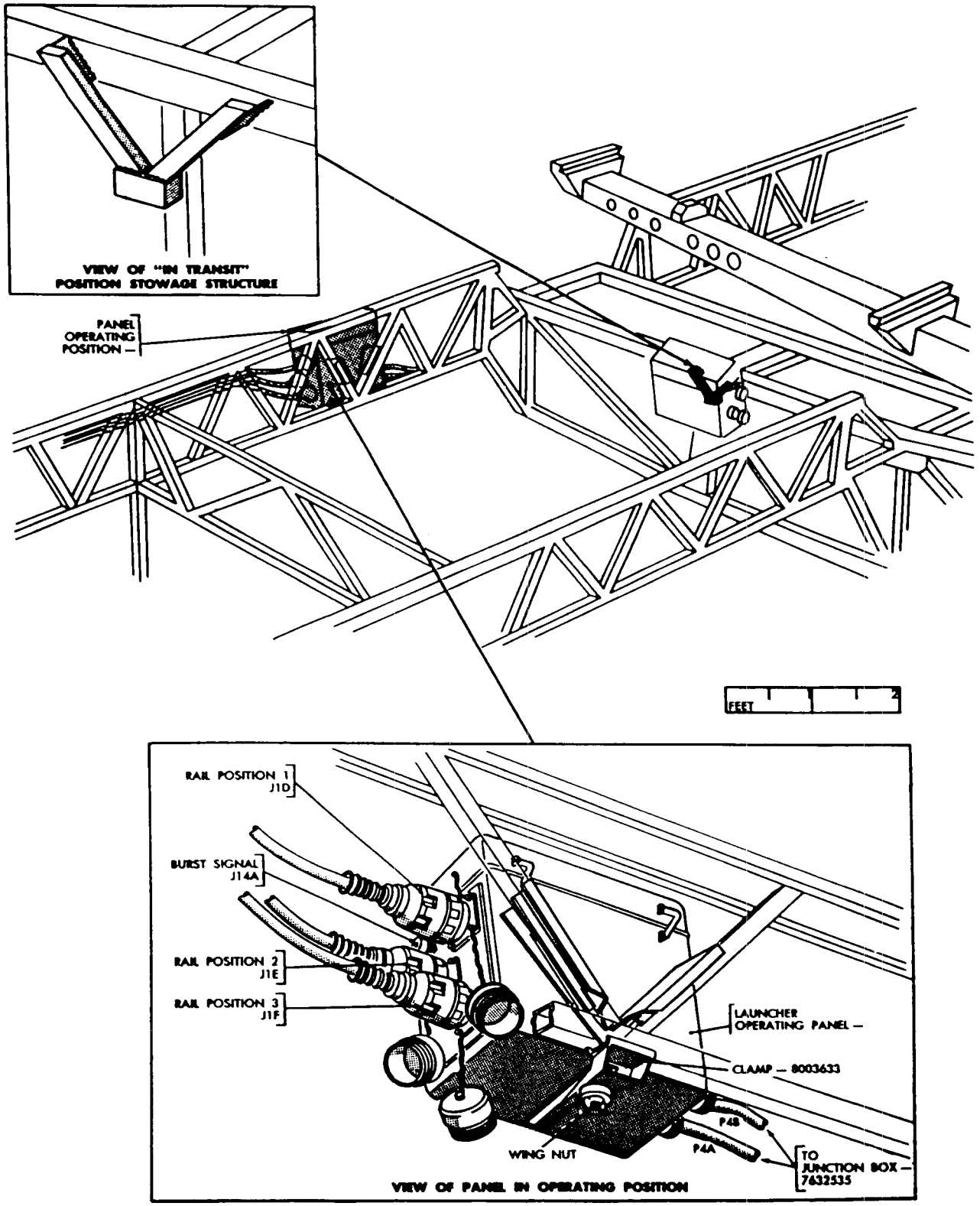


*Figure 232. Installation of launcher operating panel.*

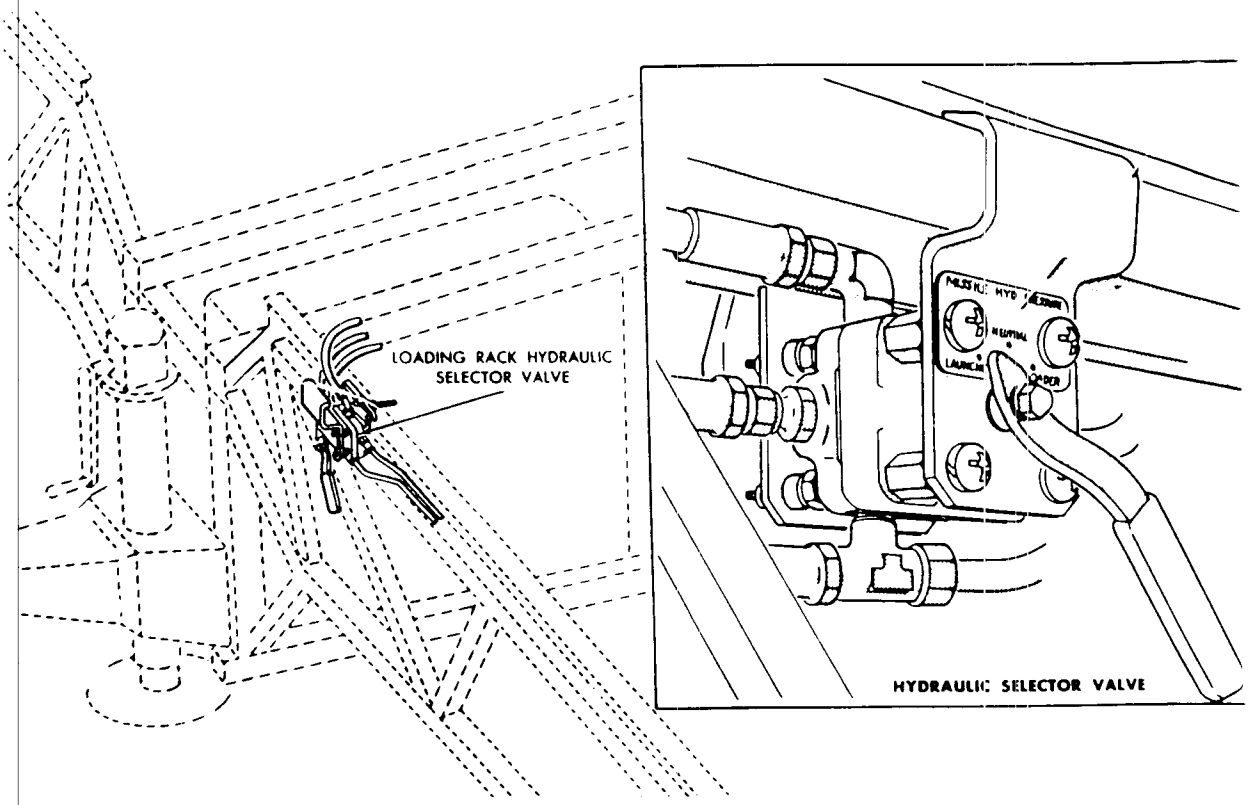


*Figure 233. Installation of hydraulic selector valve.*

(4) From the port toward the launcher to the pressure line from the missile on the erecting arm.

(5) From the launcher side of the tee on the bottom port of the hydraulic selector valve to the return line from the missile testing hydraulic power unit.

**1, 2,** and **3** fasten the hydraulic lines and electric cables to the loading racks with the 12 intermediate clamps.

**1** connects the cable assembly from missile test station No. 1 to the top electrical disconnect.

**2** connects the cable assembly from missile test station No. 2 to the center electrical disconnect.

**3** connects the cable assembly from missile test station No. 3 to the bottom electrical disconnect.

**1** removes the holddown trunnion slip pins that secure the erecting arm to the cradle. There is one slip pin located on each of the forward attach-type trusses.

*f. Bolting and Staking Down (Launcher and Racks Emplaced).*

**1, 2,** and **3** attach the storage box to the left end truss of the loading racks on the left side of the launcher-loader assembly (fig. 235).

**4, 5, 6,** and **7** stake the loading racks to the ground.

**1, 2,** and **3** bolt the launcher to the launcher pad.

**1** and **2** drive the ground stake into the ground and connect the ground stake cable.

## 451. Report

As each man completes his work, he will go to the rear of the launcher-loader assembly. When all men have finished, CS commands REPORT. The crew falls in at the rear of the launcher and reports as follows:

**1** reports ERECTING ARM FREE.
**2** reports JACKS DOWN.
**3** reports HYDRAULIC AND ELECTRICAL CONNECTIONS COMPLETE.
**4** reports LEFT RACKS COMPLETE.
**5** reports RIGHT RACKS COMPLETE.
**6** reports STAKED AND LEVELED.
**7** reports STORAGE BOX INSTALLED.

## 452. Emplace Launcher (2) (3) (4)

After any deficiencies reported in paragraph 451 have been corrected, CS commands EMPLACE

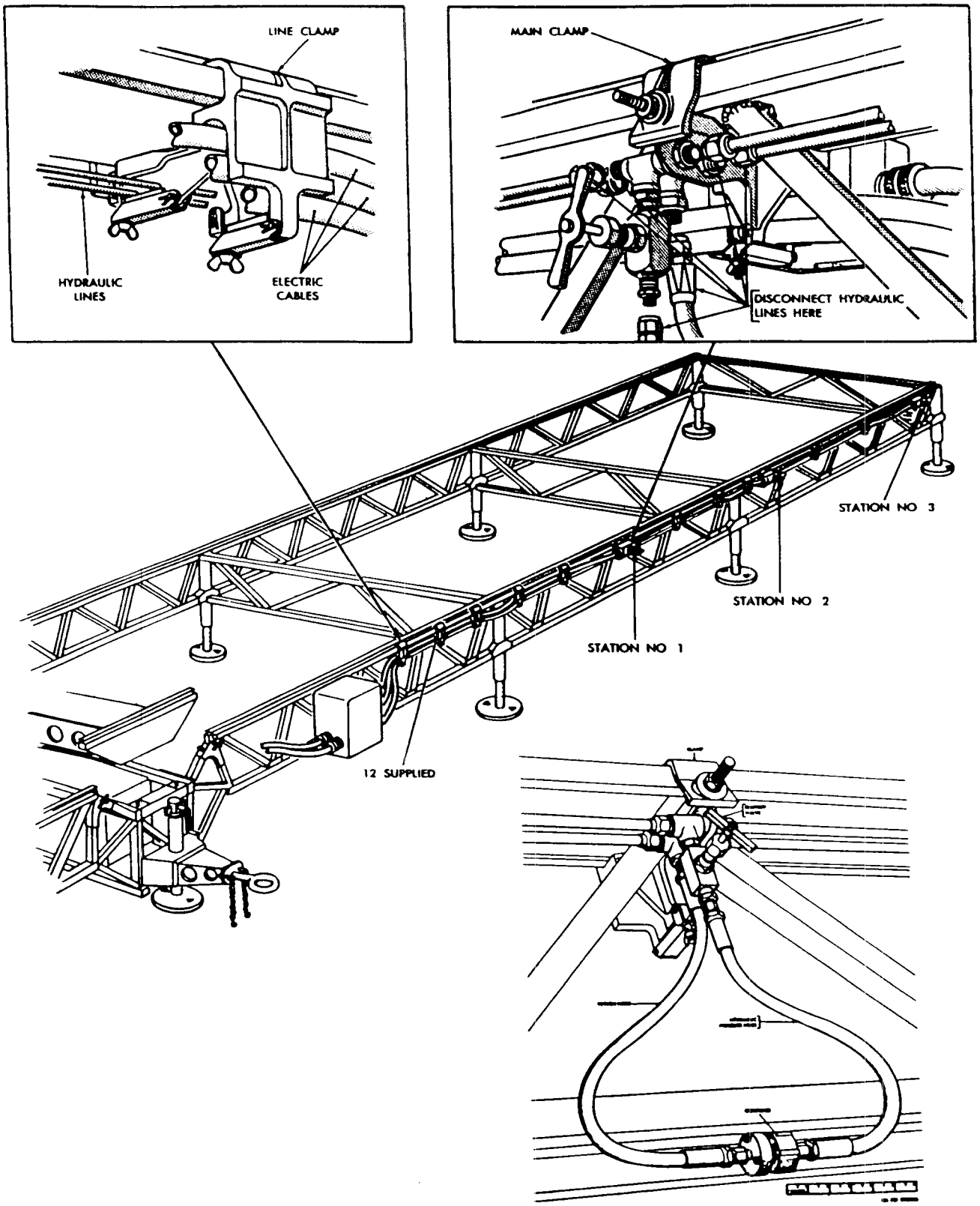


*Figure 234. Hydraulic and electric connections.*

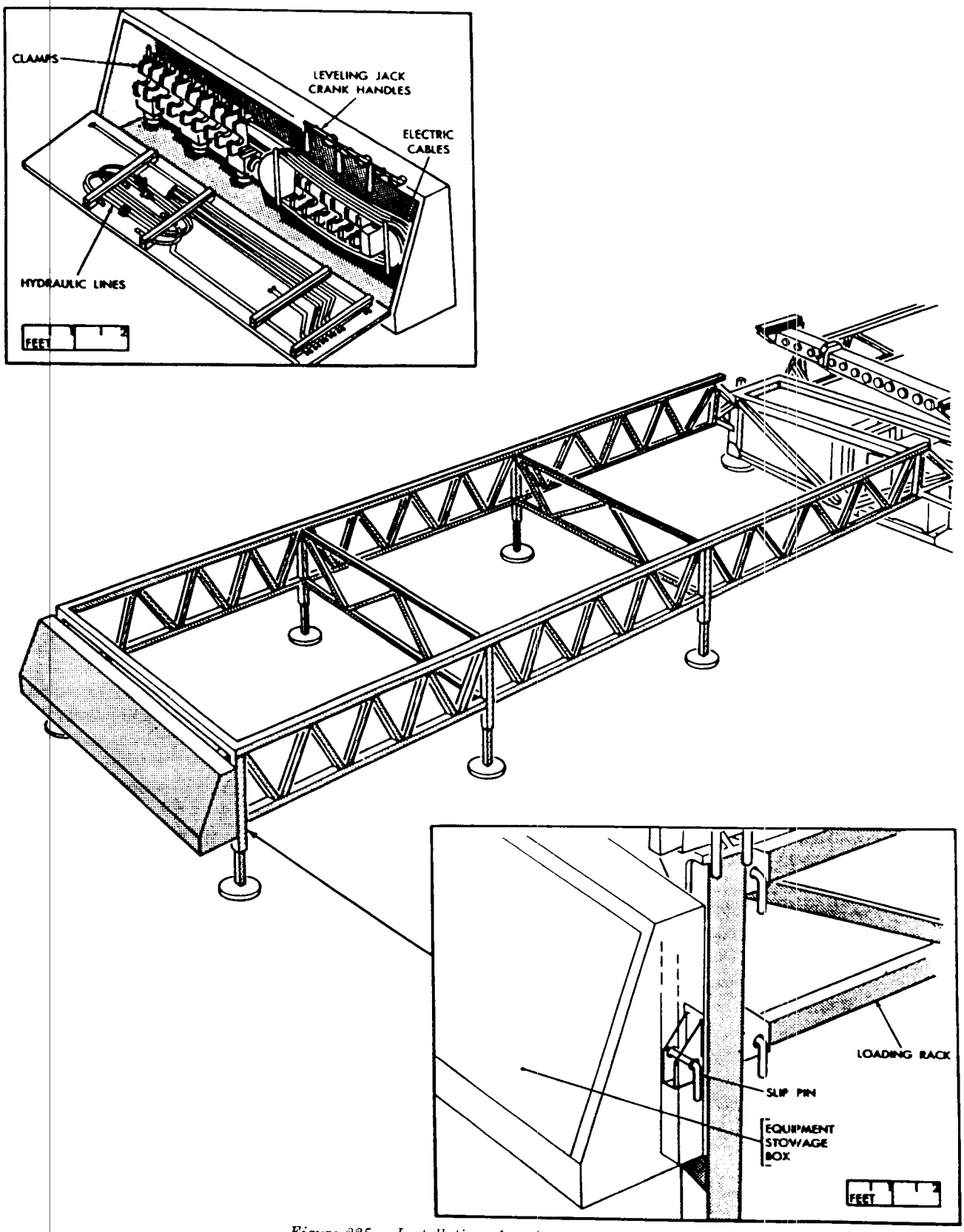


*Figure 235. Installation of equipment storage box.*

LAUNCHER (2) (3) (4). The entire crew (less driver) then moves to launcher number (2) (3) (4) and completes the emplacement of that launcher-loader.

## 453. March Order

This procedure for march ordering the launcher-loader assemblies uses one NCO in charge (CS), one driver for each prime mover, and seven crewmen. The launcher-loaders will be march ordered only upon direction from the battery commander.

## 454. Fall In

To assemble the crew, the CS commands MARCH ORDER, FALL IN.

The drivers with the prime movers will not be present until all cables have been placed on reels.

**1, 2, 3,** and **4** fall in from front to the rear at the left of the launcher.

**5, 6,** and **7** fall in to the right of the launcher. **CS** takes his position 2 paces forward of and in line with the launcher.

## 455. Count Off

The crew being in formation, the **CS** commands COUNT OFF. **1** through **7** call out their numbers consecutively.

## 456. Call Off

The crew being in formation, the **CS** commands CALL OFF.

Each crew member in turn calls off CREWMAN followed by his respective number.

## 457. March Order Drill

The crew being in formation, the **CS** commands MARCH ORDER LAUNCHER.

*a. Preparing Loading Racks.*

**5** and **6** remove the storage box from the loading racks.

**7** and **8** remove and store the ground-rod wire and stake.

**5** and **6** disconnect all of the electrical cables.

**1, 2, 3,** and **4** disconnect all of the hydraulic lines.

**7** removes the 12 intermediate clamp assemblies.

**3** and **4** remove the three clamp assemblies.

**7** removes the hydraulic selector valve and clamp assembly.

**5** and **6** pack the cables, hoses, clamps, and accessories in the storage box.

**3** and **4** secure the erecting arm in its cradle by inserting the two holddown trunnion slip pins, one of which is located on each of the forward attach-type trusses.

**1** and **2** remove the launcher operating panel and clamp it to the base of the launcher.

**7** removes the loudspeaker and clamps it to the base of the launcher.

All men remove the ground stakes.

**5** and **6** disassemble the end trusses.

**1** and **2** disassemble the rear side trusses.

**3** and **4** disassemble the forward side trusses. Lay the end and side trusses away from the launcher and on the side they were removed from.

**7** disassembles the floats.

*b. Preparing Launcher.*

**4, 5,** and **6** unbolt the launcher from the launcher pad.

**1, 2,** and **3** loosen the setscrews on the jacks.

**2** retracts the forward jack.

**1** retracts the left stabilizing jack.

**3** retracts the right stabilizing jack. All three jacks should be retracted at approximately the same rate.

**1** and **3** fold the left and right stabilizing legs against the side of the launcher and secure them with the slip pins.

**1** and **3** extend the stabilizing jacks (left and right) to raise the launcher until the bogie can be pushed into position under the launcher.

**4** and **6** push the bogie into position under the launcher.

**7** connects the electric brake disconnect plug to the launcher-loader assembly.

**4** tightens the left trunnion bolt nuts.

**6** tightens the right trunnion bolt nuts.

**7** fastens the bumper assembly to the launcher.

**7** connects the bumper and running light assembly disconnect plug to its socket on the launcher base.

**1** and **3** retract the left and right leg jacks.

**2** extends the forward jack.

**All men** load the equipment onto the prime mover.

**D** positions the prime mover so that the launcher can be connected to the prime mover.

**3** and **4** couple the launcher to the prime mover.

**2** retracts the forward jack.

**1** connects the intervehicular cable at the prime mover and the breakaway chains.

## 458. Report

When all the equipment has been loaded, the **CS** commands REPORT.

**D** and **1** through **7** fall in on the left side of the prime mover.

**1** reports LEFT JACK UP.
**2** reports FORWARD JACK UP.
**3** reports BOGIE SECURED.
**4** reports ERECTING ARM SECURED.
**5** reports RIGHT JACK UP.
**6** reports STORAGE BOX COMPLETE.
**7** reports ALL EQUIPMENT LOADED.

## 459. March Order Launcher (2) (3) (4)

Having received the reports in 458 above, and being satisfied launcher-loader 1 is ready to move. **CS** commands MARCH ORDER, LAUNCHER (2) (3) (4).

**D** for prime mover launcher-loader 1 mounts his vehicle and tows the launcher-loader to the designated location.

Crew reports on the double to launcher-loader (2) (3) (4) and march orders launcher-loader (2) (3) (4).

# CHAPTER 19
# ASSEMBLY AREA

## 460. Responsible Personnel

Personnel in the launching platoon headquarters and the battalion assembly and service section emplace the assembly area equipment. This will be done at the same time the other battery equipment is being emplaced.

## 461. Fall in

To assemble the section, the CS commands ASSEMBLY AND SERVICE CREW, FALL IN. The crew falls in at normal interval facing the CS.

## 462. Count Off

The section being assembled, CS commands COUNT OFF.

1 through 9 report their numbers in order.

## 463. Call Off

The section being assembled, CS commands CALL OFF.

1 reports MISSILE MECHANIC.
2 reports MISSILE MECHANIC.
3 reports ELECTRONICS MATERIEL SPECIALIST.
4 reports AIR COMPRESSOR OPERATOR.
5 reports CRANE OPERATOR AND CREWMAN.
6 reports CREWMAN.
7 reports CREWMAN.
8 reports CREWMAN.
9 reports GENERATOR OPERATOR.

## 464. Emplace Test Equipment

The section being assembled, CS commands EMPLACE TEST EQUIPMENT.

1, 5, 6, and 7 go to the site designated for emplacing the hydraulic test stand.

2, 3, and 8 go to the site designated for emplacing the electrical test equipment.

4 goes to the site designated for emplacing the air compressor.

9 goes to the site designated for emplacing the portable generator.

Drivers drive their prime movers to the area designated for the emplacement of their loads.

All personnel immediately proceed to emplace their equipment without further commands from the CS. The CS continuously checks all crews for proper emplacement procedures.

## 465. Hydraulic Test Stand

1, 5, 6, 7, and driver, using the power crane, remove the hydraulic test stand from the vehicle in which it has been transported to the assembly area.

Driver drives prime mover to the battery control area and reports to the communication sergeant.

1 inspects the complete assembly for any damage incurred during transit.

6 makes sure the drain plug in the bottom of the hydraulic reservoir is securely inserted.

6 opens the fluid filler access door, unscrews the filler cap, and fills the reservoir with MIL-O-5606 hydraulic fluid, using the hydraulic fluid transfer pump. 1 watches the hydraulic fluid level gage to determine when the reservoir is full.

7 unpacks and cleans the hydraulic power quick-disconnect plug, the two hydraulic hose lines, and the electric cable and hydraulic hose supports. The electric cable support has the open eyebolts for supporting the cable clamp during operation while the hydraulic hose support has the closed eyebolts for supporting the hydraulic hoses during operation.

6 installs the corner brace on the lower tube member of the support.

6 installs the upper member into the lower member. Make sure the eyebolts on the upper and lower members are on the same side of the supports.

6 and 7 fasten and adjust the corner brace on the upper member so that the upper member points a little above the horizontal.

The weight of the hydraulic hoses and electric cables, when installed on each support, will spring each upper member downward to a horizontal level.

**1, 6,** and **7** install the assembled cable and hose supports into their respective sockets on the test stand and fasten the hydraulic hose support on the right side and the electric cable support on the left side (facing the front of the test stand).

**6** and **7** remove the caps from the hydraulic pressure and return line connections at the top right rear of the test stand and connect the hose lines. Make sure that the arrows on the sides of the hoseline check valves agree with the flow through the test stand connections. The pressure-line check valve will have its arrow pointing toward the quick-disconnect plug connection; the return-line check valve will have its arrow pointing away from the plug (fig. 236).

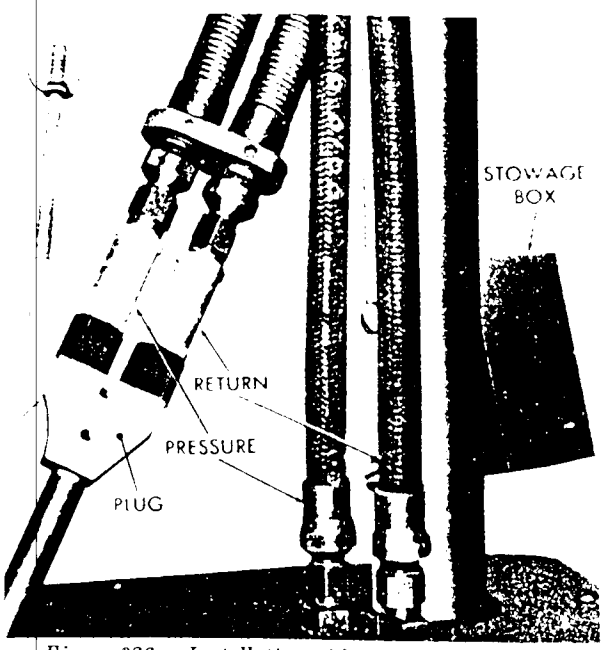


*Figure 236. Installation of hydraulic hose lines.*

**6** installs the quick-disconnect plug on the hydraulic hose and torques the connections at the quick-disconnect plug and at the test stand to 270 to 300 inch-pounds.

**7** removes the power cable from the cable compartment on the right-hand end of the test stand.

**1,** assisted by **4,** pressurizes the accumulator to 650±25 psi with dry air by proceeding as follows:

*a.* Open the manual bypass valve (counterclockwise).

*b.* Remove the valve cap.

*c.* Attach the air-filling chuck from the dry air or nitrogen source.

*d.* Loosen the swivel nut one-half to one complete turn counterclockwise (fig. 237).

*e.* Charge the accumulator to the proper pressure (650±25 psi). Watch the accumulator air-pressure gage to determine when the proper air pressure is obtained.

*f.* Tighten the swivel nut. Torque to 50 to 70 inch-pounds.

*g.* Remove the air-filling chuck from the valve. Replace and tighten the valve cap fingertight.

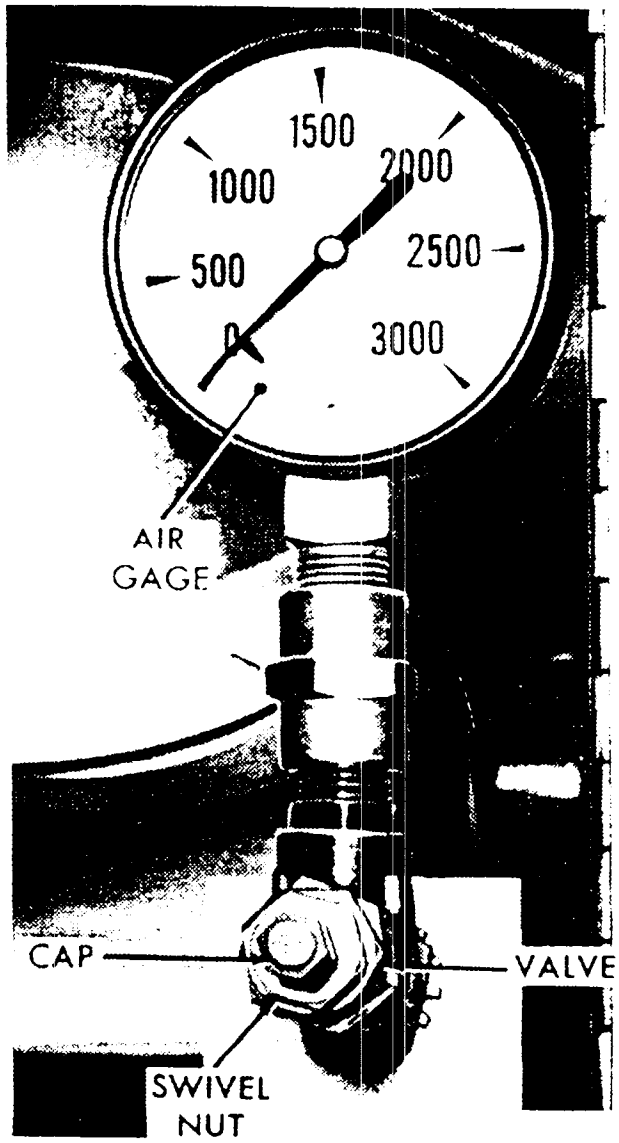


*Figure 237. Accumulator filler valve.*

*h.* Close the manual bypass valve by turning it completely clockwise.

## 466. Complete Electrical Test Set

(fig. 238)

**2, 3,** and 8 remove the rf test set from its weatherproof container.

3 and 8 place the rf test set on the left side of the top of the hydraulic test stand.

8 fastens the holding strap between the test stand and the rear of the rf test set.

**2, 3,** and 8 remove the electrical test set from its carrying case and place the test set on the top of the hydraulic test stand on the left-hand side and next to the rf test set.

8 fastens the holding strap between the test stand and the rear of the electrical test set.

2 removes the stagnation pressure pump from the missile electrical test set case and places it near the test stand.

**2, 3,** and 8 connect the cables and flexible waveguide as shown in table L. The cables are located in the test equipment case. Figure 239 shows the location of the cables in the cable clamp. The red band on the cables indicates the proper place to fasten the cables in the clamp.

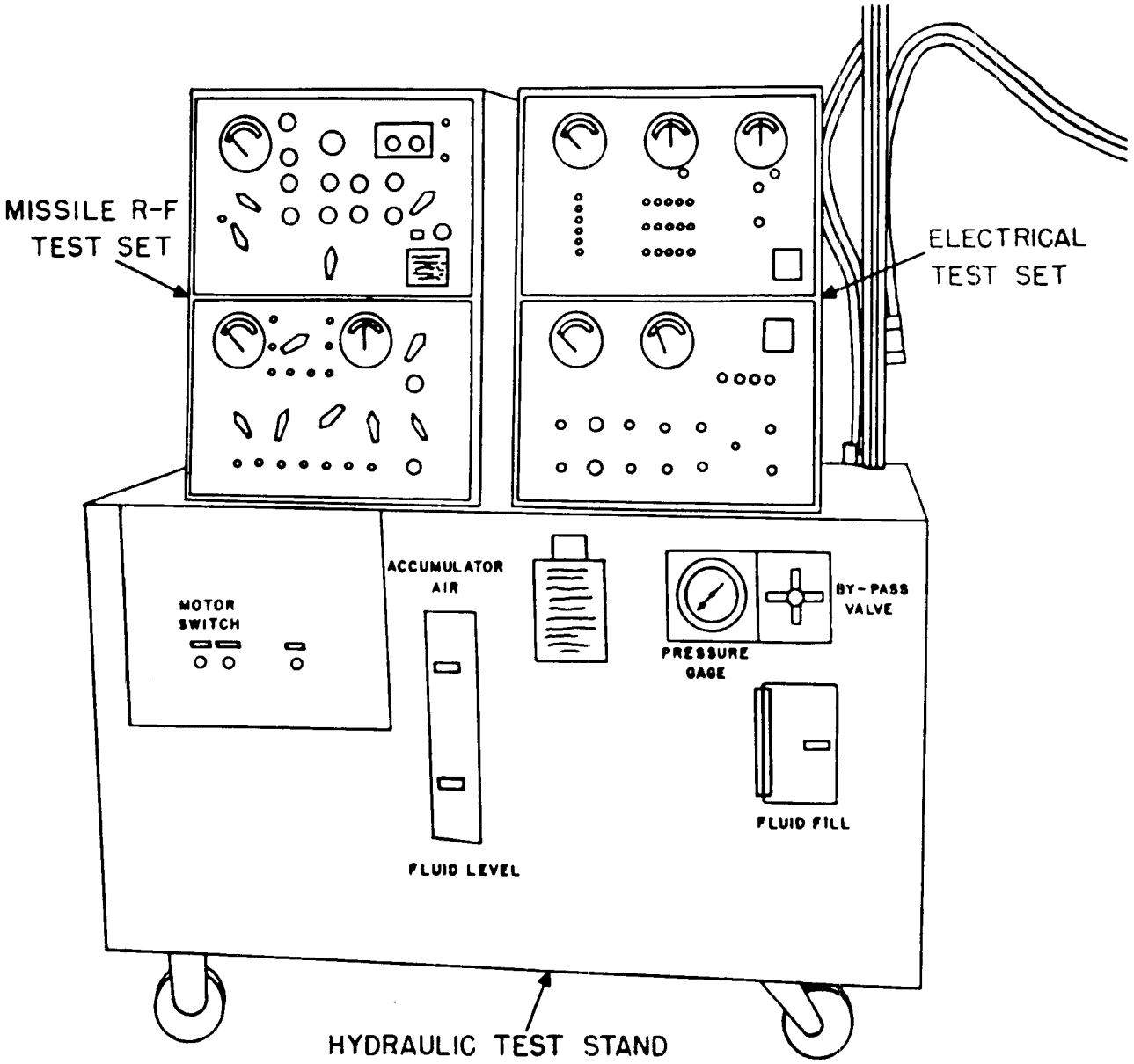


*Figure 238. Electrical test equipment installed.*

*Table L. Cable Connections*

| Cable | From— | To— |
|---|---|---|
| RF test cable | J6, test power control unit | Burst indicator jack, rf test set. |
| Power cable | Power source | J5, test power control unit. |
| Power cable | Power source | 120-volt, 400-cycle jack, rf test set. |
| Ground power cable | J2, test power control unit | Clamp on end of electric cable support. |
| Antenna switching relays cable | Waveguide jack, rf test set | Clamp on end of electric cable support. |
| Battery simulator cable | J1, test power control unit | Clamp on end of electric cable support. |
| Missile test cable | J8, test control unit | Clamp on end of electric cable support. |
| Blower cable | J12, test power control unit | Clamp on end of electric cable support. |
| Flexible waveguide | RF test set | Clamp on end of electric cable support. |

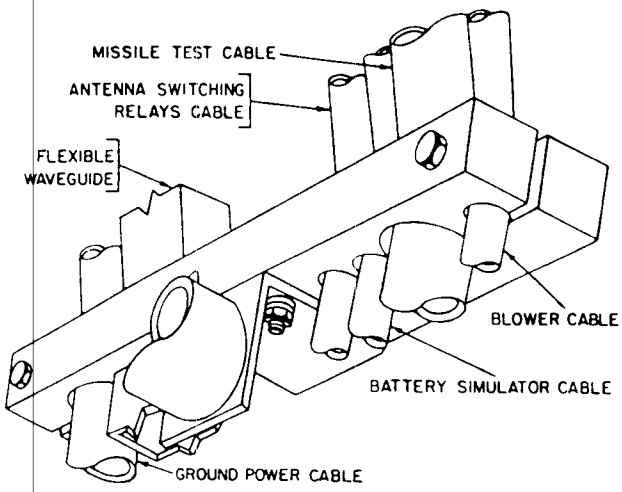


*Figure 239. Location of cables in clamp.*

## 467. Missile Battery Charging Rack

**5**, using the crane, lifts the table top from the prime mover. **1, 6,** and **7** attach the six supporting legs (if previously removed). **5** lowers the rack to the floor.

**1, 5, 6,** and **7** place the battery chargers on the floor under the table.

**6** insures all switches are in the OFF position.

**6** opens the door of each charger by loosening the two fasteners on the right edge of the front panel. If the ac and dc cords are already connected to the terminal board, make sure the connections are tight. If the cords are not connected, **6** connects the ac power cords to the terminal marked AC (left side) and the dc power cord to the terminals marked DC (right side). **6** connects the plug marked + to the terminal marked + and − to −. See TM 11–989 for detailed instructions on the battery chargers.

**6** connects the positive and negative terminals of the 33.4-volt battery charger (float charger) to the 1 and 2 positions o the terminal strip on the underside of th table (fig. 240).

**6** connects the positive and negative term nals of the 37.3-volt charger (fast charger to the 3 and 4 positions on the termina strip on the underside of the table.

**6** inserts the male plugs of each batter charger electrical cable into the prop receptacle on the underside of the tabl These receptacles are marked FAST an FLOAT (fig. 241).

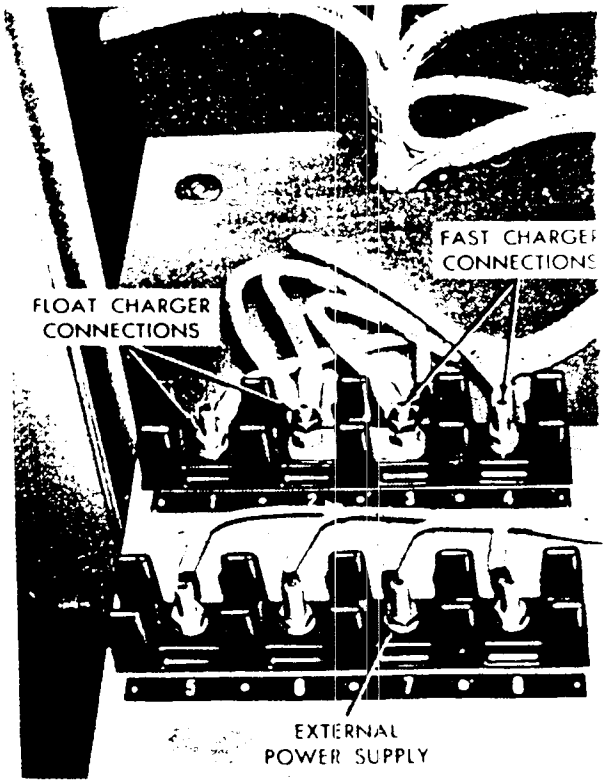


*Figure 240. Terminal strip connections.*

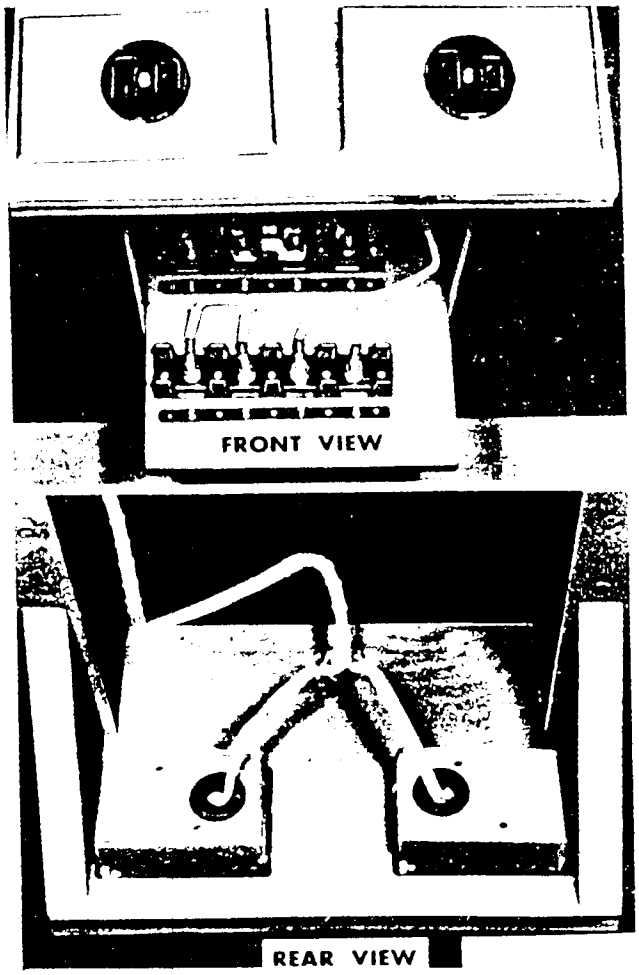


*Figure 241. Charging console receptacles.*

**6** connects the four terminal positions (5, 6, 7, and 8) to the 115-volt, 60-cycle power supply.

**6** turns both circuit breakers to the ON (up) position, and the METER SELECTOR switch to the FAST and FLOAT positions to check the two circuits, and then turns the selector switch to the OFF position.

While **6** is completing the above, **1, 5,** and **7** prepare the batteries for charging. See TM 11-5539 for a more detailed discussion on the storage batteries.

## 468. Generator

**5, 9,** and **driver** unload the generator from the prime mover.

**Driver** will drive his prime mover to the motor pool.

**9** prepares the generator for operation (ch. 4).

## 469. Report

As soon as each crew has completed the emplacement of its equipment, they will report to the area designated for receiving the crated missiles. When all crews have returned, **CS** commands FALL IN. The crews fall in at normal interval. **CS** then commands REPORT.

**1** reports HYDRAULIC TEST STAND READY.

**2** reports ELECTRICAL TEST EQUIPMENT READY.

**3** reports CHARGING RACK READY.

**4** reports COMPRESSOR READY.

**9** reports GENERATOR READY.

(No report by other crew members.)

## 470. Prepare Missile

After the reports in paragraph 469 have been received, the **CS** commands either FALL OUT or PREPARE MISSILE. FALL OUT will be given if no missile containers have been delivered to the assembly area. The crews may be directed to continue preparing the assembly area as required. As soon as a missile has been delivered, the **CS** reassembles the section, and commands PREPARE MISSILE. All personnel then proceed to prepare the missile and booster without further command. See Chapter 10 for missile and booster assembly procedure and drills.

# CHAPTER 20

# ORGANIZATIONAL MAINTENANCE OF EQUIPMENT

## 471. Equipment Lubrication and Painting

*a. Lubrication Orders.* The lubrication orders prescribe cleaning and lubrication procedures and indicate locations, intervals, and proper materials for servicing the missile-handling equipment. Lubrication orders are issued with the handling equipment and must be carried with it at all times. In the event the ground-handling equipment or individual units thereof are received without the lubrication orders, the using organization should requisition them immediately.

*b. General Lubrication Instructions.* Service intervals specified on the lubrication orders are for operation where moderate temperatures, humidity, and atmospheric conditions prevail. Under extremely corrosive conditions or when an excess of foreign material is present, it may be necessary to decrease the designed lubrication intervals. Any indication of excessive friction such as squeaks, binding, or traces of rust or corrosion should be remedied promptly regardless of the normal lubrication period.

*c. Lubrication Equipment.* Each piece of equipment is supplied with the necessary lubrication equipment. This lubrication equipment will be cleaned both before and after use. Lubrication guns will be operated carefully and in such a manner as to insure proper distribution of the lubricant.

*d. Points of Application.* Lubricating fittings, grease cups, oilholes, and the surrounding surfaces should be wiped clean before the lubricant is applied. A ¾-inch red circle should be painted around all lubricating fittings and oilholes.

*e. Reports and Records.* Unsatisfactory performance or defects in the application or effect of prescribed petroleum, lubricants, and preservative materials will be reported on DA Form 468, Unsatisfactory Equipment Report. A record of lubrication of the equipment is maintained on DA Form 460.

*f. Lubrication Under Unusual Conditions.* It is necessary to lubricate more frequently to compensate for abnormal or extreme conditions such as high temperatures, prolonged periods of operation, continued operation in sand or dust, immersion in water, or exposure to moisture. Any of these operations or conditions may cause contamination and quickly destroy the protective qualities of the lubricants. Intervals may be extended during inactive periods commensurate with adequate preservaion.

*g. Grade of Lubricant.* Lubricants are prescribed in the key in accordance with three temperature ranges: above +32° F. (0.0° C.), +40° F. to −10° F. (4.4° C. to −23.3° C.), and from 0° F. to −65° F. (−17.8° C. to −55.4° C.). The grade of lubricants should be changed whenever weather forecast data indicate that air temperatures will be consistently in the next higher or lower temperature range or when sluggish action caused by lubricant thickening occurs. No change in grade will be made when a temporary rise in temperature is encountered.

*h. Lubricant Levels.* Lubricant levels must be observed closely. Necessary steps must be taken to immediately replenish them in order to maintain proper levels at all times.

*i. Lubrication Under Dusty and Sandy Conditions.* After operation in dusty or sandy conditions, all points of lubrication should be cleaned, inspected, and relubricated as necessary.

*j. Painting and Equipment.* General instructions for painting, methods of painting, and materials to be used, are contained in TM 9–2851.

***Caution:*** Special procedures are required when painting aluminum or magnesium surfaces on the van-type trailers.

Instructions for camouflage painting are found in FM 5–20B.

## 472. Preventive Maintenance Services

Table (LI)

*a. Responsibilities and Intervals.* Preventive maintenance services are the responsibility of the using organization. They consist generally of services required before, during, and after operation, and daily, weekly, and monthly services. They are performed by the using personnel

Prescribed intervals between services are based on a normal 5-hour-day operation and are reduced under abnormal operation or severe conditions. Intervals during inactive periods may be extended accordingly. Preventive maintenance procedures should be coordinated with general instructions given in TM 9–2810.

*b. Operator or Crew Maintenance.* To insure efficiency, it is necessary that the missile-handling equipment be inspected systematically at intervals each day it is operated at least once each week. Defects should be corrected before they result in serious damage or failure. Certain scheduled maintenance services will be performed at designated intervals. Any defects or unsatisfactory operating characteristics beyond the scope of the operator or crew to correct must be reported at the earliest opportunity to the individual in charge. The services set forth in table LI are those performed by the operator or crew before, during, and after operation and daily, weekly, and monthly. This table prescribes the minimum services only.

*c. Before-Operation Preventive Maintenance.* Before-operation services are performed on the handling equipment to ascertain whether or not conditions have changed since the last after-operation service. Many things can happen to equipment between the last check and the time it is used again, and a check is necessary before the equipment is put into operation. The before-operation services should never be omitted even in extremely critical tactical situations.

*d. During-Operation Preventive Maintenance.* The during-operation services consist of detecting improper performance. While in operation it is important to notice unusual noises or odors or unsatisfactory performance, and to take corrective steps before the deficiencies develop to the point of actual breakdown.

*e. After-Operation Preventive Maintenance.* The purpose of the after-operation services is to prepare the equipment for operation again on short notice. The after-operation preventive maintenance services are particularly important because at this time using personnel can thoroughly inspect the equipment to detect any deficiencies that may have developed and immediately correct those they are permitted to correct. Any defects or troubles should be reported promptly to the section leader or other designated person. If this check is performed thoroughly, the equipment will be ready for immediate use on short notice. The after-operation maintenance should never be entirely omitted but may be reduced to the fundamental services.

*f. Periodic Preventive Maintenance.* The daily, weekly, and monthly preventive maintenance services supplement the after-operation services and focus additional attention on certain designated items, including general tightening, cleaning, and lubrication, if required. The weekly and monthly checks should include detailed inspections by the section leader and the battery commander on the quality of maintenance performed.

*Table LI. Organizational Maintenance Checklist*

| Component | POINT | INTERVALS | | | | | | | PROCEDURE |
|---|---|---|---|---|---|---|---|---|---|
| | | Before operation | During operation | After operation | Daily | Weekly | Monthly | Before traveling | |
| ENTIRE SYSTEM | Assembly | X | ---- | ---- | X | ---- | ---- | ---- | Check all parts to see that they are correctly assembled and that all latches, hinges, fasteners, etc., are properly secured. |
| | Cables | ---- | ---- | ---- | X | ---- | ---- | ---- | Check for damaged cables or connectors. |
| | System checks | ---- | ---- | ---- | X | ---- | ---- | ---- | Complete daily system checks. |
| | Cleaning | X | ---- | ---- | X | ---- | ---- | ---- | Check all exposed surfaces for dirt and grit. Clean as required. |
| | Controls, switches, and knobs. | X | ---- | ---- | X | ---- | ---- | ---- | Check for damaged items. Report damage to ordnance maintenance personnel. |
| | Operating faults | ---- | ---- | X | ---- | X | ---- | ---- | Investigate and report any faults noted during operation. |
| | Lubrication | ---- | ---- | ---- | ---- | ---- | ---- | ---- | Lubricate items as specified in lubrication orders. |

*Table LI. Organizational Maintenance Checklist*—Continued

| Component | POINT | INTERVALS | | | | | | | PROCEDURE |
|---|---|---|---|---|---|---|---|---|---|
| | | Before operation | During operation | After operation | Daily | Weekly | Monthly | Before traveling | |
| ENTIRE SYSTEM | Lubrication orders, log sheets, and manuals. | ---- | ---- | ---- | ---- | ---- | X | X | See that manuals, log sheets, and lubrication orders are properly stored. See applicable Department of Army supply catalog for available publications. |
| | Operation general | ---- | X | ---- | ---- | ---- | ---- | ---- | When equipment is warming up and during operation, be alert for any sounds, smells, or visible indications of trouble. |
| | Log sheets | X | X | X | X | X | X | ---- | See that all notations are recorded in their proper places on log sheets. |
| | Sliding surfaces | X | ---- | ---- | X | ---- | ---- | ---- | Check for freedom of movement and absence of rust or sand. Report sticking parts. |
| LAUNCHER | Taillight assembly | ---- | ---- | ---- | ---- | X | ---- | X | Operate lights if tactical situation permits. Visually inspect reflectors. |
| | Electrical junction box | X | ---- | ---- | X | ---- | ---- | ---- | Visually inspect fuses, power switches, cables, and cable connectors with the power on. Check operation of blower. |
| | Storage box | ---- | ---- | ---- | X | ---- | ---- | ---- | Visually inspect storage box. |
| | Erecting rail bumpers | ---- | ---- | ---- | ---- | X | ---- | ---- | Visually inspect erecting rail bumpers. |
| | Running gear | ---- | ---- | ---- | ---- | X | ---- | X | Apply both handbrakes, then the electric brakes, and check their operation. |
| | Jacks | X | ---- | X | X | ---- | ---- | ---- | Check jacks to see that they are firmly positioned and have not shifted. |
| | Launcher-loader assembly | X | ---- | ---- | X | ---- | ---- | ---- | Perform prelaunch tests, checking operation of missile check stations, hydraulic power packages, junction box, operating panel, and erecting arm. |
| | Launcher loudspeaker | X | ---- | ---- | X | ---- | ---- | ---- | Check operation. |
| | Lunette | ---- | ---- | ---- | ---- | X | ---- | X | Visually inspect lunette and safety chains. |
| | Missile testing hydraulic power package. | X | ---- | ---- | X | ---- | ---- | ---- | Visually inspect oil level, pressure gages, and controls. |
| | Launcher hydraulic erecting power package. | X | ---- | ---- | X | ---- | ---- | ---- | Visually inspect oil level, accumulator pressure gage, and controls. |
| | Launcher operating panel | X | ---- | ---- | X | ---- | ---- | ---- | Visually inspect switches, meters, cables, and cable connectors. |
| | Launcher arm | ---- | ---- | ---- | ---- | X | ---- | ---- | Depress rail indexing pin and check its operation. |
| | Hydraulic plumbing | X | X | X | ---- | ---- | ---- | ---- | Check for damaged or leaking pipes or fittings. |
| | Storage racks | X | ---- | ---- | X | ---- | ---- | ---- | Check rack pins, flag stops, and float assemblies to see that they are securely installed. |
| | Storage rack tracks | X | ---- | ---- | ---- | X | ---- | ---- | Check alinement and adjustment of track sections with connecting rack. |
| | Storage rack ground stakes | ---- | ---- | ---- | X | ---- | ---- | ---- | Check ground stake and grounding cable to make sure that they are securely installed. ***Warning:*** Do not attempt to operate system unless ground stake is connected. |
| | Storage rack test stations | X | ---- | ---- | X | ---- | ---- | ---- | Check mounting brackets, electric cables and connectors, hydraulic hoses and couplings. Insure jumper hoses are coupled together at inactive stations. Inspect hydraulic selector valve. |
| | All tires | ---- | ---- | ---- | ---- | X | ---- | X | Gage tires for correct pressure. Remove penetrating objects such as nails or glass. Note any apparent loss of air, unusual wear, or missing valve caps. |

*Table LI. Organizational Maintenance Checklist*—Continued

| Component | POINT | INTERVALS | | | | | | | PROCEDURE |
|---|---|---|---|---|---|---|---|---|---|
| | | Before operation | During operation | After operation | Daily | Weekly | Monthly | Before traveling | |
| LAUNCHING SECTION | Control cabinet | X | | | X | | | | Visually inspect switches, meters, cables, connectors, and fuses with power on. |
| | Power cabinet | X | | | X | | | | Visually inspect power cabinet, cables, and connectors. Turn power on and check the operation of the blower. |
| | Telephone circuits | X | | | X | | | | Check operation of all circuits. Visually inspect cords, plugs, and headsets. |
| | Main | | | | X | | | | Refill spare-fuse holders. |
| | Switch box | | | | | X | | | Inspect switches, fuses, terminal blocks, cables, and connectors. |
| | Telephone circuits | X | | | X | | | | Check operation of all circuits. Visually inspect cords, plugs, telephone set subassemblies and connecting stations, and cables and connectors. |
| LAUNCHING CONTROL TRAILER | Control console | X | | | X | | | | Visually inspect switches, meters, fuses, panel lights, and cables and connectors, with power on. |
| | Responder mast | | | | | X | | | Check responder and mast. |
| | Ground rod | | | | | X | | | Check that ground rod and ground cable are securely installed. Do not attempt to operate the system unless ground rod is connected. |
| | Siren | | | | X | | | | Test operation of siren, if tactical situation permits. |
| | Protector strip | | | | X | | | | Clean ground electrodes on protector strip. Replace defective protectors. Inspect cables and connectors. |
| | Switchboard | X | | | | | | | Check keys, plugs, cords, and switchboard lights and drops. Check headset. |
| BATTERY CONTROL AND RADAR CONTROL TRAILERS | All consoles | X | | | X | | | | Visually inspect switches, meters, fuses, panel lights, and cables and connectors, with power on. |
| | Ground rod | | | | X | | | | Check ground rod and ground cable to make sure they are securely installed. Do not attempt to operate system unless ground rod is connected. |
| | Siren | | | | X | | | | Test operation of siren, if tactical situation permits. |
| | Switchboard | X | | | | | | | Check keys, plugs, cords, and switchboard lights and drops. Check headset. |
| | Telephone circuits | X | | | X | | | | Check operation of all circuits. Visually inspect cords, plugs, telephone set subassemblies and connecting stations, cables, and connectors. |

# APPENDIX I

# REFERENCES

| | |
|---|---|
| AR 55-225 | Transportation of Explosives and Other Dangerous Articles. |
| SR-385-310-5 | Launching Guided Missiles and Heavy Rockets. |
| DA PAM 108-1 | Index of Army Motion Pictures, Television Recordings, and Filmstrips. |
| DA PAM 310- , series | Military Publications (as applicable). |
| SR 320-5-1 | Dictionary of United States Army Terms. |
| AR 700-38 | Unsatisfactory Equipment Report. |
| SR 320-50-1 | Authorized Abbreviations. |
| FM 5-20 | Camouflage, Basic Principles. |
| FM 5-25 | Explosives and Demolitions. |
| FM 21-5 | Military Training. |
| FM 21-8 | Military Training Aids. |
| FM 21-30 | Military Symbols. |
| FM 24-20 | Field Wire Technique. |
| TB 10-277 | Protective Clothing for Handlers of Guided Missile Fuels and Oxidizers. |
| TM 5-5072 | Generator Set, Portable, GED, 30-KW, 120/208-240/416-volt, AC, 3 phase, 400-cycle, 4-wire, Hobart Model HF-30G (less engine). |
| TM 5-5166 | Engine, Gasoline, Continental, Model M330. |
| TM 9-1900 | Ammunition, General. |
| TM 9-2810 | Tactical Motor Vehicle Inspections and Preventive Maintenance Services. |
| TM 9-2851 | Painting Instructions for Field Use. |
| TM 9-2855 | Instruction Guide: Operation and Maintenance of Ordnance Materiel in Extreme Cold (0° to −65° F.). |
| TM 11-989 | Charger, Battery, PP775/U, PP775 A/U. |
| TM 11-2202 | Manual Telephone Switchboard SB-22/PT. |
| TM 11-5069 | Battery Test Set 737/U. |
| TM 11-5539 | Storage Battery, BB-401/U. |
| GM 51/8 | Glossary of Guided Missile Terms. |
| Letter, ORDDW-NMP | File No. 451.3, Redstone Arsenal, 4 June 1954, subject: "Removal and Preparation of Nike I Undercarriages." |
| ORD M-7-224 | Ordnance Safety Manual. |

# APPENDIX II

# DESTRUCTION OF MATERIEL

## 1. General

Procedure for the destruction materiel, including authority, destruction areas, precautions, methods available, plans, training, and procedures for special types of equipment, are contained in FM 5-25. The principles and procedures in FM 5-25 apply to the Nike I system. This appendix will therefore discuss only those items not covered in FM 5-25. If time permits, the contents of the trailers should be destroyed before destroying the trailers.

## 2. Battery Control Trailer

Completely destroy by smashing and burning both the computer servo cabinet which contains the servos and their associated potentiometer cards, and the computer amplifier cabinet which contains the majority of the computer circuitry.

## 3. Radar Control Trailer

Completely destroy by smashing and burning the radar range and receiver cabinet. This cabinet contains units required for the operation of both the target-tracking and missile-tracking radars. Destroy all duplicate units existing in this cabinet, such as the two range unit assemblies and the two angle-error detectors.

## 4. Tracking Radar Antenna Trailers

Destroy the target-track rf units in both trailers. These units are mounted behind the rf horns on each antenna. Components which are included as parts of the track antenna mounts, such as the azimuth data unit, may be quickly destroyed by placing demolition charges within the mount inclosures.

## 5. Launching Control Trailer

The classified components of the launching control trailer are contained in the launching control panel. This item requires special attention to insure complete destruction of the electronic circuits. Two 1-pound demolition charges placed behind each of the two sections will normally insure complete destruction. Smashing and burning may be used if necessary. The test responder should be lowered from the top of its mast and completely smashed and burned. It must be remembered that the test responder is the guidance section from a Nike I missile, and destruction thereof must be complete.

## 6. Launching Section Control Cabinet

The launching section control panel and the launching section power cabinet are very important from a security standpoint. These two items should be so destroyed that the electronic circuits can not be traced. Insert two 1-pound demolition charges behind the front panel of the section control panel and the section power cabinet.

## 7. Launcher-Loader Assemblies

Destruction of the missile and boosters on the launcher-loader assembly by detonating the missile warheads will be sufficient to render the launcher-loader assembly inoperable.

## 8. Missiles and Boosters

Destruction of the missiles is best accomplished by detonation of the warheads. If the warheads are not installed, smash and burn the guidance unit in each missile, and complete the destruction by inserting a demolition charge in each of the three warhead sections. If possible, the warheads should be installed for detonation purposes. On the boosters, smash the booster igniter circuit, the booster case, and the solid propellent, and then burn the booster.

# APPENDIX III

# I. GLOSSARY AND ABBREVIATIONS

## 1. Glossary

*Alert status (white, yellow, blue, or red)*—A Nike I intrabattery status used to direct the completion of specified prefiring tests, checks, and adjustments. It need not by synonymous with air raid warning conditions or conditions of readiness.

*Battle short*—A device which, when utilized, bypasses all interlocks and enables the fire unit to designate and engage targets immediately.

*Battery control area*—That area in which the battery control trailer, radar control trailer, maintenance and spares trailer, acquisition radar, missile- and target-tracking radars, radar collimation mast assembly, and engine generators are deployed.

*Battery control officer*—The officer, stationed at the battery control console in the battery control trailer, who is responsible for those parts of fire direction and fire control exercised by the Nike I battery.

*Battery control area cable system*—The cable runs required to interconnect the equipment located in the battery control area.

*Cable assembly*—A cable plus the connector at each end.

*Cable-carried net*—A communication and signaling net in which the conductors are a built-in part of the cable runs.

*Cable connector*—The mechanical devices used to connect cables to equipment or to another cable.

*Cable run*—The cable assembly or assemblies required to connect one piece of equipment to another. More than one run may be required to interconnect two pieces of equipment.

*Cage*—To mechanically lock a gyro so it will not respond to position input data.

*Designate*—A signal indication to a launching section crew that the specified launcher will be utilized to fire the next round.

*External power (missile)*—A power source not contained within the missile itself. One other than the installed missile batteries.

*Electrical boresighting adjustments*—Adjustments by which the radar beam is alined with the optical and mechanical axis of a radar.

*Fire*—The igniting of the booster igniter, as the result of which the missile is launched.

*Field wire net*—A communication and tactical signaling net which utilizes military field wire. (See Cable-carried net.)

*Fuel*—(See Propellents.)

*Interarea cable system*—The military cable runs required to connect the battery control area and the launching area.

*Interlock override*—A device by means of which an interlock or series of interlocks may be temporarily removed from a circuit.

*Internal power (missile)*—Power from the missile batteries.

*Launching area*—That area in which the launching control trailer, launching section equipment launcher-loader assemblies, and engine generators are deployed.

*Launcher-loader assembly*—A launcher plus the required number of storage racks.

*Launching area cable system*—The military cabl runs required to interconnect the equipmen deployed in the launching area.

*Launcher*—The mechanical device used to suppor a round installed on its transporting an handling rail for firing. Portions of the electrica and hydraulic components of the launche loader assembly are included as a part of launcher.

*Lift off*—That time at which the missile leaves it transporting and handling rail.

*Missile away*—That time at which the upwar motion of the missile is detected by the con puter. It does not occur at the same time a lift off.

*Missile tracked*—A signal indication that th missile-tracking radar has acquired and automatically tracking the designated missil

*Nike I round*—A Nike I missile-booster combin tion ready to fire.

*Nike I system*—All of the equipment required by a Nike I fire unit (battery) to prepare and fire a missile.

*On deck*—A signal indication that a section will be selected to fire. (See Selected.)

*On-off galvanometer trace*—A record produced by a galvanometer which is indicative only of the time of occurrence of a specified event or events. (See Quantitative galvanometer trace.)

*Propellents*—The oxidizer (inhibited red fuming nitric acid), fuel (Jp–4 or gasoline), and starting fluid (analine or unsymetrical dimethyl hydrazine).

*Quantitative galvanometer trace*—A record produced by a galvanometer which is indicative of the time and the amount of a specified event or events. (See On-off galvanometer trace.)

*Remote data*—Data originating outside of the Nike I battery which automatically determines certain happenings, such as the intrabattery status or target designation.

*Storage racks*—Welded steel truss structure used to support a missile-booster combination or round installed on a transporting and handling rail.

*Selected*—A signal indication to a launching section to complete preparation of round for firing. (See On deck.)

*Training test*—A test designed primarily to indicate the efficiency of a Nike I battery to engage a target.

*Tracking tests*—Tests designed primarily to test certain phases of the accuracy of the fire control equipment located in the battery control area.

*Target-tracked*—A signal indication that the target-tracking radar has acquired and is tracking the designated target.

*Uncage*—To unlock or free a gyro so it will respond to position input data. (See Cage.)

*Yds/10*—A control which increases the sensitivity of an associated meter by a factor of ten.

## 2. Abbreviations

| | |
|---|---|
| Acq | acquisition. |
| AFC | automatic frequency control. |
| AG | azimuth of the roll-amount gyro (measured clockwise from north). |
| AGC | automatic gain control. |
| Ant | antenna. |
| BCT | battery control trailer. |
| Blk light | blackout light. |
| Desig | designate(d). |
| DB (or db) | decibel. |
| E of P | end of paper |
| El | elevation |
| Eqpt | equipment |
| Exc | excitation |
| Fil | filament(s) |
| $G_P$ | command, in g's, transmitted to missile pitch fins. |
| Gr (1) | group 1 |
| GTC | gain time constant |
| $G_Y$ | command, in g's, transmitted to missile yaw fins. |
| $H$ | up-down distance between target and missile. Positive if target is above missile. |
| $\dot{H}_P$ | target velocity, up-down component. |
| HV | high voltage. |
| Ind | indicator. |
| IFF | indentification friend or foe. |
| Intlk | interlock. |
| IRFNA | inhibited red fuming nitric acid. |
| J 12 | jack No. 12. |
| KDP | known datum point. |
| LCT | launching control trailer. |
| LPU | launcher position unit. |
| Man-aid-auto | manual-aided-automatic. |
| M & ST | maintenance and spares trailer. |
| MTI | moving target indicator. |
| MTR | missile-tracking radar. |
| OS & C | orientation, synchronization, and collimation. |
| psi | pounds per square inch. |
| RCM | radar collimation mast assembly. |
| RCT | radar control trailer. |
| Rng | range |
| Sig sys | signal system |
| STC | sensitivity time control |
| Tel | telephone |
| Track-acq | tracking-acquisition. |
| TTR | target-tracking radar. |
| Unreg | unregulated. |
| $X$ | east-west distance between target and missile. Positive if target is east of missile. |
| $\dot{X}_P$ | target velocity, $X$ component. |
| $Y$ | north-south distance between target and missile. Positive if target is north of missile. |
| $\dot{Y}_P$ | target velocity, $Y$ component. |
| Yds/10 | yards read on meter divided 10. |

# INDEX

[AG 453.5 (3 Oct 56)]

By Order of *Wilber M. Brucker*, Secretary of the Army:

MAXWELL D. TAYLOR,
*General, United States Army,*
*Chief of Staff.*

Official:
JOHN A. KLEIN,
*Major General, United States Army,*
*The Adjutant General.*

Distribution:
*Active Army:*

| | | |
|---|---|---|
| Tec Svc, DA (1) | AAA Brig (5) | 44–112C (5) |
| Tec Svc Bd (1) | 1st GM Brig (25) | 44–145R (4) |
| Hq CONARC (18) | Gen & Br Svc Sch (2) | 44–146R (6) |
| Army AA Comd (5) | Ord GM Sch (10) | 44–147R (8) |
| Army Regional Comd (4) | AA & GM Sch (1800) | 44–445C (4) |
| MDW (1) | Units organized under following | 44–446C (6) |
| Armies (2) | TOE's: | 44–447R (8) |
| Corps (2) | 44–12R (5) | 44–448C (16) |

*NG:* Same as Active Army except allowance is one copy to each unit.
*USAR:* Same as Active Army except allowance is one copy to each unit.
For explanation of abbreviations used, see SR 320–50–1.

U. S. GOVERNMENT PRINTING OFFICE 1957 O—409893