CHAPTER 7

FINAL PREPARATION OF THE WARHEAD BODY SECTION AND THE FORWARD BODY SECTION

Section I. ELECTRICAL CABLE CONNECTIONS

7-1. Installation of the Warhead Wiring Harness

a. Secure the warhead wiring harness (4, fig. 7-1) to the warhead body section (1) as prescribed in steps *b* through *f* below.

b. Place the warhead wiring harness, emerging from rear main fin 4, (5) along the surface of the warhead body section (1), and position the wiring harness in the fin bracket (3).

c. Insert the bracket (10) and wiring harness through the opening in the warhead body section. Place the cover (15) over the opening, secure to the warhead body section with the flathead screws (16), and torque to a value of 25 pound-inches.

d. Insert the flathead screws (14) through the cover of the warhead body section (1) and bracket (10). Install the flat washers (12) and (13) and hexagon nuts (11); do not tighten. Slide the bracket forward until the wiring harness fits snugly on the warhead body section. Torque to a value of 25 pound-inches.

Note. When replacing cables, the clamps inside the missile motor section between the boot and P508 and P509 may be removed if the cable assembly is too short. After removing the clamps, repeat step *d* above.

Note. Perform step *e* below for missiles 10206 through 11935.

e. Secure the wiring harness to the warhead body section with the clamps (6), truss-head screws (7), lockwashers (8), and flat washers (9).

f. Tie the wiring harness to the fin bracket (3) with nylon cord (2).

7-2. Installation of the Transponder Control Group Wiring Harness

a. Secure the transponder control group wiring harness (6, fig. 7-2) to the warhead body section (1) as prescribed in *b* through *h* below.

b. Place the transponder control group wiring harness, emerging from rear main fin 3 (28), along the surface of the warhead body section, and position the wiring harness in the fin bracket (4).

c. Insert the bracket (13) and the wiring harness through the opening in the warhead body section. Place the cover (2) over the opening; secure to the warhead body section with the flathead screws (3); and torque to a value of 25 pound-inches.

d. Slide the bracket forward until the wiring harness fits snugly on the warhead body section; tighten the nuts (11) to a torque value of 25 pound-inches.

e. Secure the wiring harness to the bracket (22) with a clamp (27), roundhead screw (26), flat washer (21), and hexagon nut (20).

f. Secure the wiring harness to the bracket with a clamp (14), roundhead screw (18), flat washer (16), and hexagon nut (15).

Note. Perform *g* below for missiles 10206 through 11935.

g. Secure the wiring harness to the warhead body section with the clamps (7), truss-head screws (10), lockwashers (9), and flat washers (8).

h. Tie the wiring harness to the fin bracket (4) with nylon cord (5).

7-3. Installation of the Fail-Safe Control and Sequential Timer

Note. Perform *a* below for missiles 10206 through 11935. Perform *b* through *d* below for missiles 13001 and subsequent.

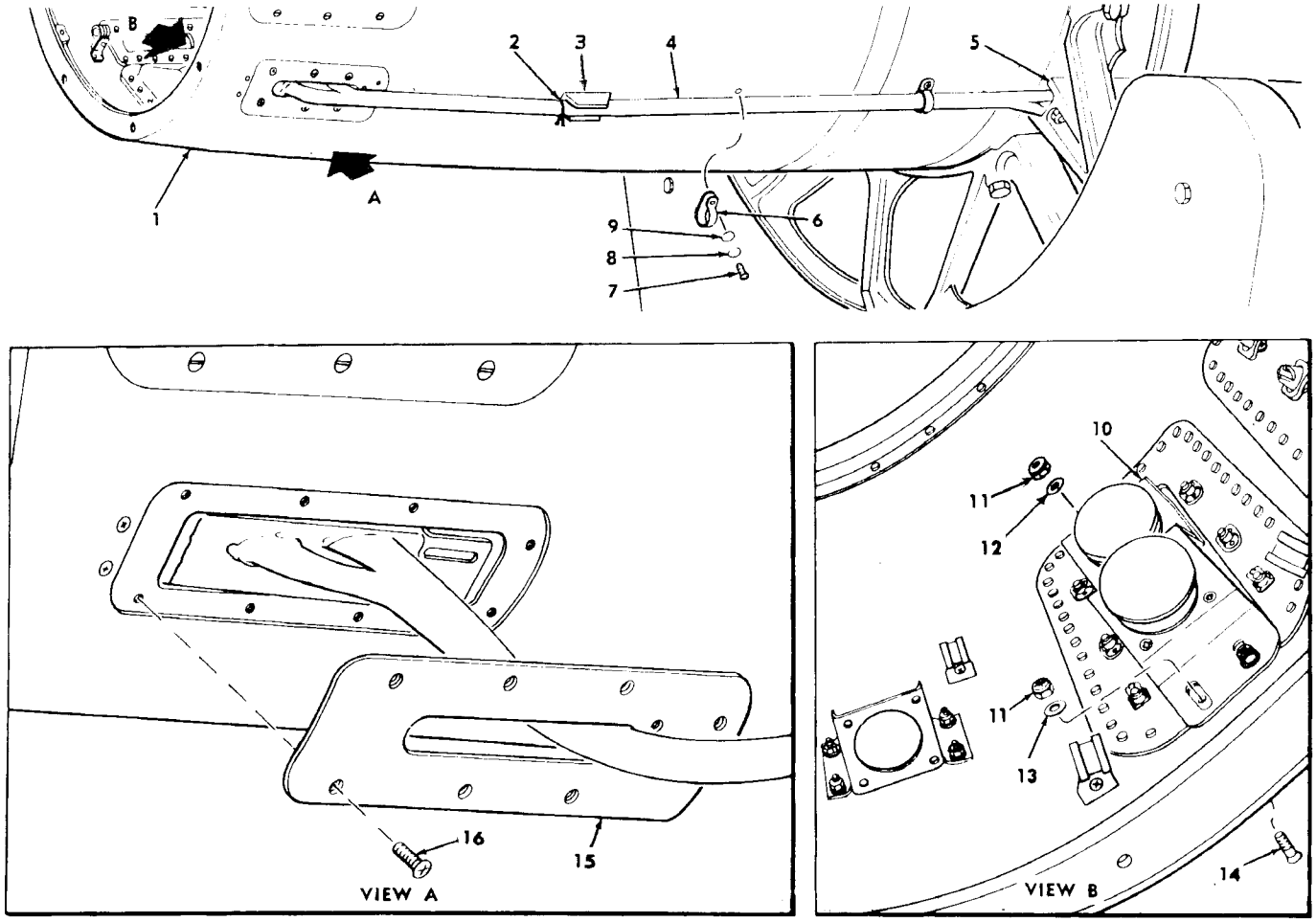

1—Warhead body section
2—Nylon cord (missiles 10206 through 11945)
3—Fin bracket
4—Warhead wiring harness
5—Rear main fin 4
6—Clamp S177096 (2) (missiles 10206 through 11395)
7—No. 8-32 X 1/2 truss-hd screw 587437 (2) (missiles 10206 through 11935)
8—No. 8 lockwasher MS35337-23 (2) (missiles 10206 through 11935)
9—0.174-in-id fl washer AN960-3L (2) (missiles 10206 through 11935)
10—Bracket
■ 11—No. 10-32 hex nut MS20364—1032A (4)
12—0.203-in-id fl washer AN960-10 (2)
13—0.203-in-id fl washer AN960-10L (2)
■ 14—No. 10-32 X 3/4 fl hd screw AN MS24693-S-274 (4)
15—Cover
16—No. 10-32 X 5/8 fl-hd screw AN507-1032R10 (8)

Figure 7-1. Removal and installation of the warhead wiring harness.

a. Loosen the captive screws (12, fig. 3-30) that secure the fail-safe control (10) to the fail-safe control bracket (11) in the forward body section. Remove the fail-safe control and the sequential timer (7).

b. Remove the round head screws (5, fig. 7-3) and flat washers (6) that secure the fail-safe and timer bracket (2) to the forward body section (9). Remove the bracket, and replace the roundhead screws (5) and flat washers (6) in the forward body section (9).

c. Loosen the captive screws (1) that secure the fail-safe control (8) to the fail-safe and timer bracket; remove the fail-safe control.

d. Remove the hexagon-head bolts (3) and flat washers (4) that secure the sequential timer (7) to the fail-safe and timer bracket. Remove the sequential timer.

e. Visually inspect the fail-safe and sequential timer for damage. Report any damage to the supervisor.

f. Check that the insulation blanket (2, fig. 7-4) is installed in the fail-safe control bracket (1) in the warhead body section (3). Position the fail-safe control (6) on the fail-safe control bracket with connector J1 (8) forward, and secure with the captive screws (7).

Note. Whichever sequential timer connector is directed to be used by higher authority must be installed in the forward position.

g. Position the sequential timer (5) next to the fail-safe control, and secure with the flathead screws (4). Torque the screws to 25 pound-inches.

7-4. Installation of the Fail-Safe Wiring Harness

a. Install the fail-safe wiring harness in the warhead body section as prescribed in (1) through (8) below.

(1) Install connector J503 (7, fig. 7-5) on the bracket (4) with the roundhead screws (3), flat washers (8), and hexagon nuts (9).

(2) Connect tranponder control group wiring harness connector P503 (16) to connector J503 (7).

(3) Connect fail-safe wiring harness connector P504 (1) to the connector on safety-and-arming device mounting plate (2).

(4) Connect fail-safe wiring harness connector P502 (3, fig. 7-6) to fail-safe control connector J1 (5), and secure by putting the latch (2) of connector P502 on the stud (4) of connector J1. Lock with safety wire (1).

(5) Connect fail-safe harness connector P511 (7) to TIMER connector J1 (8) or JUMPER connector J2 (9) on the sequential timer (10).

(6) Secure the fail-safe wiring harness (6) to the bracket (13) with a clamp (12), round head screw (11), flat washer (14), and hexagon nut (15).

(7) Secure the fail-safe wiring harness to the brackets (19) with the clamps (18), roundhead screws (20), flat washers (17), and hexagon nuts (16).

(8) Secure the fail-safe wiring harness (14, fig. 7-5) to the brackets (12) with the clamps (6, and 13), screws (5 and 15), washers (11) and hexagon nuts (10).

b. Recheck connectors P503 (16) and P504 (1) and P502 (3, fig. 7-6) and P511 (7) for positive mechanical mating.

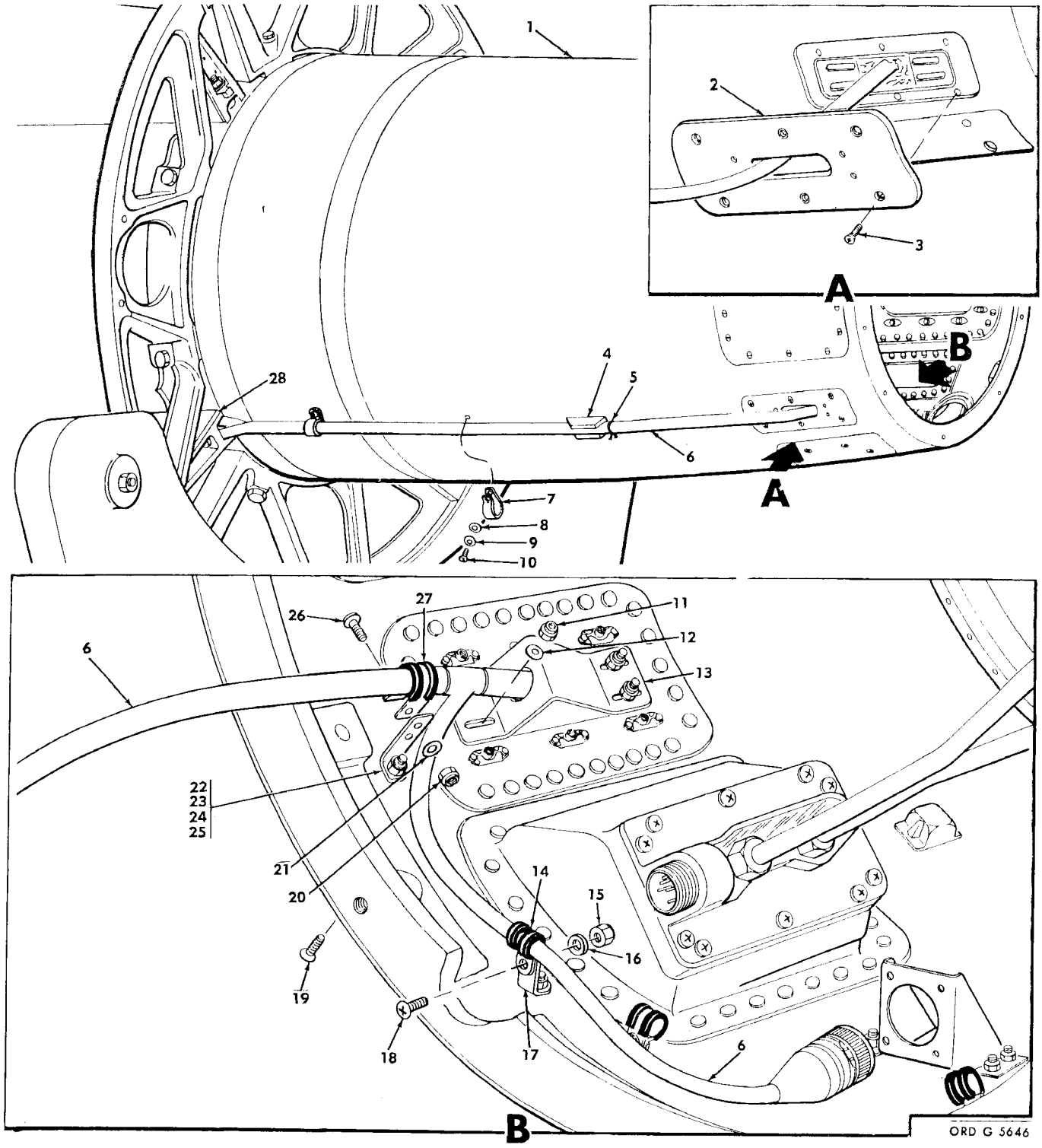

1—Warhead body section
2—Cover
3—No. 10-32 X 5/8 fl-hd screw (6)
4—Fin bracket
5—Nylon cord (missiles 10206 through 11935)
6—Transponder control group wiring harness
7—Clamp (2) (missiles 10206 through 11935)
8—0.174-in-id fl washer AN960-8L (2) (missiles 10206 through 11935)
9—No. 8 lockwasher (2) (missiles 10206 through 11935)

Figure 7-2. Removal and installation of the transponder control group wiring harness.

10—No. 8-32 X 1/2 truss-hd screw (2) (missiles 10206 through 11935)
11—No. 10-32 hex nut (4)
12—0.203-in-id fl washer AN960-10 (4)
13—Bracket
14—Clamp
15—No. 8-32 hex nut
16—0.174-in-id fl washer
17—Bracket
18—No. 8-32 X 7/16 rd-hd screw
19—No. 10-32 X 3/4 fl-hd screw
20—No. 8-32 hex nut
21—0.174-in-id fl washer
22—Bracket
23—No. 10-32 X 1/2 fl-hd screw
24—0.203-in-id fl washer
25—No. 10-32 hex nut
26—No. 8-32 X 7/16 rd-hd screw
27—Clamp
28—Rear main fin 3

Figure 7-2—Continued.

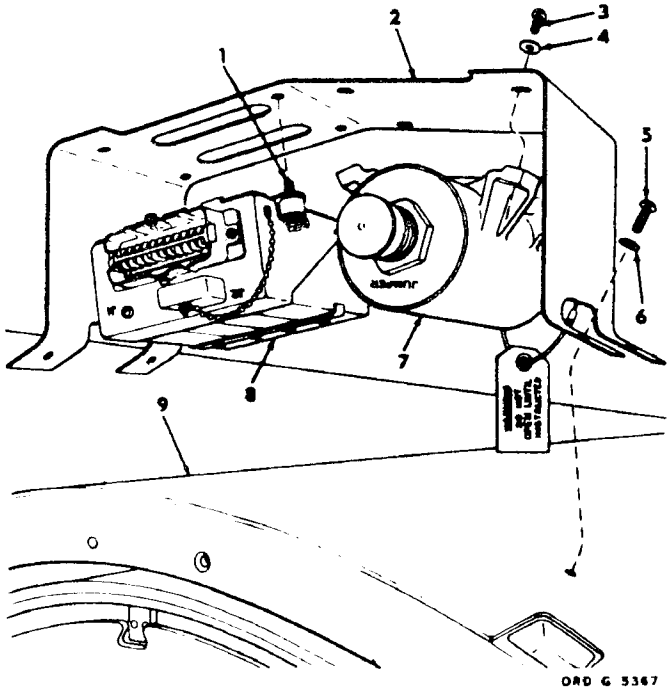

1—Captive screw (4)
2—Fail-safe and timer bracket
3—No. 10-32 X 25/32 hex-hd bolt (4)
4—0.208-in-id fl washer
5—No. 8-32 X 5/8 rd-hd screw
6—0.174-in-id fl washer
7—Sequential timer
8—Fail-safe control
9—Forward body section

Figure 7-3. Removal and installation of the fail-safe bracket (missiles 13001 and subsequent).

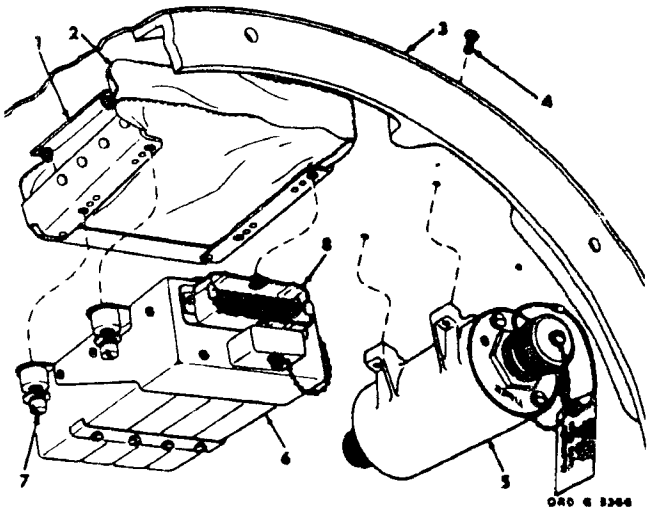

1—Fail-safe control bracket
2—Insulation blanket
3—Warhead body section
4—No. 10-32 X 7/8 fl-hd screw (4)
5—Sequential timer
6—Fail-safe control
7—Captive screw (4)
8—Connector J1

Figure 7-4. Removal and installation of the fail-safe control and sequential timer.

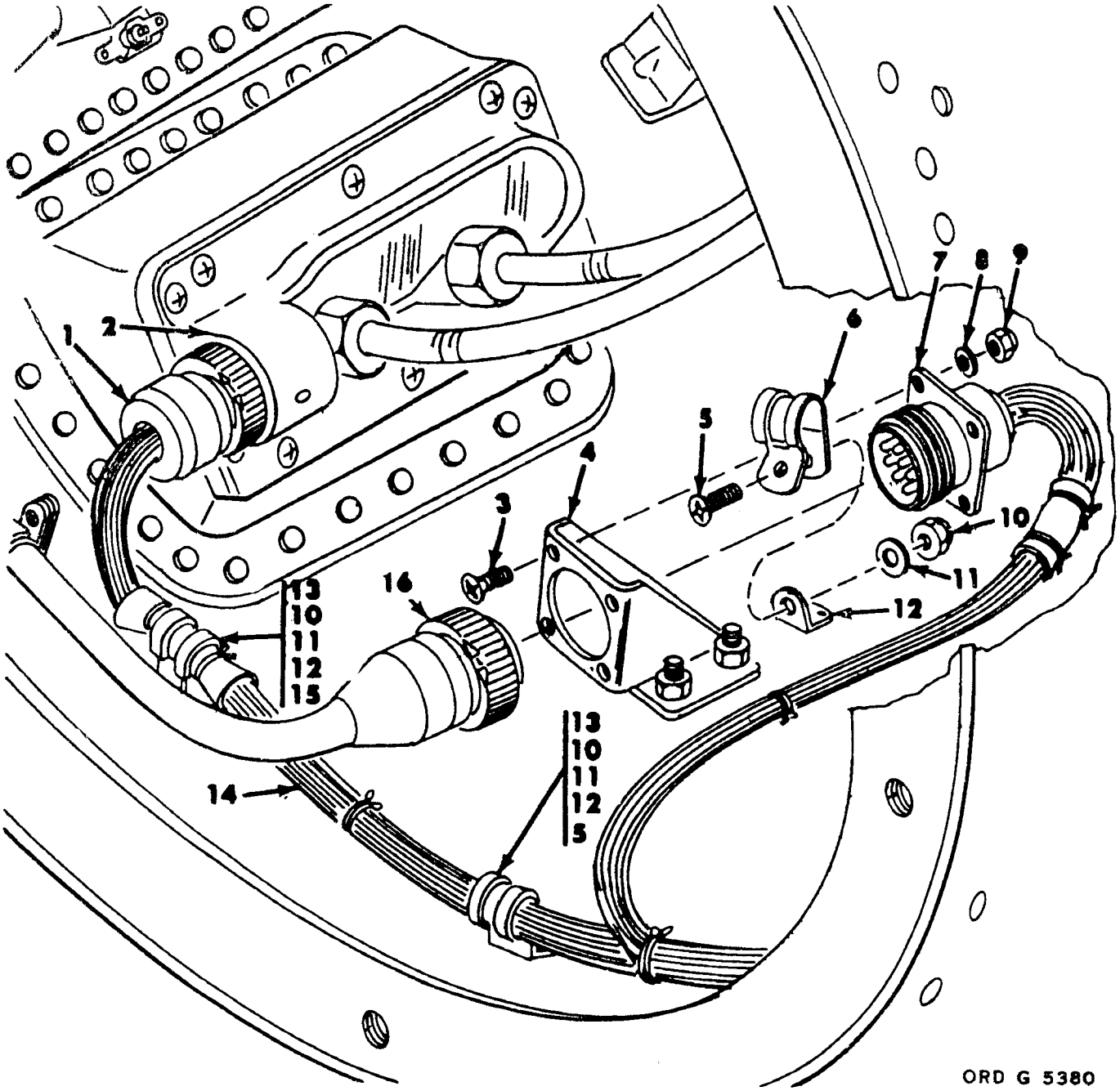

1—Connector P504
2—Safety and arming device mounting plate
3—No. 4-40 X 7/16 rd-hd screw (4)
4—Bracket
5—No. 8-32 X 1/2 rd-hd screw
6—Clamp
7—Connector J503
8—0.125-in-id fl washer (4)
9—No. 4-40 hex nut (4)
10—No. 8-32 hex nut
11—0.174-in-id fl washer
12—Bracket
13—Clamp
14—Fail-safe wiring harness
15—No. 8-32 X 7/16 rd-hd screw
16—Connector P503

Figure 7-5. Removal and installation of the fail-safe wiring harness.

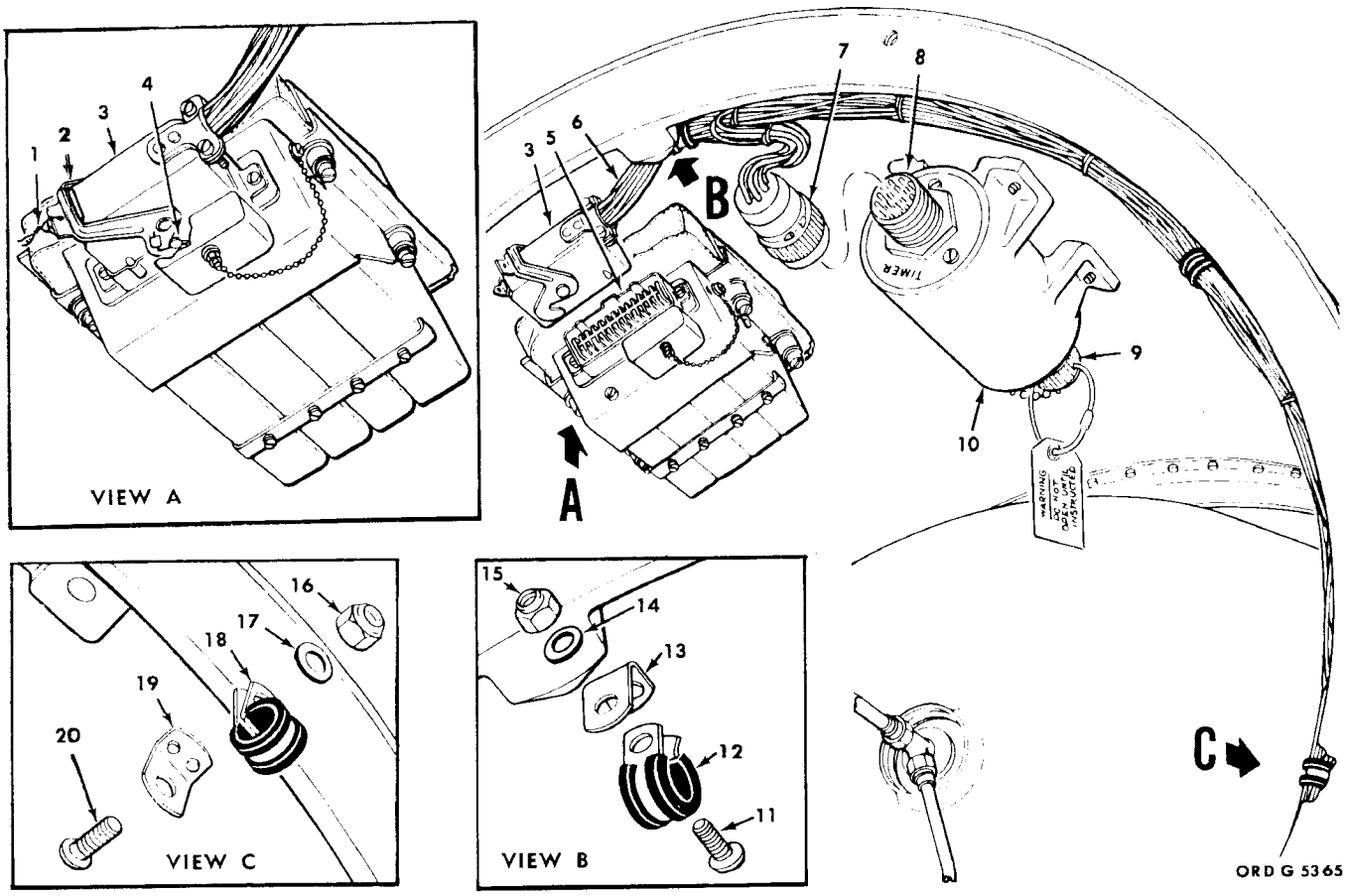

1—Safety wire
2—Latch
3—Connector P502
4—Stud
5—Fail-safe control connector J1
6—Fail-safe wiring harness
7—Connector P511
8—TIMER connector J1
9—JUMPER connector J2
10—Sequential timer
11—No. 8-32 X 1/2 rd-hd screw
12—Clamp
13—Bracket
14—0.174-in-id fl washer
15—No. 8-32 hex nut
16—No. 8-32 hex nut (2)
17—0.174-in-id fl washer (2)
18—Clamp (2)
19—Bracket (2)
20—No. 8-32 X 1/2 rd-hd screw (2)

Figure 7-6. Removal and installation of the fail-safe wiring harness.

Section II. INSTALLATION OF THE FORWARD MAIN FIN AND THE FORWARD BODY SECTION

7-5. Installation of Forward Main Fins

a. Install the forward main fin (2, fig. 7-7) on the warhead body section (1) as prescribed in (1) through (5) below.

(1) Insert the head of the hexagon-head bolt (6) in the slot in the forward main fin.

(2) Position the fin on the warhead body section; aline the hexagon-head bolt with the hole in the forward end of the warhead body section, aline the fin over the fin bracket (3); insert the hexagon-head bolt in the hole in the warhead body section.

(3) Slide the fin toward the rear of the missile until the alining pin (4) is seated in the hole in the rear main fin (5).

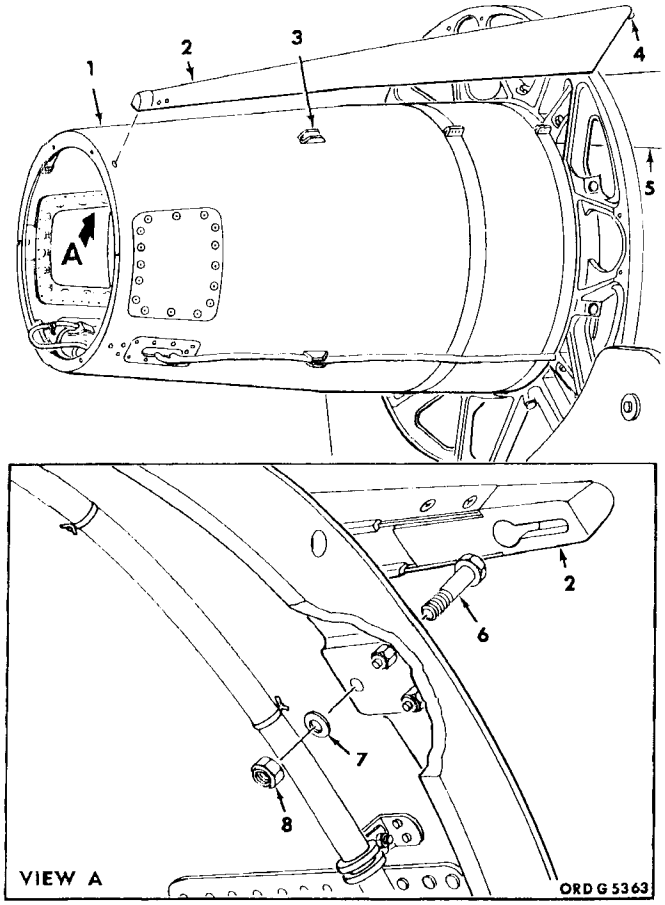

1—Warhead body section
2—Forward main fin
3—Fin bracket
4—Aligning pin
5—Rear main fin
6—5/16-24 X 1-17/32 hex-hd bolt
7—0.328-in-id fl washer
8—5/16-24 hex nut

Figure 7-7. Removal and installation of the forward main fins.

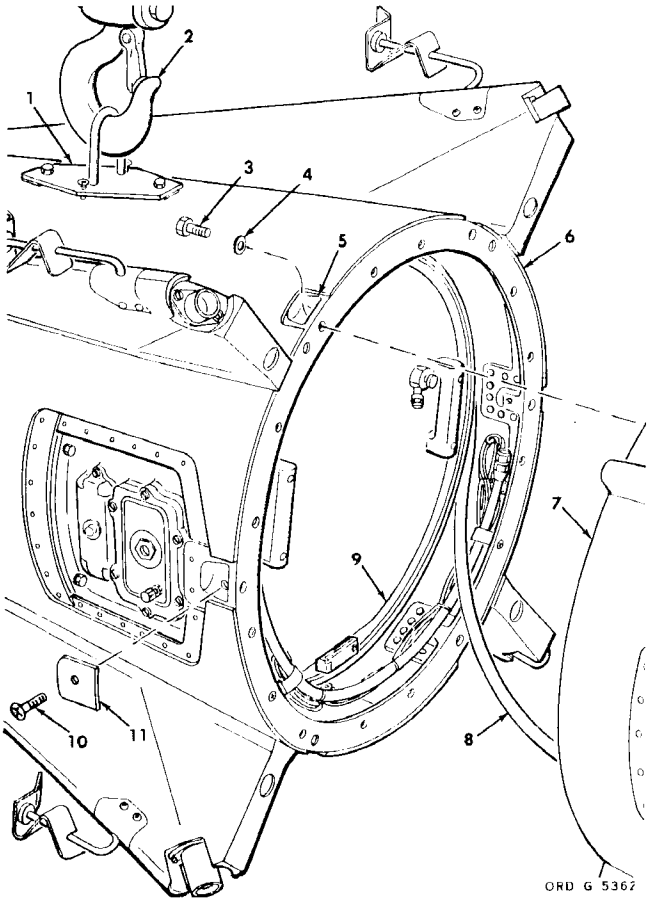

1—Forward body section hoist
2—Falling hook
3—5/16-24 X 27/32 hex-hd bolt (6)
4—0.328-in-id fl washer (6)
5—Boltwell (6)
6—Forward body section
7—Warhead body section
8—Transponder control group wiring harness
9—Transponder control group
10—No. 10-32 X 1-11/32 fl-hd screw (6)
11—Boltwell cover (6)

Figure 7-8. Removal and installation of the forward body section.

(4) Install a flat washer (7) and hexagon nut (8) on the hexagon-head bolt. Tighten the nut to the torque value given in table 15-9.

(5) Inspect the fin for gaps between the fin seal and warhead skin. A maximum gap of three-sixteenth of an inch is permissible between the bottom of the fin seal and the warhead skin.

b. Repeat the procedures in *a* above to install the three remaining forward main fins.

7-6. Installation of the Forward Body Section

a. Check the humidity indicator (4, fig. 12-2) (missiles 13001 and subsequent). The indicator color should be blue.

b. Install the forward body section (6, fig. 7-8) on the warhead body section (7) as prescribed below.

(1) Attach the falling hook (2) of a hoisting device capable of lifting 3,500 pounds to the forward body section hoist (1).

(2) Release the hand clamp (6, fig. 3-27) that secures the rear of the forward body section to the forward body section truck.

(3) Release the holddown strap that secures the front of the forward body section to the truck.

(4) Lift and position the forward body section close to the forward end of the warhead body section.

Note. Perform step (5) below for missiles 10206 through 11935.

(5) Remove the transponder control group wiring harness from the warhead body section, and place in the forward body section.

Note. Perform steps (6) through (15) below for missiles 13001 and subsequent.

(6) Insert the transponder control group wiring harness (8, fig. 7-8) between the right side of the transponder control group (9) and the forward body section. Move connector P1 (9, fig. 7-9) forward to the access opening.

(7) Remove the protective cover assembly from connector J1 (6).

(8) Position connector P1 (9, fig. 7-9) to connector J1 (6).

(9) Locate the approximate position of the support bracket (2) and clamp (5), on the wiring harness (10).

(10) Remove connector P1 from connector J1.

(11) Position the clamp around the wiring harness at the position determined in step (9) above, and assemble to the short end of the support bracket with a truss-head screw (4) and flat washer (3).

(12) Secure the support bracket to the missile skin with a flathead screw (1).

(13) Place a gasket (7) on connector J1.

(14) Connector connector P1 to connector J1.

(15) Insert a shoulder bolt (8) through connector P1, and secure the connector to connector J1.

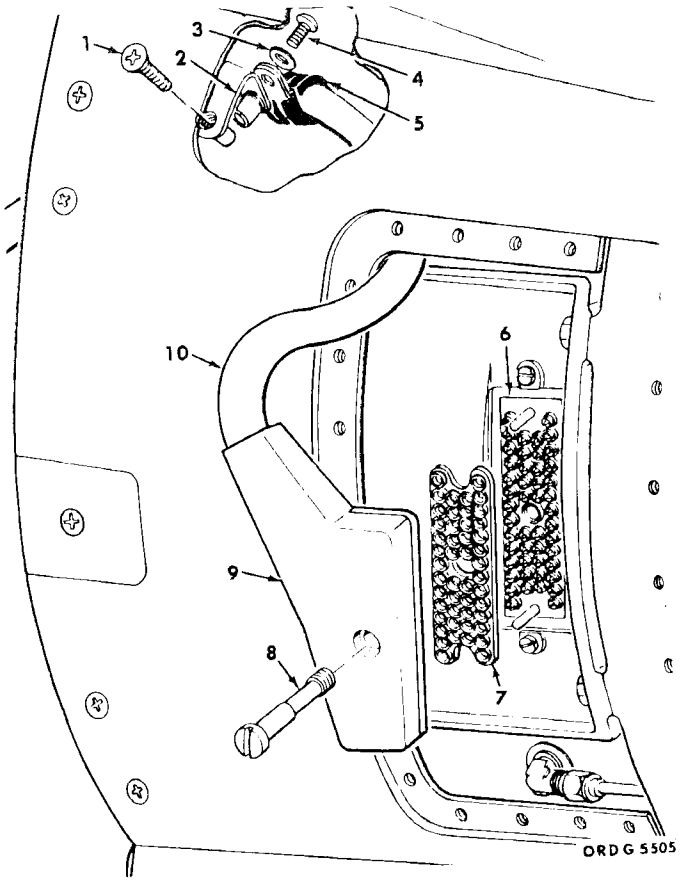

1—No. 8-32 X 1/2 fl-hd screw
2—Support bracket
3—0.174-in-id fl washer
4—No. 8-32 X 5/8 truss-hd screw
5—Clamp
6—Connector J1
7—Gasket
8—1/4-28 X 1-13/16 shoulder bolt
9—Connector P1
10—Transponder control group wiring harness

Figure 7-9. Removal and installation of the transponder control group wiring harness.

CAUTION: Exercise care to prevent damage to the wiring harness while mating the forward body section to the warhead body section in step (16) below.

(16) Mate the forward body section (6, fig. 7-8) to the warhead body section (7), and insert the hexagon-head bolts (3) and flat washers (4) into the boltwells (5) in the forward body section.

(17) Following the sequence in figure 7-10, tighten the hexagon-head bolts to a torque value of 90 pound-inches.

(18) Remove the tension from the forward body section hoist (1, fig. 7-8).

(19) Following the sequence in figure 7-10, loosen the hexagon-head bolts one at a time, and torque to the value given in table 15-9.

(20) Install the boltwell covers over the boltwells, and secure with the flathead screws. Tighten the screws to the torque value given in table 15-9.

c. Remove the two warhead body section access cover plates (fig. 7-11) by releasing the captive fasteners.

d. Perform the safety-and-arming device grounding continuity check, using the arming mechanism ohmmeter as prescribed in steps (1) through (15) below.

Note. Prior to using the arming mechanism ohmmeter, check the battery condition by shorting the ohmmeter terminals, using both test leads. If maximum needle deflection is to the left of the 16-ohm graduation on the upper scale, the battery should be replaced. Any deflection to the right of the 16-ohm graduation should be considered a full-scale deflection when performing this test.

(1) Disconnect connector P503 (16, fig. 7-5) from connector J503 (7).

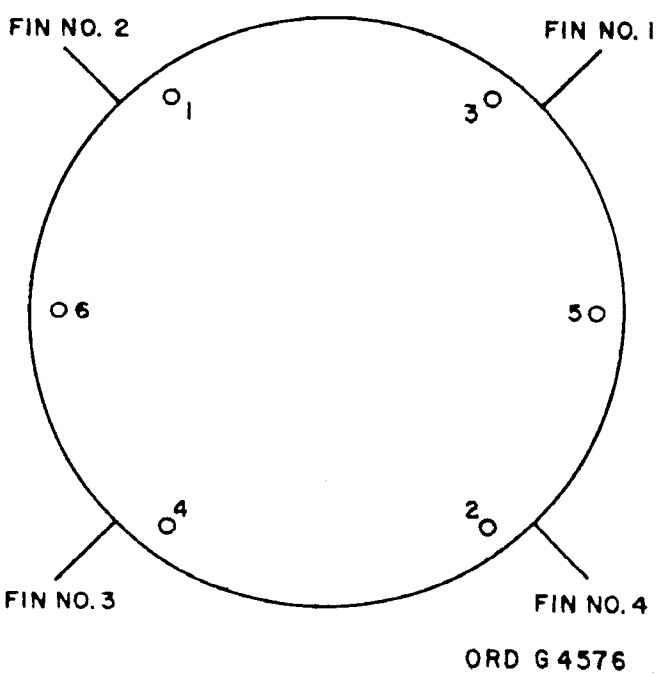

Figure 7-10. Tightening sequence of the forward body section to the forward warhead section.

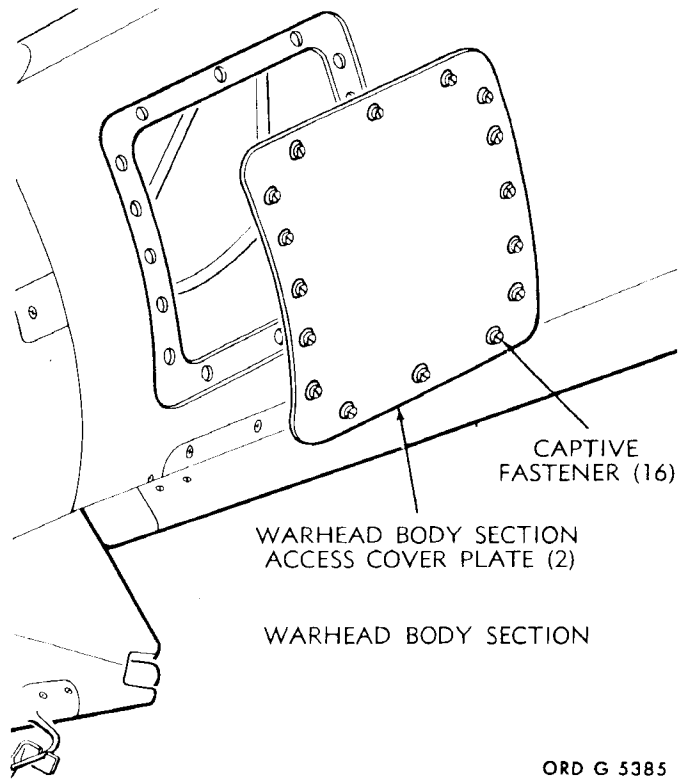

Figure 7-11. Removal and installation of the warhead body section access cover plates.

(2) Connect a test lead to each terminal post of the arming mechanism ohmmeter, using an alligator clip on the end of each test lead.

(3) Place the probe of one test lead on pin K of connector P503. Check for continuity by placing the probe of the second test lead to pin L of the same connector. The ohmmeter indicates full-scale deflection. Remove the probes.

(4) Reach through the motor section access opening, and disconnect missile umbilical cable connectors P145 and P146 (fig. 7-12) from connectors J145 and J146, respectively, on the bottom of the missile distribution box.

(5) Place the probe of one test lead on pin K of connector P503. Check for an open circuit by placing the probe of the second test lead to pin L of the same connector. The ohmmeter does not deflect. Remove the probes.

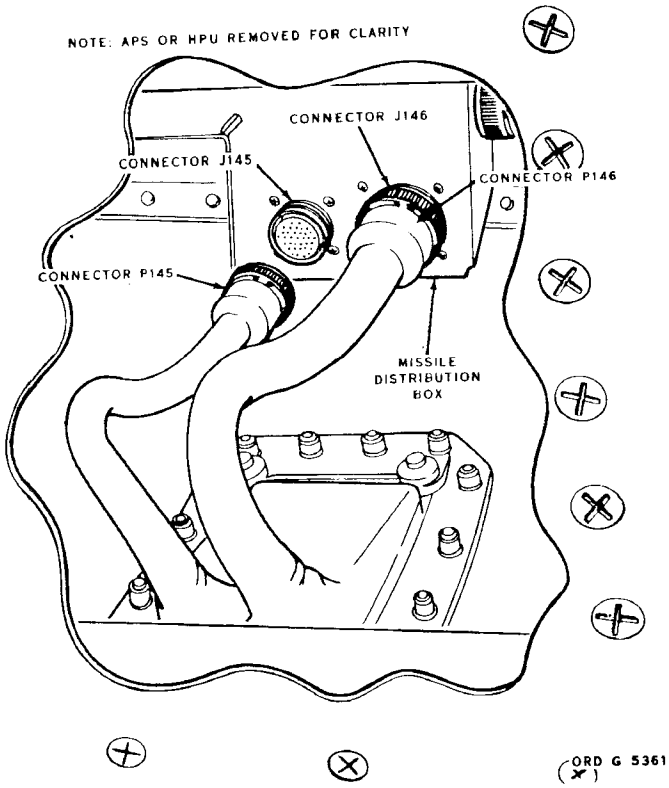

Figure 7-12. Disconnection and connection of the missile umbilical cable connectors.

(6) Connect connector P145 to connector J145 and connector P146 to connector J146.

(7) Repeat step (3) above.

(8) Disconnect fail-safe wiring connector P504 (1, fig. 7-5) from the safety-and-arming device mounting plate (2).

(9) Place the probe of one test lead on pin A of connector P504. Check for an open circuit by placing the test probe of the second test lead on pin B of the same connector. The ohmmeter does not deflect. Remove the probes.

(10) Connect connector P503 to connector J503.

(11) Place the probe of one test lead on pin A of connector P504. Check for continuity by placing the probe of the second test lead on pin B of the same connector. The ohmmeter indicates full scale deflection.

(12) Connect connector P504 to the connector on the safety-and-arming device mounting plate.

Note. Perform (13) through (15) below for missiles 10206 through 11935.

(13) Remove the protective cover assembly (4, fig. 7-13); place a gasket (5) on connector J1 (6); connect connector J1; and secure with a shoulder bolt (2).

(14) Secure the transponder control group wiring harness (1) to the bracket

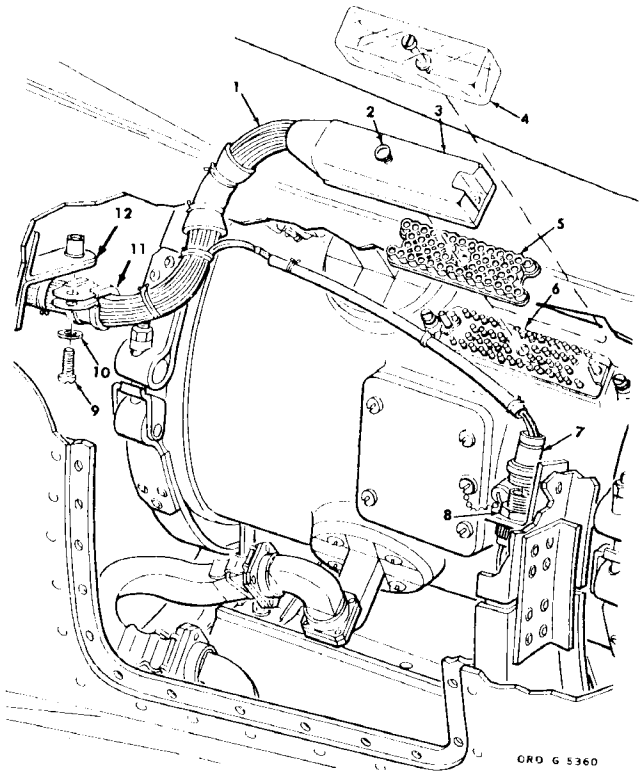

1—Transponder control group wiring harness
2—Shoulder bolt
3—Connector P1
4—Protective cover
5—Gasket
6—Connector J1
7—Connector P513
8—Connector J513
9—No. 10-32 X 1/2 truss-hd screw
10—0.203-in-id fl washer
11—Clamp
12—Bracket

Figure 7-13. Removal and installation of the transponder control group wiring harness.

(12) with a clamp (11), truss-head screw (9), and flat washer (10).

(15) Connect connector P513 (7) to connector J513 (8).

e. Recheck connector P1 (9, fig. 7-9 or 3, fig. 7-13) and P513 (7, fig. 7-13) for positive mechanical mating.

f. Disengage the falling hook (2, fig. 7-8) from the hoist (1, fig. 7-14).

g. Remove the hexagon-head bolts (3, fig. 7-14) and flat washers (2) that secure the forward body section hoist (1) to the forward body section (4); remove the forward body section hoist.

h. Remove the flathead screws (5) stored in the hoist, and install in the hoist mounting holes in the forward body section.

i. Install the flat washers and hexagon-head bolts in the forward body section hoist, and place the hoist in the forward and rear body section container.

j. Install the GUIDANCE TEST AND ADJUST ACCESS DOOR (1, fig. 3-26 or 10, fig. 3-27) on the left side of the forward body section with the flathead screws. Tighten the screws to the torque value given in table 15-9.

Caution: **On missiles 13001 and subsequent, prior to installing the J1 + XMTR ACCESS DOOR, insure that the transponder control group wiring harness is routed between the two self-locking nuts located on the upper left-hand corner of the access door opening to prevent penetration of the transponder control group wiring harness by the access door screws.**

k. Install the J1 + XMTR ACCESS DOOR (7, fig. 3-26 or 3, fig. 3-27) on the right side of the forward body section with the flathead screws. Tighten the screws to the torque value given in table 15-9.

Note. Perform *l* below for missiles 10206 through 11935.

l. Install the INERTIA SWITCH AND ADJUST ACCESS DOOR assembly (3, fig. 3-26) on the left side of the forward body section with the flathead screws. Tighten the screws to the torque value given in table 15-9.

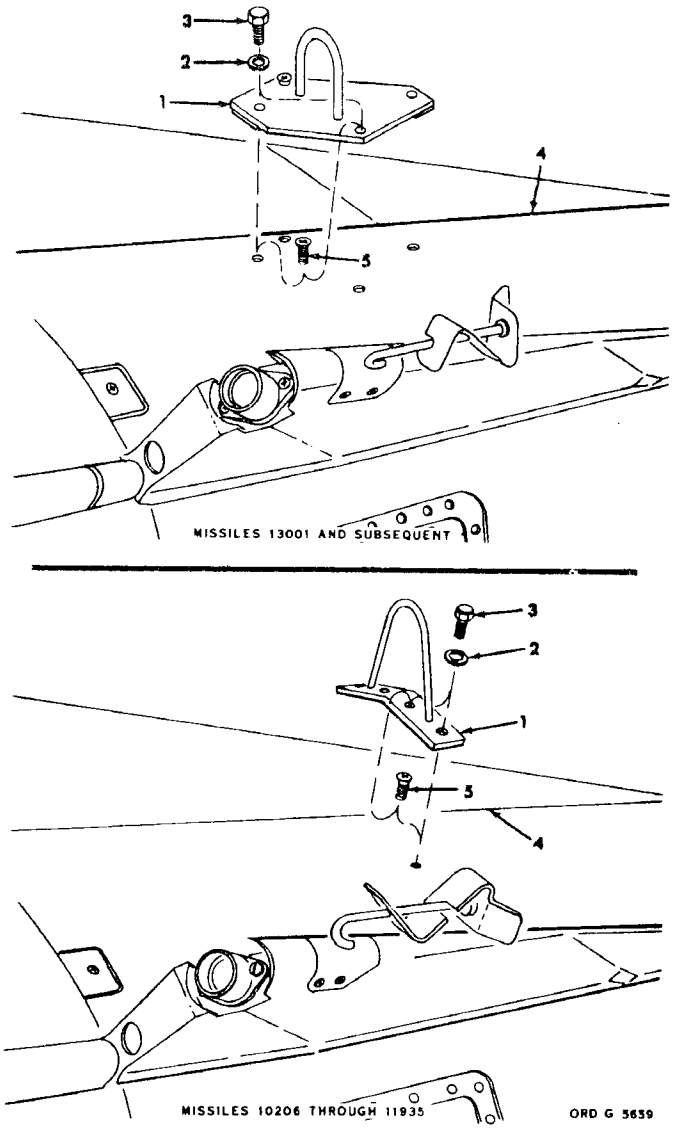

1—Forward body section hoist 9032986 (missiles 10206 through 11187) or 9028230 (missiles 11118 through 11935) or 9028292 13001 and subsequent)

2—3/8-in-id fl washer (2) (missiles 10206 through 11935) or 0.2 81-in-id fl washer (2) (missiles 13001 and subsequent)

3—1/4-28 X 7/8 hex-hd bolt (2) (missiles 10206 through 11935) or 1/4-28 X 1 hex-hd bolt (2) (missiles 13001 and subsequent).

4—Forward body section.

5—1/4-28 X 17/32 fl-hd screw (2) (missiles 10206 through 11935) or 1/4-28 X 21/32 fl-hd screw (2) (missiles 13001 and subsequent).

Figure 7-14. Removal and installation of the forward body section hoist.

m. Install the two warhead body section access cover plates (fig. 7-11) by securing with the captive fasteners.

n. Install the missile motor section access door (3, fig. 3-20) on the right side of the missile, and secure with the flathead screws. Tighten the screws to the torque value given in table 15-9.

7-7. Test of the Guidance Set Squib Battery (Missiles 13681 and Subsequent)

a. General.

(1) There are four configurations of the guidance set squib battery: BA-472/U, BA-472A/U, BA-472B/U, and BA-472C/U (7, fig. 10-3). The differences in the models lie in the heater and the heater monitor circuits.

(2) Precondition the battery to be tested to ambient temperatures below +80°F for a period of not less than four hours to insure that the heater circuit and the heat monitor circuit may be effectively tested in accordance with these procedures.

(3) The connector cap provided by MWO 11-6135-200-30/1 assures a method of accomplishing the battery electrical test with the battery squib circuit (pins I and J) properly shorted. If the connector cap (1, fig. 7-15) was not provided by MWO 11-6135-200-30/1 or not reworked as prescribed in steps (*a*) through (*c*) below, then perform steps (*a*) through (*c*) below.

(*a*) Remove the connector cap from the battery, and take the cap to a suitable work area.

(*b*) Using a no. 8 drill, drill the holes connected by the dotted lines, as illustrated in figure 7-16.

(*c*) Remove the drilled-out portion, and smooth all rough edges.

b. Visual Inspection.

(1) Remove the connector cap (1, fig. 7-15), and inspect the threads of the electrical connector for damage and foreign matter.

(2) Inspect the electrical connector for corrosion, damage, or bent pins.

(3) Inspect the base of the electrical connector for foreign matter, moisture, metal chips, and dust. Remove all traces of foreign matter. Use a small wad of cotton on a wooden probe or clean, dry air to remove foreign matter.

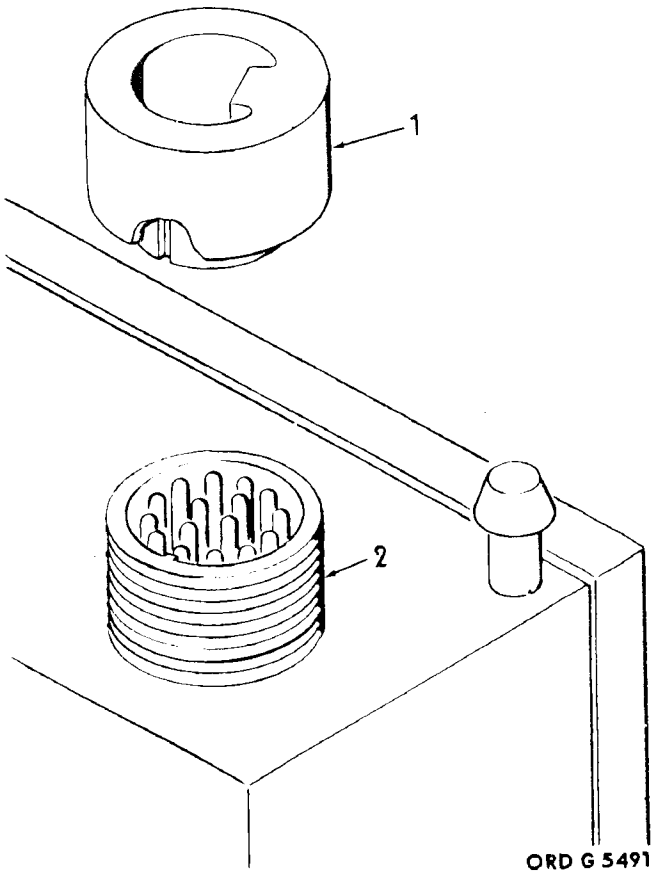

1—Connector cap 2—Electrical connector

Figure 7-15. Removal and installation of the guidance set squib battery connector cap.

(4) Inspect the base of the electrical connector for damage to the silicone rubber gasket.

(5) Clean the connector cap, and install it on the electrical connector.

(6) Inspect the exterior of the battery case for corrosion. Remove any corrosion with bronze or aluminum wool. Apply a thin coat of soft film corrosion preventive compound to the cleaned area.

c. Electrical Test.

CAUTION: **Electrical currents insufficient to cause battery activation may be large enough to desensitize the battery squib match. A current in excess of 10 milliamperes may render the squib match insensitive.**

CAUTION: Only the equipment referenced below will be used in performing the battery electrical tests.

(1) In the connector cap, use a multimeter to insure that continuity exists between I and J receptables.

(2) Assure that the connector cap (1, fig. 7-15) is properly installed in the electrical connector.

(3) With a multimeter set to the 0- to 50-volt range and the negative probe connected to pin N, determine if any potential difference exists between pins N and P. A difference in potential indicates that the battery has been activated.

(4) Set the multimeter to the RX 10000 range, and test for an open circuit between pins F and O. A closed circuit indicates the battery is defective.

(5) Set the multimeter to the RX10 range, and test for a closed circuit between pins A and L. The meter indicates full scale deflection.

(6) Measure the resistance between heater circuit pins D and E. The meter indicates 110 to 160 ohms.

(7) Measure the resistance of the heat monitor circuit pins G and H. The meter indicates 0 to 40 ohms.

(8) Set the multimeter to the RX 10000 range, and measure the resistance between the battery case and each exposed pin in turn. The meter indicates in excess of one megohm.

(9) Remove the connector cap (1, fig. 7-15) from the electrical connector (2).

CAUTION: Do not introduce current between pins I and J in performing the following tests.

(10) Measure the resistance between pins I and J to the case. The meter indicates in excess of one megohm for each pin.

CAUTION: The arming mechanism ohmmeter is to be used for establishing continuity between battery squib circuit pins I and J.

(11) Short the test leads of the ohmmeter together to determine the serviceability of the ohmmeter battery and establish a meter indication.

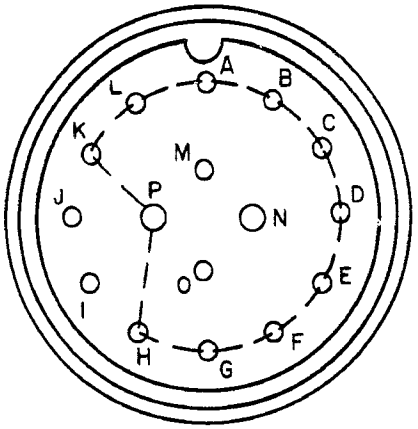

Figure 7-16. Rework of the connector cap.

Note. If the maximum needle deflection is to the left of the 16-ohm graduation on the upper scale, replace the battery. Any deflection to the right of the 16-ohm graduation should be considered a full-scale deflection when performing this test.

CAUTION: Do not allow the test leads to touch the case when performing the test.

(12) Touch the ohmmeter test leads to pins I and J. The meter indication should not be more than 1 ohm higher than the indication obtained in step (11) above.

(13) Replace the connector cap on the electrical connector.

7-8. Installation of the Guidance Set Squib Battery (Missiles 13684 and Subsequent)

a. Remove the flathead screws (7 and 9, fig. 3-21) from the equipment section access cover plate on the left side of the missile; remove the cover plate.

b. Place the guidance set squib battery (7, fig. 10-3) on the missile battery rack (10), and secure with the fillister-head screws (8) and flat washers (9). Do not connect the connector.

c. Place the hose clamp (5) on the battery drain hose (3); position the drain hose on the battery vent (6); and secure with the hose clamp.

Caution: (Deleted)
Note. (Deleted)

c.1. Ascertain that connector P540 on the mounting panel is connected to connector J540 on the missile distribution box.

***Caution:* The shorting spring across the squib circuit pins of the guidance set squib battery connector or the shorting connector on the squib battery must be removed prior to performing d below.**

***Caution:* Prior to installation of the battery in the missile, inspect the base of the electrical connector for the presence of the silicone rubber gasket. Inspect the electrical connector for the presence of moisture or foreign material on top of the silicone rubber gasket. Use a small wad of cotton on a wooden probe or clean, dry air to remove moisture or foreign material from the connector and gasket. A damaged silicone rubber gasket in the base of the electrical connector is to be removed and replaced by a serviceable gasket.**

d. Connect connector P541 to the connector on the guidance set squib battery.

e. Install the left equipment section access cover plate (8, fig. 3-21) on the left side of the missile, and secure with the flathead screws (7 and 9). Tighten the screws to the torque value given in table 15-9.

7-9. Test of the HPU Squib Battery BA-485 / U (Missiles 14965 and Subsequent)

Note. Precondition the battery at temperatures below +85°F for four hours prior to performing the electrical tests.

a. Visual Inspection.

(1) Remove the shorting dummy connector (1, fig. 10-4) from connector J544 (3).

(2) Inspect the external threads of connector J544 for damage or foreign material. Clean the threads if necessary.

(3) Inspect the interior of connector J544 for corrosion, foreign material, and bent pins.

(4) Use a small wad of cotton on a wooden probe or clean, dry air to remove all traces of foreign material.

(5) Assure that all foreign material has been removed from the interior of connector J544.

(5.1) Use a multimeter to insure continuity between C and E receptacles of the connector cap.

(6) Install the shorting dummy connector on connector J544.

(7) Inspect and clean the + and — power output terminals.

b. Electrical Tests.

***Caution:* Electrical currents insufficient to cause battery activation may be large enough to desensitize the battery squib match. A current in excess of 10 milliamperes may render the squib match insensitive.**

(1) Set the multimeter to its 0— to 50— volt range.

(2) Make certain that a potential difference does not exist between the + or — power output terminals. If a difference exists, the battery has been activated and should be rejected.

(3) Set the multimeter to the R X 10,000 range.

(4) Check for an open circuit between the + and — power output terminals. If a closed circuit is indicated, the battery has been activated and should be rejected.

(5) Remove the shorting dummy connector (1, fig. 10-4) from connector J544 (3).

***Caution:* Do not introduce current between pins C and E in performing the following tests.**

(6) Check for an open circuit between pins A and G of connector J544. A closed circuit indicates that the battery is defective and should be rejected.

(7) Check for an open circuit between pins D and F, D and J, F and J, C and case, and E and case of connector J544. Reject the battery if the resistance is less than one megohm.

(8) Check the resistance between each of the remaining pins in connector J544 and the battery case. The resistance readings should be in excess of one megohm.

(9) Set the multimeter to the R X 10 range.

(10) Measure the resistance between pins A and I. The resistance should be 0 ohms when the battery temperature is below +85°F.

(11) Measure the resistance between pins B and H. Reject the battery if the indication is not 55±5 ohms.

Caution: **The arming mechanism ohmmeter is to be used for establishing continuity between battery squib circuit pins C and E.**

(12) Short the test leads of the ohmmeter together to determine the serviceability of the ohmmeter battery and establish a meter indication.

Note. If the maximum needle deflection is to the left of the 16-ohm graduation of the upper scale, replace the battery. Any deflection to the right of the 16-ohm graduation should be considered a full-scale deflection when performing this test.

Caution: **Do not allow the test leads to touch the case when performing the test.**

(13) Touch the ohmmeter test leads to pins C and E. The meter indication should be 23±3 ohms higher than the indication obtained in step (12) above.

(14) Replace the shorting dummy connector J544.

7-10. Installation of the HPU Squib Battery (Missiles 14965 and Subsequent)

a. Remove the flathead screws (3 and 10, fig. 3-21) from the right equipment section access cover plate (2) on the right side of the missile body; remove the cover plate.

b. Remove the hexagon nuts (1, fig. 7-17), flat washers (2), spacers (7), and truss-head screws (6). Remove the ventilator assembly (5).

c. Remove the panhead screw (8), flat washer (9), and the shipping support (3), and place the shipping support in the forward and rear body section shipping container.

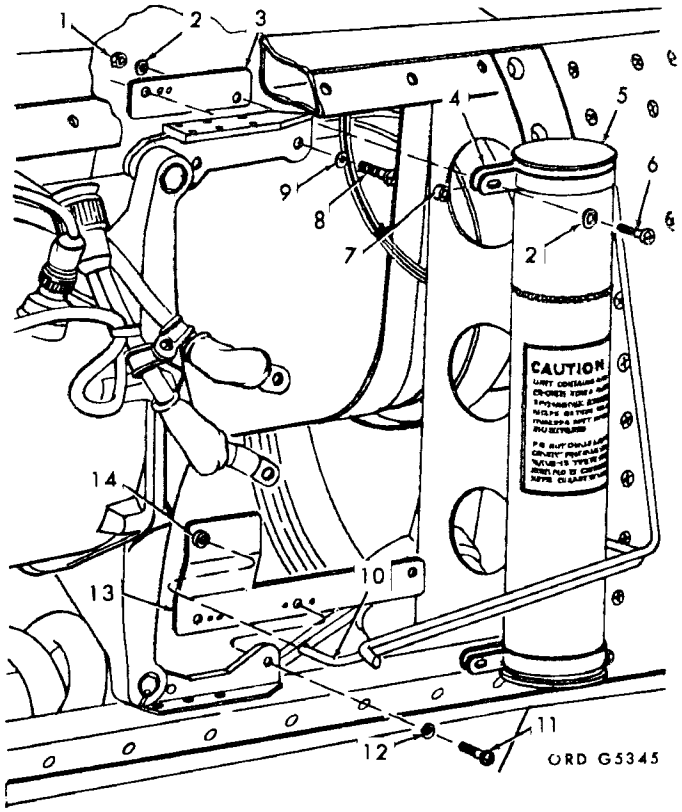

1—No. 10-32 hex nut (2)
2—0.203-in-id fl washer (4)
3—Shipping support
4—Support bracket (2)
5—Ventilator assembly
6—No. 10-32 x ⅝ truss-hd screw (2)
7—0.214 x 3/32 spacer (2)
8—¼-28 x ¾ pan-hd screw
9—0.265-in-id fl washer
10—Overflow tube
11—¼-28 x ¾ pan-hd screw (2)
12—0.265-in-id fl washer (2)
13—Shipping support
14—Grommet

Figure 7-17. Removal and installation of the shipping supports (missiles 15976 and subsequent).

d. Place the HPU squib battery (3, fig. 12-47) in the equipment section, and aline the mounting holes in the battery with the mounting holes in the missile structure.

e. Install the hexagon-head bolts (9), flat washers (10), and hexagon nuts (11) to secure the HPU squib battery to the missile structure. Tighten the bolts to the torque value given in table 15-9.

f. Place the coupling nut (7) and the sleeve (8) on the overflow tube (6) of the ventilator assembly (4).

g. Remove the shipping plug from the ventilator assembly.

h. Position the ventilator assembly on the HPU squib battery, and secure with the hexagon nuts (5), flat washers (2), and truss-head screws (1).

Note. Insure that the overflow tube is fully bottomed in the battery vent fitting before tightening the coupling nut.

i. Connect the coupling nut to the squib battery, and tighten to the torque value given in table 15-9.

j. Remove the hexagon nut (9, fig. 12-43), lockwasher (8), and flat washers (7), from the positive terminal stud (11).

k. Connect the positive lead (10) to the positive terminal stud, and secure with flat washer, lockwasher, and hexagon nut. Position the cable nipple (6) over the terminal.

l. Repeat steps *j* and *k* above to connect the negative lead (5).

Caution: (Deleted)

m. Remove the shorting dummy connector from connector J544, and connect connector P544 to J544.

CAUTION: Exercise care when installing the right equipment section access cover plate to prevent damage to the HPU squib battery overflow tube.

Note. The battery overflow tube may be misalined causing a gap between the equipment section access cover plate and the plate (5, fig. 3-21). If the misalinement cannot be corrected without damage to the tube or grommet, a gap not to exceed 1/8-inch is acceptable.

n. Install the flathead screws (3 and 10) to secure the equipment section access cover plate in position on the right side of the missile body. Tighten the screws to the torque value given in table 15-9.

Section III. INSTALLATION OF THE REAR ROLL RING

7-11. Preparation to Lift the Missile

a. Attach the missile body hoist beam (fig. 9-17) to the falling hook of a hoisting device capable of lifting 6,000 pounds.

b. Remove the self-locking retaining pins from the bracket assembly and adapter pin assemblies from the hoisting adapter.

c. Lower the missile body hoist beam into position above the handling ring segments and the missile body rear lift point.

d. Remove the eyebolt from the self-locking eyehook.

WARNING: Check that the threads of the eyebolt and the missile body rear lift point are in good condition.

e. Install the eyebolt in the missile body rear lift point.

WARNING: Check that the flange of the eyebolt is flush with the missile body.

f. Attach the self-locking eyehook to the eyebolt.

g. Lower the missile body hoist beam, and guide the hoisting adapter onto the handling ring segments.

h. Aline the pin holes in the bracket assembly with the pin holes in the upper handling ring segment, and install the two self-locking retaining pins.

i. Aline the pin holes in the hoisting adapter with the pin holes in the handling ring segment on the side of the missile body, and install the four adapter pin assemblies.

j. Raise the missile body hoist beam slightly to apply tension to the hoist beam.

k. Remove the self-locking pins that secure the handling ring segment to the rear cradle on the missile body truck, and lift the missile body enough to install the rear roll ring.

7-12. Installation of the Rear Roll Ring

a. Install the rear roll ring (fig. 3-12) on the rear body section, and secure in position with the captive bolts.

b. Lower the missile body (fig. 9-1) onto the missile body truck.

CAUTION: Make certain that the rear roll ring is fully seated in the groove of the wheels as shown in figure 3-13.

c. Lock the rear body section in position on the missile body truck with the lock pin on the forward cradle and the self-locking pins on the rear cradle of the missile body truck.

d. Lower the missile body hoist beam to release tension on the hoist beam.

e. Remove the self-locking retaining pins that attached the bracket assembly to the handling ring segment, and the adapter pin assemblies that attached the hoisting adapter to the handling ring segments.

f. Remove the self-locking eyehook from the eyebolt.

g. Remove the eyebolt from the missile body rear left point, and attach the eyebolt to the self-locking eyehook.

h. (Deleted)

i. Install the plug in the missile body rear lift point.

j. Remove the hoist beam from the missile body.

k. Install the self-locking retaining pins in the bracket assembly and the adapter pin assemblies in the hoisting adapter.